DAIKIN

ED24-631B

R-22

# Engineering Data

## Split System Air Conditioners

SkyAir

## NU-V1/Y1 series

## Cooling only [50Hz]

DAIKIN INDUSTRIES, LTD.

## Part 1 SkyAir NU series — Cooling only [50Hz] —.....1

1. External appearance .....3
2. Model name, power supply and nomenclature .....4
   2.1 Model name and power supply .....4
   2.2 Nomenclature .....5
3. Functions.....6
   3.1 NU series.....6
4. Specifications .....7
   4.1 FHC-NU.....7
   4.2 FH-NU .....10
   4.3 FDBG-NU .....12
   4.4 FDMG-NU .....13
5. Dimensions and service space .....16
   5.1 Indoor unit .....16
   5.2 Wired remote controller .....28
   5.3 Wireless remote controller.....32
   5.4 Outdoor unit.....33
   5.5 Installation service space .....37
6. Piping diagrams .....39
7. Wiring diagrams .....41
   7.1 Indoor unit .....41
   7.2 Remote controller .....45
   7.3 Outdoor unit.....46
   7.4 Field wiring .....50
8. Electric characteristics .....52
   8.1 R18NUV1 / R21NUV1 .....52
   8.2 R26NUV1 / R26NUY1 / R30NUV1 / R30NUY1.....53
   8.3 R36NUV1 / R36NUY1 / R42NUY1 / R48NUY1 / R51NUY1 / R56NUY1 .....54
9. Capacity tables.....55
   9.1 Cooling capacity .....55
   9.2 Capacity correction factor by the length of refrigerant piping .....60
10. Operation limits .....61
   10.1 Cooling only.....61
11. Fan performance.....62
   11.1 FDBG-NU .....62
   11.2 FDMG-NU .....63
12. Sound level .....66
   12.1 Overall sound level.....66
   12.2 Octave band level.....68

## Part 2 Installation of indoor / outdoor unit .....71

1. Indoor unit .....72
   1.1 FHC-NUV1 .....72
   1.2 FH-NUV1.....96
   1.3 FDBG-NUV1.....112
   1.4 FDMG-NUV1 .....117
2. Outdoor unit .....124
   2.1 R18NUV1 / R21NUV1 .....124

2.2 R26NUV1 / R26NUY1 / R30NUV1 / R30NUY1 / R36NUV1 / R36NUY1 / R42NUY1 / R48NUY1 / R51NUY1 / R56NUY1 .....129

**Part 3 Detail information of options .....145**

1. Accessories .....146
   1.1 Indoor unit .....146
   1.2 Outdoor unit.....147
2. Remote controller .....148
   2.1 BRC1C61 (for FHC-NU) — Wired remote controller .....148
   2.2 BRC1NU61 (for FH-NU) — Wired remote controller .....152
   2.3 KRC47-1A (for FDBG-NU and FDMG-NU) — Wired remote controller .....155
   2.4 KRC47-2A / KRC47-4A (for FDBG-NU and FDMG-NU) — Wired remote controller .....156
   2.5 BRC7C613W (for FHC-NU) — Wireless remote controller .....160
   2.6 BRC7NU66 (for FH-NU) — Wireless remote controller .....166
3. FHC-NU .....170
   3.1 BYC125K-W1 / BYC125K-W2 — Decoration panel .....170
   3.2 KDBHJ55K160 — Sealing member of air discharge outlet .....173
   3.3 KDBP55H160WA — Panel spacer.....175
   3.4 KDDP55D160 / KDDP55D160K — Fresh air intake kit (chamber type) .....178
   3.5 KDDJ55X160 — Fresh air intake kit (direct installation type).....182
   3.6 KAFP556D80 / KAFP556D160, KAFP557D80 / KAFP557D160 — High efficiency filter (including chamber) .....185
   3.7 KAFP552H80 / KAFP552H160, KAFP553H80 / KAFP553H160 — Replacement high efficiency filter .....188
   3.8 KDDFP55D160 — High efficiency filter chamber .....189
   3.9 KAFJ551K160 — Replacement long life filter .....192
   3.10 KAFP55D160 — Ultra long life filter unit (including chamber).....193
   3.11 KAFJ55K160H — Replacement ultra long life filter.....196
   3.12 KKSJ55K160 — Chamber connection kit.....197
   3.13 KDJ55K80 / KDJ55K160 — Branch duct chamber .....198
   3.14 KRP1B98 — Installation box for adaptor PCB .....201
4. FH-NU .....202
   4.1 KAFJ501D80 / KAFJ501D112 / KAFJ501D160 — Replacement long-life filter .....202
   4.2 KHFJ5F80 / KHFJ5F160 — L type piping kit (for upward direction) ....203
5. FDBG-NU.....204
   5.1 KKD19A1—Drain pan cover.....204
6. RU-NU.....205
   6.1 KIS95 — Drain piping kit .....205
   6.2 KKPJ5F180 — Central drain plug .....206

# Part 1



# SkyAir NU series — Cooling only [50Hz] —

## Model series

| Class | | 18 | 21 | 26 | 30 | 36 | 42 | 48 | 51 | 56 |
|---|---|---|---|---|---|---|---|---|---|---|
| Indoor unit | FHC | 18NU | 21NU | 26NU | 30NU | 36NU | 42NU | 48NU | — | — |
| | FH | — | 21NU | 26NU | 30NU | 36NU | 42NU | 48NU | — | — |
| | FDBG | 18NU | 21NU | 26NU | 30NU | — | — | — | — | — |
| | FDMG | — | — | 26NU | 30NU | 36NU | 42NU | 48NU | 51NU | 56NU |
| Outdoor unit | R | 18NU | 21NU | 26NU | 30NU | 36NU | 42NU | 48NU | 51NU | 56NU |


1. External appearance ....3
2. Model name, power supply and nomenclature ....4
   2.1 Model name and power supply ....4
   2.2 Nomenclature ....5
3. Functions ....6
   3.1 NU series ....6
4. Specifications ....7
   4.1 FHC-NU ....7
   4.2 FH-NU ....10
   4.3 FDBG-NU ....12
   4.4 FDMG-NU ....13
5. Dimensions and service space ....16
   5.1 Indoor unit ....16
   5.2 Wired remote controller ....28
   5.3 Wireless remote controller ....32
   5.4 Outdoor unit ....33
   5.5 Installation service space ....37
6. Piping diagrams ....39
7. Wiring diagrams ....41
   7.1 Indoor unit ....41
   7.2 Remote controller ....45
   7.3 Outdoor unit ....46
   7.4 Field wiring ....50
8. Electric characteristics ....52
   8.1 R18NUV1 / R21NUV1 ....52

8.2 R26NUV1 / R26NUY1 / R30NUV1 / R30NUY1 .....53
8.3 R36NUV1 / R36NUY1 / R42NUY1 / R48NUY1 / R51NUY1 / R56NUY1 .....54
9. Capacity tables .....55
9.1 Cooling capacity .....55
9.2 Capacity correction factor by the length of refrigerant piping .....60
10. Operation limits .....61
10.1 Cooling only .....61
11. Fan performance .....62
11.1 FDBG-NU .....62
11.2 FDMG-NU .....63
12. Sound level .....66
12.1 Overall sound level .....66
12.2 Octave band level .....68

# 1. External appearance



**Indoor unit**

FHC-NU

FH-NU

FDBG-NU

FDMG-NU

**Wired remote controller**

BRC1C61
(for FHC-NU)

BRC1NU61
(for FH-NU)

KRC47-1A
(for FDBG-NU, FDMG-NU)

KRC47-2A
KRC47-4A
(for FDBG-NU, FDMG-NU)

**Wireless remote controller**

BRC7C613W
(for FHC-NU)

BRC7NU66
(for FH-NU)

**Outdoor unit**

R18NUV1

R21NUV1

R26NUV1 / R26NUY1
R30NUV1 / R30NUY1

R36NUY1

R42NUY1

R48NUY1
R51NUY1

R56NUY1

# 2. Model name, power supply and nomenclature

## 2.1 Model name and power supply

| Indoor unit | Outdoor unit | Power supply |
|---|---|---|
| FHC18NUV1 | R18NUV1 | 1 phase 220-240V 50Hz |
| FHC21NUV1 | R21NUV1 | |
| FHC26NUV1 | R26NUV1 | |
| FHC30NUV1 * | R30NUV1 * | |
| FHC36NUV1 | R36NUV1 | |
| FHC26NUV1 | R26NUY1 | 3 phase 380-415V 50Hz (4 wires) |
| FHC30NUV1 * | R30NUY1 * | |
| FHC36NUV1 | R36NUY1 | |
| FHC42NUV1 | R42NUY1 | |
| FHC48NUV1 | R48NUY1 | |
| FH21NUV1 | R21NUV1 | 1 phase 220-240V 50Hz |
| FH26NUV1 | R26NUV1 | |
| FH30NUV1 * | R30NUV1 * | |
| FH36NUV1 | R36NUV1 | |
| FH26NUV1 | R26NUY1 | 3 phase 380-415V 50Hz (4 wires) |
| FH30NUV1 * | R30NUY1 * | |
| FH36NUV1 | R36NUY1 | |
| FH42NUV1 | R42NUY1 | |
| FH48NUV1 | R48NUY1 | |
| FDBG18NUV1 | R18NUV1 | 1 phase 220-240V 50Hz |
| FDBG21NUV1 | R21NUV1 | |
| FDBG26NUV1 | R26NUV1 | |
| FDBG26NUV1 | R26NUY1 | 3 phase 380-415V 50Hz (4 wires) |
| FDMG26NUV1 | R26NUV1 | 1 phase 220-240V 50Hz |
| FDMG30NUV1 * | R30NUV1 * | |
| FDMG36NUV1 | R36NUV1 | |
| FDMG26NUV1 | R26NUY1 | 3 phase 380-415V 50Hz (4 wires) |
| FDMG30NUV1 * | R30NUY1 * | |
| FDMG36NUV1 | R36NUY1 | |
| FDMG42NUV1 | R42NUY1 | |
| FDMG48NUV1 | R48NUY1 | |
| FDMG51NUV1 | R51NUY1 | |
| FDMG56NUV1 | R56NUY1 | |

**Note:**
1. * : New model or changed model
2. Power supply intake : Outdoor unit

## 2.2 Nomenclature

**Indoor unit**

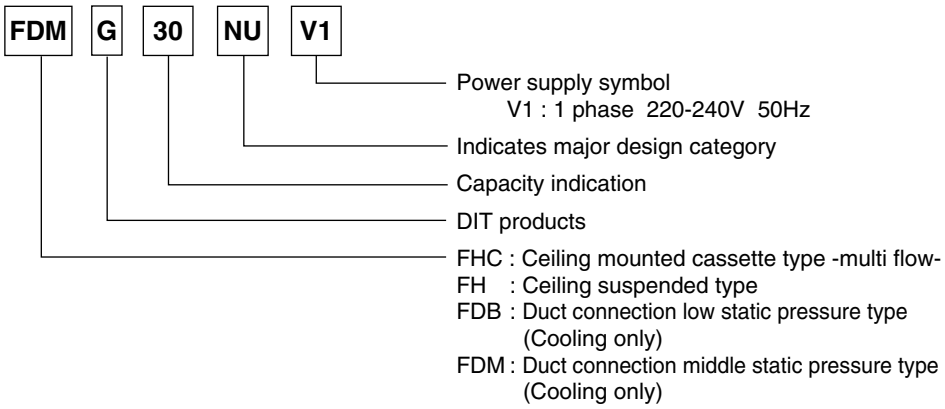


**Outdoor unit**

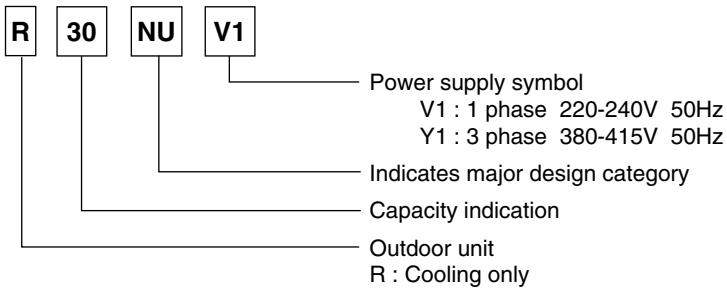

# 3. Functions

## 3.1 NU series

### FHC-NU

| Item | Feature | | Ceiling Mounted Casssete Type **(FHC-NU)** |
|---|---|---|---|
| Comfort | Auto swing | | ○ |
| | Swing pattern selection | | ○ |
| | Switchable fan speed | | ○ |
| | Program "Dry" | | ○ |
| | High ceiling application | | ○ |
| | Two selectable thermo-sensors | Wired type | ○ |
| | | Wireless type | — |
| | Timer selector | | ○ |
| Mildew prevention | Mold resistant treatment for filter | | ○ |
| Work & servicing | Drain water lift-up mechanism | | ○ |
| | Pre-charged for up to 10 m | | ○ (18~30) |
| | Pre-charged for up to 15 m | | ○ (36~48) |
| | Long-life filter | | ○ |
| | Filter sign | | ○ |
| | Ceiling soiling prevention | | ○ |
| Control features | Auto-restart | | ○ |
| | Ultra long-life filter | | ○ |
| | High-efficiency filter | | ○ |
| | Fresh air intake kit | | ○ |
| Others | PE fin for outdoor unit | | ○ |

### FH-NU

| Item | Feature | Ceiling Suspended Type **(FH-NU)** |
|---|---|---|
| Comfort | Auto swing | ○ |
| | Switchable fan speed | ○ |
| | Program "Dry" | ○ |
| | Timer selector | ○ |
| Mildew prevention | Mold resistant treatment for filter | ○ |
| | Mildew-proofing drain pan | ○ |
| Work & servicing | Pre-charged for up to 10 m | ○ (21~30) |
| | Pre-charged for up to 15 m | ○ (36~48) |
| | Long-life filter | ○ |
| Control features | Auto-restart | ○ |
| Others | PE fin for outdoor unit | ○ |

### FDBG-NU

| Item | Feature | Duct Connection Low Static Pressure Type **(FDBG-NU)** |
|---|---|---|
| Comfort | Switchable fan speed | ○ |
| Work & servicing | Pre-charged for up to 10 m | ○ (18~26) |
| Control features | Auto-restart | ○ |
| Others | PE fin for outdoor unit | ○ |
| | Adjustable external static pressure | ○ |

### FDMG-NU

| Item | Feature | Duct Connection Middle Static Pressure Type **(FDMG-NU)** |
|---|---|---|
| Comfort | Switchable fan speed | ○ |
| Work & servicing | Pre-charged for up to 10 m | ○ (26•30) |
| | Pre-charged for up to 15 m | ○ (36~51) |
| Control features | Auto-restart | ○ |
| Others | PE fin for outdoor unit | ○ |
| | Adjustable external static pressure | ○ |

○ : Functions exist.
— : No Functions

# 4. Specifications

## 4.1 FHC-NU

### Ceiling mounted cassette type

| Model | Indoor unit | | FHC18NUV1 | FHC21NUV1 |
|---|---|---|---|---|
| | Outdoor unit | V1 | R18NUV1 | R21NUV1 |
| Power supply | | | V1: 1 phase 50Hz 220-240V | V1: 1 phase 50Hz 220-240V |
| *1 *2 Cooling capacity (1) / (2) | | Btu/h | 18,100/18,000 | 21,200/21,000 |
| | | kW | 5.3/5.3 | 6.2/6.2 |
| | | kcal/h | 4,580/4,560 | 5,340/5,290 |
| **Indoor unit** | | | **FHC18NUV1** | **FHC21NUV1** |
| Dimensions | H×W×D | mm | 230×840×840 | 230×840×840 |
| Coil | Type | | Cross fin coil (Multi louver fins and Hi-XSL tubes) | Cross fin coil (Multi louver fins and Hi-XSL tubes) |
| | Row×Stages×Fin pitch | | 2×8×1.5 | 2×8×1.5 |
| | Face area | m² | 0.331 | 0.331 |
| Fan | Model | | QTS45B14M | QTS45B14M |
| | Type | | Turbo fan | Turbo fan |
| | Motor output | W | 45 | 45 |
| | Air flow rate | m³/min | (H) 15 (L) 11 | (H) 19 (L) 14 |
| Mass (Weight) | | kg | 24 | 24 |
| Piping connections | Liquid | mm | ϕ6.4 (Flare) | ϕ6.4 (Flare) |
| | Gas | mm | ϕ15.9 (Flare) | ϕ15.9 (Flare) |
| | Drain | mm | I.D.ϕ25 O.D.ϕ32 | I.D.ϕ25 O.D.ϕ32 |
| Remote controller (option) | Wired | | BRC1C61 | BRC1C61 |
| | Wireless | | BRC7C613W | BRC7C613W |
| Decoration panel (option) | Model | | BYC125K-W1 | BYC125K-W1 |
| | Colour | | White | White |
| | Dimensions (H×W×D) | mm | 40×950×950 | 40×950×950 |
| | Air filter | | Resin net (with mold resistance) | Resin net (with mold resistance) |
| | Mass (Weight) | kg | 5 | 5 |
| **Outdoor unit** | | **V1** | **R18NUV1** | **R21NUV1** |
| Colour | | | Ivory white | Ivory white |
| Dimensions | H×W×D | mm | 540×750×270 | 685×800×300 |
| Coil | Type | | Cross fin coil (HL fins and Hi-XA tubes) | Cross fin coil (HL fins and Hi-XA tubes) |
| | Row×Stages×Fin pitch | | 2×22×2.0 | 2×28×2.0 |
| | Face area | m² | 0.372 | 0.465 |
| Comp. | Model | V1 | RC70AV1TRT | NH41VMDT |
| | Type | | Hermetically sealed rotary type | Hermetically sealed rotary type |
| | Motor output | kW | 1.7 | 2.2 |
| Fan | Model | | PZ380 | PZ430 |
| | Type | | Propeller | Propeller |
| | Motor output | W | 45 | 53 |
| | Air flow rate | m³/min | 27 | 40 |
| Mass (Weight) | kg | V1 | 42 | 61 |
| Piping connections | Liquid | mm | ϕ6.4 (Flare) | ϕ6.4 (Flare) |
| | Gas | mm | ϕ15.9 (Flare) | ϕ15.9 (Flare) |
| | Drain | mm | ϕ18.0 (Hole) | ϕ18.0 (Hole) |
| Safety devices | | | Thermal protector for compressor, outdoor fan motor and indoor fan motor.<br>Fuse. | Thermal protector for outdoor fan motor and indoor fan motor.<br>Internal protector of compressor.<br>Fuse. |
| Capacity step | | % | 100-0 | 100-0 |
| Refrigerant control | | | Capillary tube | Capillary tube |
| Ref. piping | Max. length | m | 30 (Equivalent length 50m) | 30 (Equivalent length 50m) |
| | Max. height difference | m | 15 | 15 |
| Refrigerant | Model | | R-22 | R-22 |
| | Charge (factory charge) | kg | 1.20 (charged for 10m) | 1.50 (charged for 10m) |
| Ref. oil | Model | | Refer to the name plate of compressor. | Refer to the name plate of compressor. |
| | Charge | L | 0.85 | 1.20 |
| Drawing No. | | | C : 4D054418C | C : 4D054418C |

**Note:** *1. The above data are based on the following conditions.

| | Cooling | Equivalent piping length | Hz, volts |
|---|---|---|---|
| (1) | Indoor: 27°CDB, 19.5°CWB<br>Outdoor: 35°CDB, 24°CWB | 7.5m (Horizontal) | 50Hz, 220V |
| (2) | Indoor: 27°CDB, 19.0°CWB<br>Outdoor: 35°CDB, 24°CWB | 7.5m (Horizontal) | 50Hz, 220V |

*2. Capacities are net, including a deduction for cooling for indoor fan motor heat.

| Conversion formulae |
|---|
| kcal/h=kW×860<br>Btu/h=kW×3412<br>cfm=m³/min×35.3 |

## Ceiling mounted cassette type

| Model | Indoor unit | | FHC26NUV1 | FHC30NUV1 |
|---|---|---|---|---|
| | Outdoor unit | V1 | R26NUV1 | R30NUV1 |
| | | Y1 | R26NUY1 | R30NUY1 |
| Power supply | | | V1: 1 phase 50Hz 220-240V<br>Y1: 3 phase 50Hz 380-415V | V1: 1 phase 50Hz 220-240V<br>Y1: 3 phase 50Hz 380-415V |
| *1 *2 Cooling capacity (1) / (2) | | Btu/h | 26,300/26,000 | 30,400/30,000 |
| | | kW | 7.7/7.6 | 8.9/8.8 |
| | | kcal/h | 6,630/6,550 | 7,670/7,570 |
| **Indoor unit** | | | **FHC26NUV1** | **FHC30NUV1** |
| Dimensions | H×W×D | mm | 230×840×840 | 288×840×840 |
| Coil | Type | | Cross fin coil (Multi louver fins and Hi-XSL tubes) | Cross fin coil (Multi louver fins and Hi-XSL tubes) |
| | Row×Stages×Fin pitch | | 2×8×1.5 | 2×12×1.5 |
| | Face area | m² | 0.331 | 0.497 |
| Fan | Model | | QTS45B14M | QTS45A17M |
| | Type | | Turbo fan | Turbo fan |
| | Motor output | W | 45 | 90 |
| | Air flow rate | m³/min | (H) 19 (L) 14 | (H) 28 (L) 21 |
| Mass (Weight) | | kg | 24 | 28 |
| Piping connections | Liquid | mm | ϕ9.5 (Flare) | ϕ9.5 (Flare) |
| | Gas | mm | ϕ15.9 (Flare) | ϕ15.9 (Flare) |
| | Drain | mm | I.D.ϕ25 O.D.ϕ32 | I.D.ϕ25 O.D.ϕ32 |
| Remote controller (option) | Wired | | BRC1C61 | BRC1C61 |
| | Wireless | | BRC7C613W | BRC7C613W |
| Decoration panel (option) | Model | | BYC125K-W1 | BYC125K-W1 |
| | Colour | | White | White |
| | Dimensions (H×W×D) | mm | 40×950×950 | 40×950×950 |
| | Air filter | | Resin net (with mold resistance) | Resin net (with mold resistance) |
| | Mass (Weight) | kg | 5 | 5 |
| **Outdoor unit** | | V1 | **R26NUV1** | **R30NUV1** |
| | | Y1 | **R26NUY1** | **R30NUY1** |
| Colour | | | Ivory | Ivory |
| Dimensions | H×W×D | mm | 770×900×320 | 770×900×320 |
| Coil | Type | | Cross fin coil (FL fins and Hi-XA tubes) | Cross fin coil (FL fins and Hi-XA tubes) |
| | Row×Stages×Fin pitch | | 2×34×2.0 | 2×34×2.0 |
| | Face area | m² | 0.634 | 0.634 |
| Comp. | Model | V1 | NH52VNHT | NH52VNHT |
| | | Y1 | NH52YDTT | NH52YDTT |
| | Type | | Hermetically sealed rotary type | Hermetically sealed rotary type |
| | Motor output | kW | 2.5 | 2.5 |
| Fan | Model | | P47L11S | P47L11S |
| | Type | | Propeller | Propeller |
| | Motor output | W | 90 | 90 |
| | Air flow rate | m³/min | 59 | 59 |
| Mass (Weight) | kg | V1 | 70 | 70 |
| | | Y1 | 69 | 69 |
| Piping connections | Liquid | mm | ϕ9.5 (Flare) | ϕ9.5 (Flare) |
| | Gas | mm | ϕ15.9 (Flare) | ϕ15.9 (Flare) |
| | Drain | mm | ϕ26.0 (Hole) | ϕ26.0 (Hole) |
| Safety devices | | | Thermal protector for outdoor fan motor and indoor fan motor.<br>Internal protector of compressor.<br>Reverse phase protector (Y1).<br>Fuse. | Thermal protector for outdoor fan motor and indoor fan motor.<br>Internal protector of compressor.<br>Reverse phase protector (Y1).<br>Fuse. |
| Capacity step | | % | 100-0 | 100-0 |
| Refrigerant control | | | Capillary tube | Capillary tube |
| Ref. piping | Max. length | m | 30 (Equivalent length 50m) | 30 (Equivalent length 50m) |
| | Max. height difference | m | 20 | 20 |
| Refrigerant | Model | | R-22 | R-22 |
| | Charge (factory charge) | kg | 2.3 (charged for 10m) | 2.3 (charged for 10m) |
| Ref. oil | Model | | Refer to the name plate of compressor. | Refer to the name plate of compressor. |
| | Charge | L | 1.3 | 1.3 |
| Drawing No. | | | C : 4D054286C | C : 4D064415B |

**Note:** *1. The above data are based on the following conditions.

| | Cooling | Equivalent piping length | Hz, volts |
|---|---|---|---|
| (1) | Indoor: 27°CDB, 19.5°CWB<br>Outdoor: 35°CDB, 24°CWB | 7.5m (Horizontal) | 50Hz, 220V (380V) |
| (2) | Indoor: 27°CDB, 19.0°CWB<br>Outdoor: 35°CDB, 24°CWB | 7.5m (Horizontal) | 50Hz, 220V (380V) |

*2. Capacities are net, including a deduction for cooling for indoor fan motor heat.

| Conversion formulae |
|---|
| kcal/h=kW×860<br>Btu/h=kW×3412<br>cfm=m³/min×35.3 |

1

## Ceiling mounted cassette type

| Model | Indoor unit | | FHC36NUV1 | FHC42NUV1 | FHC48NUV1 |
|---|---|---|---|---|---|
| | Outdoor unit | V1 | R36NUV1 | – | – |
| | | Y1 | R36NUY1 | R42NUY1 | R48NUY1 |
| Power supply | | | V1: 1 phase 50Hz 220-240V<br>Y1: 3 phase 50Hz 380-415V | Y1: 3 phase 50Hz 380-415V | Y1: 3 phase 50Hz 380-415V |
| *1 *2 Cooling capacity (1) / (2) | | Btu/h | 36,500/36,000 | 42,700/42,000 | 49,100/48,000 |
| | | kW | 10.7/10.6 | 12.5/12.3 | 14.4/14.1 |
| | | kcal/h | 9,200/9,100 | 10,800/10,600 | 12,400/12,100 |
| **Indoor unit** | | | **FHC36NUV1** | **FHC42NUV1** | **FHC48NUV1** |
| Dimensions | H×W×D | mm | 288×840×840 | 288×840×840 | 288×840×840 |
| Coil | Type | | Cross fin coil<br>(Multi louver fins and Hi-XSL tubes) | Cross fin coil<br>(Multi louver fins and Hi-XSL tubes) | Cross fin coil<br>(Multi louver fins and Hi-XSL tubes) |
| | Row×Stages×Fin pitch | | 2×12×1.5 | 2×12×1.5 | 2×12×1.5 |
| | Face area | m² | 0.497 | 0.497 | 0.497 |
| Fan | Model | | QTS45A17M | QTS45A17M | QTS45A17M |
| | Type | | Turbo fan | Turbo fan | Turbo fan |
| | Motor output | W | 90 | 90 | 90 |
| | Air flow rate | m³/min | (H) 33 (L) 24 | (H) 33 (L) 24 | (H) 33 (L) 24 |
| Mass (Weight) | | kg | 28 | 28 | 28 |
| Piping connections | Liquid | mm | ϕ9.5 (Flare) | ϕ9.5 (Flare) | ϕ9.5 (Flare) |
| | Gas | mm | ϕ19.1 (Flare) | ϕ19.1 (Flare) | ϕ19.1 (Flare) |
| | Drain | mm | I.D.ϕ25 O.D.ϕ32 | I.D.ϕ25 O.D.ϕ32 | I.D.ϕ25 O.D.ϕ32 |
| Remote controller (option) | Wired | | BRC1C61 | BRC1C61 | BRC1C61 |
| | Wireless | | BRC7C613W | BRC7C613W | BRC7C613W |
| Decoration panel (option) | Model | | BYC125K-W1 | BYC125K-W1 | BYC125K-W1 |
| | Colour | | White | White | White |
| | Dimensions (H×W×D) | mm | 40×950×950 | 40×950×950 | 40×950×950 |
| | Air filter | | Resin net (with mold resistance) | Resin net (with mold resistance) | Resin net (with mold resistance) |
| | Mass (Weight) | kg | 5 | 5 | 5 |
| **Outdoor unit** | | **V1** | **R36NUV1** | **–** | **–** |
| | | **Y1** | **R36NUY1** | **R42NUY1** | **R48NUY1** |
| Colour | | | Ivory | Ivory | Ivory |
| Dimensions | H×W×D | mm | 1,170×900×320 | 1,170×900×320 | 1,345×900×320 |
| Coil | Type | | Cross fin coil<br>(HL fins and Hi-XA tubes) | Cross fin coil<br>(HL fins and Hi-XA tubes) | Cross fin coil<br>(HL fins and Hi-XA tubes) |
| | Row×Stages×Fin pitch | | 1×52×1.4 | 1×52×1.4 | 1×60×1.4 |
| | Face area | m² | 1.015 | 1.015 | 1.172 |
| Comp. | Model | V1 | JT125GA-V1@K | – | – |
| | | Y1 | JT125GA-Y1@K | JT160GA-Y1@K | JT170GA-Y1@K |
| | Type | | Hermetically sealed scroll type | Hermetically sealed scroll type | Hermetically sealed scroll type |
| | Motor output | kW | 3.00 | 3.75 | 4.50 |
| Fan | Model | | P47L11S | P47L11S×2 | P47L11S×2 |
| | Type | | Propeller | Propeller | Propeller |
| | Motor output | W | 90 | 65+90 | 65+90 |
| | Air flow rate | m³/min | 59 | 92 | 97 |
| Mass (Weight) | kg | V1 | 81 | – | – |
| | | Y1 | 79 | 87 | 92 |
| Piping connections | Liquid | mm | ϕ9.5 (Flare) | ϕ9.5 (Flare) | ϕ9.5 (Flare) |
| | Gas | mm | ϕ19.1 (Flare) | ϕ19.1 (Flare) | ϕ19.1 (Flare) |
| | Drain | mm | ϕ26.0 (Hole) | ϕ26.0 (Hole) | ϕ26.0 (Hole) |
| Safety devices | | | Thermal protector for outdoor fan motor and indoor fan motor.<br>High pressure switch.<br>Low pressure switch.<br>Internal protector of compressor.<br>Reverse phase protector (Y1).<br>Fuse.<br>Thermo switch (Discharge pipe). | Thermal protector for outdoor fan motor and indoor fan motor.<br>High pressure switch.<br>Low pressure switch.<br>Internal protector of compressor.<br>Reverse phase protector.<br>Fuse.<br>Thermo switch (Discharge pipe). | Thermal protector for outdoor fan motor and indoor fan motor.<br>High pressure switch.<br>Low pressure switch.<br>Internal protector of compressor.<br>Reverse phase protector.<br>Fuse.<br>Thermo switch (Discharge pipe). |
| Capacity step | | % | 100-0 | 100-0 | 100-0 |
| Refrigerant control | | | Capillary tube | Capillary tube | Capillary tube |
| Ref. piping | Max. length | m | 30 (Equivalent length 50m) | 30 (Equivalent length 50m) | 30 (Equivalent length 50m) |
| | Max. height difference | m | 20 | 20 | 20 |
| Refrigerant | Model | | R-22 | R-22 | R-22 |
| | Charge (factory charge) | kg | 2.0 (charged for 15m) | 2.4 (charged for 15m) | 2.6 (charged for 15m) |
| Ref. oil | Model | | Refer to the name plate of compressor. | Refer to the name plate of compressor. | Refer to the name plate of compressor. |
| | Charge | L | 1.4 | 1.4 | 1.4 |
| Drawing No. | | | C : 4D052554D | C : 4D052554D | C : 4D052554D |

**Note:** *1. The above data are based on the following conditions.

| | Cooling | Equivalent piping length | Hz, volts |
|---|---|---|---|
| (1) | Indoor: 27°CDB, 19.5°CWB<br>Outdoor: 35°CDB, 24°CWB | 7.5m (Horizontal) | 50Hz, 220V (380V) |
| (2) | Indoor: 27°CDB, 19.0°CWB<br>Outdoor: 35°CDB, 24°CWB | 7.5m (Horizontal) | 50Hz, 220V (380V) |

*2. Capacities are net, including a deduction for cooling for indoor fan motor heat.

| Conversion formulae |
|---|
| kcal/h=kW×860<br>Btu/h=kW×3412<br>cfm=m³/min×35.3 |

## 4.2 FH-NU

### Ceiling suspended type

| Model | Indoor unit | | FH21NUV1 | FH26NUV1 | FH30NUV1 |
|---|---|---|---|---|---|
| | Outdoor unit | V1 | R21NUV1 | R26NUV1 | R30NUV1 |
| | | Y1 | — | R26NUY1 | R30NUY1 |
| Power supply | | | V1: 1 phase 50Hz 220-240V | V1: 1 phase 50Hz 220-240V<br>Y1: 3 phase 50Hz 380-415V | V1: 1 phase 50Hz 220-240V<br>Y1: 3 phase 50Hz 380-415V |
| *1 *2 Cooling capacity (1) / (2) | | Btu/h | 21,200/21,000 | 26,300/26,000 | 30,400/30,000 |
| | | kW | 6.2/6.2 | 7.7/7.6 | 8.9/8.8 |
| | | kcal/h | 5,340/5,290 | 6,630/6,550 | 7,670/7,570 |
| **Indoor unit** | | | **FH21NUV1** | **FH26NUV1** | **FH30NUV1S** |
| Colour | | | White | White | White |
| Dimensions | H×W×D | mm | 195×1,160×680 | 195×1,160×680 | 195×1,400×680 |
| Coil | Type | | Cross fin coil<br>(Multi louver fins and Hi-XSL tubes) | Cross fin coil<br>(Multi louver fins and Hi-XSL tubes) | Cross fin coil<br>(Multi louver fins and Hi-XSL tubes) |
| | Row×Stages×Fin pitch | | 3×12×1.75 | 3×12×1.75 | 3×12×1.75 |
| | Face area | m² | 0.233 | 0.233 | 0.293 |
| Fan | Model | | 4D12K1AA1 | 4D12K1AA1 | 3D12K2AA1 |
| | Type | | Sirocco fan | Sirocco fan | Sirocco fan |
| | Motor output | W | 45 | 45 | 98 |
| | Air flow rate *3 | m³/min | (H) 22-23 (L) 19-20 | (H) 22-23 (L) 19-20 | (H) 26-27 (L) 22-23 |
| Air filter | | | Resin net (with mold resistance) | Resin net (with mold resistance) | Resin net (with mold resistance) |
| Mass (Weight) | | kg | 26 | 26 | 32 |
| Piping connections | Liquid | mm | ϕ6.4 (Flare) | ϕ9.5 (Flare) | ϕ9.5 (Flare) |
| | Gas | mm | ϕ15.9 (Flare) | ϕ15.9 (Flare) | ϕ15.9 (Flare) |
| | Drain | mm | I.D.ϕ20 O.D.ϕ26 | I.D.ϕ20 O.D.ϕ26 | I.D.ϕ20 O.D.ϕ26 |
| Remote controller (option) | Wired | | BRC1NU61 | BRC1NU61 | BRC1NU61 |
| | Wireless | | BRC7NU66 | BRC7NU66 | BRC7NU66 |
| **Outdoor unit** | | V1 | **R21NUV1** | **R26NUV1** | **R30NUV1** |
| | | Y1 | — | **R26NUY1** | **R30NUY1** |
| Colour | | | Ivory white | Ivory | Ivory |
| Dimensions | H×W×D | mm | 685×800×300 | 770×900×320 | 700×900×320 |
| Coil | Type | | Cross fin coil<br>(HL fins and Hi-XA tubes) | Cross fin coil<br>(FL fins and Hi-XA tubes) | Cross fin coil<br>(FL fins and Hi-XA tubes) |
| | Row×Stages×Fin pitch | | 2×28×2.0 | 2×34×2.0 | 2×34×2.0 |
| | Face area | m² | 0.465 | 0.634 | 0.634 |
| Comp. | Model | V1 | NH41VMDT | NH52VNHT | NH52VNHT |
| | | Y1 | — | NH52YDTT | NH52YDTT |
| | Type | | Hermetically sealed rotary type | Hermetically sealed rotary type | Hermetically sealed rotary type |
| | Motor output | kW | 2.2 | 2.5 | 2.5 |
| Fan | Model | | PZ430 | P47L11S | P47L11S |
| | Type | | Propeller | Propeller | Propeller |
| | Motor output | W | 53 | 90 | 90 |
| | Air flow rate | m³/min | 40 | 59 | 59 |
| Mass (Weight) | kg | V1 | 61 | 70 | 70 |
| | | Y1 | — | 69 | 69 |
| Piping connections | Liquid | mm | ϕ6.4 (Flare) | ϕ9.5 (Flare) | ϕ9.5 (Flare) |
| | Gas | mm | ϕ15.9 (Flare) | ϕ15.9 (Flare) | ϕ15.9 (Flare) |
| | Drain | mm | ϕ18.0 (Hole) | ϕ26.0 (Hole) | ϕ26.0 (Hole) |
| Safety devices | | | Thermal protector for outdoor fan motor and indoor fan motor.<br>Internal protector of compressor.<br>Fuse. | Thermal protector for outdoor fan motor and indoor fan motor.<br>Internal protector of compressor.<br>Reverse phase protector (Y1).<br>Fuse. | Thermal protector for outdoor fan motor and indoor fan motor.<br>Internal protector of compressor.<br>Reverse phase protector (Y1).<br>Fuse. |
| Capacity step | | % | 100-0 | 100-0 | 100-0 |
| Refrigerant control | | | Capillary tube | Capillary tube | Capillary tube |
| Ref. piping | Max. length | m | 30 (Equivalent length 50m) | 30 (Equivalent length 50m) | 30 (Equivalent length 50m) |
| | Max. height difference | m | 15 | 20 | 20 |
| Refrigerant | Model | | R-22 | R-22 | R-22 |
| | Charge<br>(factory charge) | kg | 1.5 (charged for 10m) | 2.3 (charged for 10m) | 2.3 (charged for 10m) |
| Ref. oil | Model | | Refer to the name plate of compressor. | Refer to the name plate of compressor. | Refer to the name plate of compressor. |
| | Charge | L | 1.2 | 1.3 | 1.3 |
| Drawing No. | | | C : 4D054275C | C : 4D054275C | C : 4D064593B |

**Note:** *1. The above data are based on the following conditions.

| | Cooling | Equivalent piping length | Hz, volts |
|---|---|---|---|
| (1) | Indoor: 27°CDB, 19.5°CWB<br>Outdoor: 35°CDB, 24°CWB | 7.5m (Horizontal) | 50Hz, 220V (380V) |
| (2) | Indoor: 27°CDB, 19.0°CWB<br>Outdoor: 35°CDB, 24°CWB | 7.5m (Horizontal) | 50Hz, 220V (380V) |

*2. Capacities are net, including a deduction for cooling for indoor fan motor heat.
*3. AFR (Air flow rate) is shown at 220V(380V)-240V(415V).

| Conversion formulae |
|---|
| kcal/h=kW×860<br>Btu/h=kW×3412<br>cfm=m³/min×35.3 |

1

## Ceiling suspended type

| Model | Indoor unit | | FH36NUV1 | FH42NUV1 | FH48NUV1 |
|---|---|---|---|---|---|
| | Outdoor unit | V1 | R36NUV1 | – | – |
| | | Y1 | R36NUY1 | R42NUY1 | R48NUY1 |
| Power supply | | | V1: 1 phase 50Hz 220-240V<br>Y1: 3 phase 50Hz 380-415V | Y1: 3 phase 50Hz 380-415V | Y1: 3 phase 50Hz 380-415V |
| *1 *2 Cooling capacity (1) / (2) | | Btu/h | 36,500/36,000 | 42,700/42,000 | 49,100/48,000 |
| | | kW | 10.7/10.6 | 12.5/12.3 | 14.4/14.1 |
| | | kcal/h | 9,200/9,100 | 10,800/10,600 | 12,400/12,100 |
| **Indoor unit** | | | **FH36NUV1** | **FH42NUV1** | **FH48NUV1** |
| Colour | | | White | White | White |
| Dimensions | H×W×D | mm | 195×1,590×680 | 195×1,590×680 | 195×1,590×680 |
| Coil | Type | | Cross fin coil<br>(Multi louver fins and Hi-XSL tubes) | Cross fin coil<br>(Multi louver fins and Hi-XSL tubes) | Cross fin coil<br>(Multi louver fins and Hi-XSL tubes) |
| | Row×Stages×Fin pitch | | 3×12×1.75 | 3×12×1.75 | 3×12×1.75 |
| | Face area | m² | 0.341 | 0.341 | 0.341 |
| Fan | Model | | 4D12K2AA1 | 4D12K2AA1 | 4D12K2AA1 |
| | Type | | Sirocco fan | Sirocco fan | Sirocco fan |
| | Motor output | W | 70 | 98 | 98 |
| | Air flow rate *3 | m³/min | (H) 32-34 (L) 22-24 | (H) 38-40 (L) 23-25 | (H) 42-44 (L) 24-26 |
| Air filter | | | Resin net (with mold resistance) | Resin net (with mold resistance) | Resin net (with mold resistance) |
| Mass (Weight) | | kg | 35 | 35 | 35 |
| Piping connections | Liquid | mm | ϕ9.5 (Flare) | ϕ9.5 (Flare) | ϕ9.5 (Flare) |
| | Gas | mm | ϕ19.1 (Flare) | ϕ19.1 (Flare) | ϕ19.1 (Flare) |
| | Drain | mm | I.D.ϕ20 O.D.ϕ26 | I.D.ϕ20 O.D.ϕ26 | I.D.ϕ20 O.D.ϕ26 |
| Remote controller (option) | Wired | | BRC1NU61 | BRC1NU61 | BRC1NU61 |
| | Wireless | | BRC7NU66 | BRC7NU66 | BRC7NU66 |
| **Outdoor unit** | | V1 | **R36NUV1** | – | – |
| | | Y1 | **R36NUY1** | **R42NUY1** | **R48NUY1** |
| Colour | | | Ivory | Ivory | Ivory |
| Dimensions | H×W×D | mm | 1,170×900×320 | 1,170×900×320 | 1,345×900×320 |
| Coil | Type | | Cross fin coil<br>(HL fins and Hi-XA tubes) | Cross fin coil<br>(HL fins and Hi-XA tubes) | Cross fin coil<br>(HL fins and Hi-XA tubes) |
| | Row×Stages×Fin pitch | | 1×52×1.4 | 1×52×1.4 | 1×60×1.4 |
| | Face area | m² | 1.015 | 1.015 | 1.172 |
| Comp. | Model | V1 | JT125GA-V1@K | – | – |
| | | Y1 | JT125GA-Y1@K | JT160GA-Y1@K | JT170GA-Y1@K |
| | Type | | Hermetically sealed scroll type | Hermetically sealed scroll type | Hermetically sealed scroll type |
| | Motor output | kW | 3.00 | 3.75 | 4.50 |
| Fan | Model | | P47L11S | P47L11S×2 | P47L11S×2 |
| | Type | | Propeller | Propeller | Propeller |
| | Motor output | W | 90 | 65+90 | 65+90 |
| | Air flow rate | m³/min | 59 | 92 | 97 |
| Mass (Weight) | kg | V1 | 81 | – | – |
| | | Y1 | 79 | 87 | 92 |
| Piping connections | Liquid | mm | ϕ9.5 (Flare) | ϕ9.5 (Flare) | ϕ9.5 (Flare) |
| | Gas | mm | ϕ19.1 (Flare) | ϕ19.1 (Flare) | ϕ19.1 (Flare) |
| | Drain | mm | ϕ26.0 (Hole) | ϕ26.0 (Hole) | ϕ26.0 (Hole) |
| Safety devices | | | Thermal protector for outdoor fan motor and indoor fan motor.<br>High pressure switch.<br>Low pressure switch.<br>Internal protector of compressor.<br>Reverse phase protector (Y1).<br>Fuse.<br>Thermo switch (Discharge pipe). | Thermal protector for outdoor fan motor and indoor fan motor.<br>High pressure switch.<br>Low pressure switch.<br>Internal protector of compressor.<br>Reverse phase protector.<br>Fuse.<br>Thermo switch (Discharge pipe). | Thermal protector for outdoor fan motor and indoor fan motor.<br>High pressure switch.<br>Low pressure switch.<br>Internal protector of compressor.<br>Reverse phase protector.<br>Fuse.<br>Thermo switch (Discharge pipe). |
| Capacity step | | % | 100-0 | 100-0 | 100-0 |
| Refrigerant control | | | Capillary tube | Capillary tube | Capillary tube |
| Ref. piping | Max. length | m | 30 (Equivalent length 50m) | 30 (Equivalent length 50m) | 30 (Equivalent length 50m) |
| | Max. height difference | m | 20 | 20 | 20 |
| Refrigerant | Model | | R-22 | R-22 | R-22 |
| | Charge (factory charge) | kg | 2.0 (charged for 15m) | 2.4 (charged for 15m) | 2.6 (charged for 15m) |
| Ref. oil | Model | | Refer to the name plate of compressor. | Refer to the name plate of compressor. | Refer to the name plate of compressor. |
| | Charge | L | 1.4 | 1.4 | 1.4 |
| Drawing No. | | | C : 4D052470D | C : 4D052470D | C : 4D052470D |

**Note:** *1. The above data are based on the following conditions.

| | Cooling | Equivalent piping length | Hz, volts |
|---|---|---|---|
| (1) | Indoor: 27°CDB, 19.5°CWB<br>Outdoor: 35°CDB, 24°CWB | 7.5m (Horizontal) | 50Hz, 220V (380V) |
| (2) | Indoor: 27°CDB, 19.0°CWB<br>Outdoor: 35°CDB, 24°CWB | 7.5m (Horizontal) | 50Hz, 220V (380V) |

*2. Capacities are net, including a deduction for cooling for indoor fan motor heat.
*3. AFR (Air flow rate) is shown at 220V(380V)-240V(415V).

| Conversion formulae |
|---|
| kcal/h=kW×860<br>Btu/h=kW×3412<br>cfm=m³/min×35.3 |

# 4.3 FDBG-NU

## Duct connection low static pressure type

| Model | Indoor unit | | FDBG18NUV1 | FDBG21NUV1 | FDBG26NUV1 |
|---|---|---|---|---|---|
| | Outdoor unit | V1 | R18NUV1 | R21NUV1 | R26NUV1 |
| | | Y1 | — | — | R26NUY1 |
| Power supply | | | V1: 1 phase 50Hz 220-240V | V1: 1 phase 50Hz 220-240V | V1: 1 phase 50Hz 220-240V<br>Y1: 3 phase 50Hz 380-415V |
| *1 *2 Cooling capacity (1) / (2) | | Btu/h | 18,100/18,000 | 21,200/21,000 | 26,300/26,000 |
| | | kW | 5.3/5.3 | 6.2/6.2 | 7.7/7.6 |
| | | kcal/h | 4,580/4,560 | 5,340/5,290 | 6,630/6,550 |
| **Indoor unit** | | | **FDBG18NUV1** | **FDBG21NUV1** | **FDBG26NUV1** |
| Dimensions | H×W×D | mm | 260×900×580 | 260×1,300×580 | 260×1,300×580 |
| Coil | Type | | Cross fin coil<br>(Multi louver fins and Hi-XSL tubes) | Cross fin coil<br>(Multi louver fins and Hi-XSL tubes) | Cross fin coil<br>(Multi louver fins and Hi-XSL tubes) |
| | Row×Stages×Fin pitch | | 3×10×1.75 | 3×10×1.75 | 3×10×1.75 |
| | Face area | m² | 0.189 | 0.231 | 0.231 |
| Fan | Type | | Sirocco fan | Sirocco fan | Sirocco fan |
| | Motor output | W | 45 | 65 | 65 |
| | Air flow rate *3 | m³/min | (H) 13 (L) 11 | (H) 18 (L) 15 | (H) 18 (L) 15 |
| Mass (Weight) | | kg | 23 | 31 | 31 |
| Piping connections | Liquid | mm | ϕ6.4 (Flare) | ϕ6.4 (Flare) | ϕ9.5 (Flare) |
| | Gas | mm | ϕ15.9 (Flare) | ϕ15.9 (Flare) | ϕ15.9 (Flare) |
| | Drain | mm | 3/4 B (I.D.ϕ21.6 O.D.ϕ27.2) | 3/4 B (I.D.ϕ21.6 O.D.ϕ27.2) | 3/4 B (I.D.ϕ21.6 O.D.ϕ27.2) |
| Remote controller (option) | Wired | | KRC47-1A / KRC47-2A / KRC47-4A | KRC47-1A / KRC47-2A / KRC47-4A | KRC47-1A / KRC47-2A / KRC47-4A |
| | Wireless | | — | — | — |
| **Outdoor unit** | | V1 | **R18NUV1** | **R21NUV1** | **R26NUV1** |
| | | Y1 | — | — | **R26NUY1** |
| Colour | | | Ivory white | Ivory white | Ivory |
| Dimensions | H×W×D | mm | 540×750×270 | 685×800×300 | 770×900×320 |
| Coil | Type | | Cross fin coil (HL fins and Hi-XA tubes) | Cross fin coil (HL fins and Hi-XA tubes) | Cross fin coil (FL fins and Hi-XA tubes) |
| | Row×Stages×Fin pitch | | 2×22×2.0 | 2×28×2.0 | 2×34×2.0 |
| | Face area | m² | 0.372 | 0.465 | 0.634 |
| Comp. | Model | V1 | RC70AV1TRT | NH41VMDT | NH52VNHT |
| | | Y1 | — | — | NH52YDTT |
| | Type | | Hermetically sealed rotary type | Hermetically sealed rotary type | Hermetically sealed rotary type |
| | Motor output | kW | 1.7 | 2.2 | 2.5 |
| Fan | Model | | PZ380 | PZ430 | P47L11S |
| | Type | | Propeller | Propeller | Propeller |
| | Motor output | W | 45 | 53 | 90 |
| | Air flow rate | m³/min | 27 | 40 | 59 |
| Mass (Weight) | kg | V1 | 42 | 61 | 70 |
| | | Y1 | — | — | 69 |
| Piping connections | Liquid | mm | ϕ6.4 (Flare) | ϕ6.4 (Flare) | ϕ9.5 (Flare) |
| | Gas | mm | ϕ15.9 (Flare) | ϕ15.9 (Flare) | ϕ15.9 (Flare) |
| | Drain | mm | ϕ18.0 (Hole) | ϕ18.0 (Hole) | ϕ26.0 (Hole) |
| Safety devices | | | Thermal protector for compressor, outdoor fan motor and indoor fan motor.<br>Fuse. | Thermal protector for outdoor fan motor and indoor fan motor.<br>Internal protector of compressor.<br>Fuse. | Thermal protector for outdoor fan motor and indoor fan motor.<br>Internal protector of compressor.<br>Reverse phase protector (Y1).<br>Fuse. |
| Capacity step | | % | 100-0 | 100-0 | 100-0 |
| Refrigerant control | | | Capillary tube | Capillary tube | Capillary tube |
| Ref. piping | Max. length | m | 30 (Equivalent length 50m) | 30 (Equivalent length 50m) | 30 (Equivalent length 50m) |
| | Max. height difference | m | 15 | 15 | 20 |
| Refrigerant | Model | | R-22 | R-22 | R-22 |
| | Charge (factory charge) | kg | 1.20 (charged for 10m) | 1.50 (charged for 10m) | 2.3 (charged for 10m) |
| Ref. oil | Model | | Refer to the name plate of compressor. | Refer to the name plate of compressor. | Refer to the name plate of compressor. |
| | Charge | L | 0.85 | 1.20 | 1.3 |
| Drawing No. | | | C : 4D054295D | C : 4D054295D | C : 4D054288C |

**Note:** *1. The above data are based on the following conditions.

| | Cooling | Equivalent piping length | Hz, volts |
|---|---|---|---|
| (1) | Indoor: 27°CDB, 19.5°CWB<br>Outdoor: 35°CDB, 24°CWB | 7.5m (Horizontal) | 50Hz, 220V (380V) |
| (2) | Indoor: 27°CDB, 19.0°CWB<br>Outdoor: 35°CDB, 24°CWB | 7.5m (Horizontal) | 50Hz, 220V (380V) |

*2. Capacities are net, including a deduction for cooling for indoor fan motor heat.
*3. Refer to "11. Fan performance" in detail.

| Conversion formulae |
|---|
| kcal/h=kW×860<br>Btu/h=kW×3412<br>cfm=m³/min×35.3 |

1

## 4.4 FDMG-NU

### Duct connection middle static pressure type

| Model | Indoor unit | | FDMG26NUV1 | FDMG30NUV1 |
|---|---|---|---|---|
| | Outdoor unit | V1 | R26NUV1 | R30NUV1 |
| | | Y1 | R26NUY1 | R30NUY1 |
| Power supply | | | V1: 1 phase 50Hz 220-240V<br>Y1: 3 phase 50Hz 380-415V | V1: 1 phase 50Hz 220-240V<br>Y1: 3 phase 50Hz 380-415V |
| *1 *2 Cooling capacity (1) / (2) | | Btu/h | 26,300/26,000 | 30,400/30,000 |
| | | kW | 7.7/7.6 | 8.9/8.8 |
| | | kcal/h | 6,630/6,550 | 7,670/7,570 |
| **Indoor unit** | | | **FDMG26NUV1** | **FDMG30NUV1** |
| Dimensions | H×W×D | mm | 305×1,350×680 | 305×1,550×680 |
| Coil | Type | | Cross fin coil (Multi louver fins and Hi-XSS tubes) | Cross fin coil (Multi louver fins and Hi-XSS tubes) |
| | Row×Stages×Fin pitch | | 3×12×1.75 | 2×12×1.75 |
| | Face area | m² | 0.290 | 0.340 |
| Fan | Type | | Sirocco fan | Sirocco fan |
| | Motor output | W | 125 | 225 |
| | Air flow rate *3 | m³/min | 23 | 34 |
| | Rated ext. static pressure *3 | $mmH_2O$ | 8.5 | 10.1 |
| Mass (Weight) | | kg | 43 | 51 |
| Piping connections | Liquid | mm | ϕ9.5 (Flare) | ϕ9.5 (Flare) |
| | Gas | mm | ϕ15.9 (Flare) | ϕ15.9 (Flare) |
| | Drain | mm | 3/4 B (I.D.ϕ21.6 O.D.ϕ27.2) | 3/4 B (I.D.ϕ21.6 O.D.ϕ27.2) |
| Remote controller (option) | Wired | | KRC47-1A / KRC47-2A / KRC47-4A | KRC47-1A / KRC47-2A / KRC47-4A |
| | Wireless | | – | – |
| **Outdoor unit** | | V1 | **R26NUV1** | **R30NUV1** |
| | | Y1 | **R26NUY1** | **R30NUY1** |
| Colour | | | Ivory | Ivory |
| Dimensions | H×W×D | mm | 770×900×320 | 770×900×320 |
| Coil | Type | | Cross fin coil (FL fins and Hi-XA tubes) | Cross fin coil (FL fins and Hi-XA tubes) |
| | Row×Stages×Fin pitch | | 2×34×2.0 | 2×34×2.0 |
| | Face area | m² | 0.634 | 0.634 |
| Comp. | Model | V1 | NH52VNHT | NH52VNHT |
| | | Y1 | NH52YDTT | NH52YDTT |
| | Type | | Hermetically sealed rotary type | Hermetically sealed rotary type |
| | Motor output | kW | 2.5 | 2.5 |
| Fan | Model | | P47L11S | P47L11S |
| | Type | | Propeller | Propeller |
| | Motor output | W | 90 | 90 |
| | Air flow rate | m³/min | 59 | 59 |
| Mass (Weight) | | kg V1 | 70 | 70 |
| | | kg Y1 | 69 | 69 |
| Piping connections | Liquid | mm | ϕ9.5 (Flare) | ϕ9.5 (Flare) |
| | Gas | mm | ϕ15.9 (Flare) | ϕ15.9 (Flare) |
| | Drain | mm | ϕ26.0 (Hole) | ϕ26.0 (Hole) |
| Safety devices | | | Thermal protector for outdoor fan motor and indoor fan motor.<br>Internal protector of compressor.<br>Reverse phase protector (Y1).<br>Fuse. | Thermal protector for outdoor fan motor and indoor fan motor.<br>Internal protector of compressor.<br>Reverse phase protector (Y1).<br>Fuse. |
| Capacity step | | % | 100-0 | 100-0 |
| Refrigerant control | | | Capillary tube | Capillary tube |
| Ref. piping | Max. length | m | 30 (Equivalent length 50m) | 30 (Equivalent length 50m) |
| | Max. height difference | m | 20 | 20 |
| Refrigerant | Model | | R-22 | R-22 |
| | Charge (factory charge) | kg | 2.3 (charged for 10m) | 2.3 (charged for 10m) |
| Ref. oil | Model | | Refer to the name plate of compressor. | Refer to the name plate of compressor. |
| | Charge | L | 1.3 | 1.3 |
| Drawing No. | | | C : 4D054287C | C : 4D064686B |

**Note:** *1. The above data are based on the following conditions.

| | Cooling | Equivalent piping length | Hz, volts |
|---|---|---|---|
| (1) | Indoor: 27°CDB, 19.5°CWB<br>Outdoor: 35°CDB, 24°CWB | 7.5m (Horizontal) | 50Hz, 220V (380V) |
| (2) | Indoor: 27°CDB, 19.0°CWB<br>Outdoor: 35°CDB, 24°CWB | 7.5m (Horizontal) | 50Hz, 220V (380V) |

*2. Capacities are net, including a deduction for cooling for indoor fan motor heat.
*3. Refer to "11. Fan performance" in detail.

| Conversion formulae |
|---|
| kcal/h=kW×860<br>Btu/h=kW×3412<br>cfm=m³/min×35.3 |

## Duct connection middle static pressure type

| | | | | | |
|---|---|---|---|---|---|
| **Model** | **Indoor unit** | | **FDMG36NUV1** | | **FDMG42NUV1** |
| | **Outdoor unit** | **V1** | **R36NUV1** | | **—** |
| | | **Y1** | **R36NUY1** | | **R42NUY1** |
| Power supply | | | V1: 1 phase 50Hz 220-240V<br>Y1: 3 phase 50Hz 380-415V | | Y1: 3 phase 50Hz 380-415V |
| *1 *2 Cooling capacity (1) / (2) | | Btu/h | 36,500/36,000 | | 42,700/42,000 |
| | | kW | 10.7/10.6 | | 12.5/12.3 |
| | | kcal/h | 9,200/9,100 | | 10,800/10,600 |
| **Indoor unit** | | | **FDMG36NUV1** | | **FDMG42NUV1** |
| Dimensions | H×W×D | mm | 305×1,550×680 | | 305×1,550×680 |
| Coil | Type | | Cross fin coil (Multi louver fins and Hi-XSS tubes) | | Cross fin coil (Multi louver fins and Hi-XSS tubes) |
| | Row×Stages×Fin pitch | | 3×12×1.75 | | 3×12×1.75 |
| | Face area | m² | 0.340 | | 0.340 |
| Fan | Type | | Sirocco fan | | Sirocco fan |
| | Motor output | W | 225 | | 225 |
| | Air flow rate *3 | m³/min | 37 | | 42 |
| | Rated ext. static pressure *3 | $mmH_2O$ | 9.8 | | 8.0 |
| Mass (Weight) | | kg | 52 | | 52 |
| Piping connections | Liquid | mm | ϕ9.5 (Flare) | | ϕ9.5 (Flare) |
| | Gas | mm | ϕ19.1 (Flare) | | ϕ19.1 (Flare) |
| | Drain | mm | 3/4 B (I.D.ϕ21.6 O.D.ϕ27.2) | | 3/4 B (I.D.ϕ21.6 O.D.ϕ27.2) |
| Remote controller (option) | Wired | | KRC47-1A | KRC47-2A | KRC47-4A | KRC47-1A | KRC47-2A | KRC47-4A |
| | Wireless | | — | | — |
| **Outdoor unit** | | **V1** | **R36NUV1** | | **—** |
| | | **Y1** | **R36NUY1** | | **R42NUY1** |
| Colour | | | Ivory | | Ivory |
| Dimensions | H×W×D | mm | 1,170×900×320 | | 1,170×900×320 |
| Coil | Type | | Cross fin coil (HL fins and Hi-XA tubes) | | Cross fin coil (HL fins and Hi-XA tubes) |
| | Row×Stages×Fin pitch | | 1×52×1.4 | | 1×52×1.4 |
| | Face area | m² | 1.015 | | 1.015 |
| Comp. | Model | V1 | JT125GA-V1@K | | — |
| | | Y1 | JT125GA-Y1@K | | JT160GA-Y1@K |
| | Type | | Hermetically sealed scroll type | | Hermetically sealed scroll type |
| | Motor output | kW | 3.00 | | 3.75 |
| Fan | Model | | P47L11S | | P47L11S×2 |
| | Type | | Propeller | | Propeller |
| | Motor output | W | 90 | | 65+90 |
| | Air flow rate | m³/min | 59 | | 92 |
| Mass (Weight) | kg | V1 | 81 | | — |
| | | Y1 | 79 | | 87 |
| Piping connections | Liquid | mm | ϕ9.5 (Flare) | | ϕ9.5 (Flare) |
| | Gas | mm | ϕ19.1 (Flare) | | ϕ19.1 (Flare) |
| | Drain | mm | ϕ26.0 (Hole) | | ϕ26.0 (Hole) |
| Safety devices | | | Thermal protector for outdoor fan motor and indoor fan motor.<br>High pressure switch.<br>Low pressure switch.<br>Internal protector of compressor.<br>Reverse phase protector (Y1).<br>Fuse.<br>Thermo switch (Discharge pipe). | | Thermal protector for outdoor fan motor and indoor fan motor.<br>High pressure switch.<br>Low pressure switch.<br>Internal protector of compressor.<br>Reverse phase protector.<br>Fuse.<br>Thermo switch (Discharge pipe). |
| Capacity step | | % | 100-0 | | 100-0 |
| Refrigerant control | | | Capillary tube | | Capillary tube |
| Ref. piping | Max. length | m | 30 (Equivalent length 50m) | | 30 (Equivalent length 50m) |
| | Max. height difference | m | 20 | | 20 |
| Refrigerant | Model | | R-22 | | R-22 |
| | Charge (factory charge) | kg | 2.0 (charged for 15m) | | 2.4 (charged for 15m) |
| Ref. oil | Model | | Refer to the name plate of compressor. | | Refer to the name plate of compressor. |
| | Charge | L | 1.4 | | 1.4 |
| Drawing No. | | | C : 3D052567D | | C : 3D052567D |

**Note:** *1. The above data are based on the following conditions.

| | Cooling | Equivalent piping length | Hz, volts |
|---|---|---|---|
| (1) | Indoor: 27°CDB, 19.5°CWB<br>Outdoor: 35°CDB, 24°CWB | 7.5m (Horizontal) | 50Hz, 220V (380V) |
| (2) | Indoor: 27°CDB, 19.0°CWB<br>Outdoor: 35°CDB, 24°CWB | 7.5m (Horizontal) | 50Hz, 220V (380V) |

*2. Capacities are net, including a deduction for cooling for indoor fan motor heat.

*3. Refer to "11. Fan performance" in detail.

| Conversion formulae |
|---|
| kcal/h=kW×860<br>Btu/h=kW×3412<br>cfm=m³/min×35.3 |

1

## Duct connection middle static pressure type

| Model | Indoor unit | | FDMG48NUV1 | FDMG51NUV1 | FDMG56NUV1 |
|---|---|---|---|---|---|
| | Outdoor unit | Y1 | R48NUY1 | R51NUY1 | R56NUY1 |
| Power supply | | | Y1: 3 phase 50Hz 380-415V | Y1: 3 phase 50Hz 380-415V | Y1: 3 phase 50Hz 380-415V |
| *1 *2 Cooling capacity (1) / (2) | | Btu/h | 49,100/48,000 | 52,200/51,000 | 57,000/56,000 |
| | | kW | 14.4/14.1 | 15.3/15.0 | 16.7/16.4 |
| | | kcal/h | 12,400/12,100 | 13,200/12,900 | 14,400/14,100 |
| **Indoor unit** | | | **FDMG48NUV1** | **FDMG51NUV1** | **FDMG56NUV1** |
| Dimensions | H×W×D | mm | 305×1,550×680 | 305×1,900×680 | 305×1,900×680 |
| Coil | Type | | Cross fin coil (Multi louver fins and Hi-XSS tubes) | Cross fin coil (Multi louver fins and Hi-XSS tubes) | Cross fin coil (Multi louver fins and Hi-XSS tubes) |
| | Row×Stages×Fin pitch | | 3×12×1.75 | 3×12×1.75 | 3×12×1.75 |
| | Face area | m² | 0.340 | 0.428 | 0.428 |
| Fan | Type | | Sirocco fan | Sirocco fan | Sirocco fan |
| | Motor output | W | 225 | 225 | 225 |
| | Air flow rate *3 | m³/min | 42 | 42 | 42 |
| | Rated ext. static pressure *3 | $mmH_2O$ | 8.0 | 9.8 | 9.8 |
| Mass (Weight) | | kg | 52 | 58 | 58 |
| Piping connections | Liquid | mm | ϕ9.5 (Flare) | ϕ9.5 (Flare) | ϕ9.5 (Flare) |
| | Gas | mm | ϕ19.1 (Flare) | ϕ19.1 (Flare) | ϕ19.1 (Flare) |
| | Drain | mm | 3/4 B (I.D.ϕ21.6 O.D.ϕ27.2) | 3/4 B (I.D.ϕ21.6 O.D.ϕ27.2) | 3/4 B (I.D.ϕ21.6 O.D.ϕ27.2) |
| Remote controller (option) | Wired | | KRC47-1A / KRC47-2A / KRC47-4A | KRC47-1A / KRC47-2A / KRC47-4A | KRC47-1A / KRC47-2A / KRC47-4A |
| | Wireless | | – | – | – |
| **Outdoor unit** | | **Y1** | **R48NUY1** | **R51NUY1** | **R56NUY1** |
| Colour | | | Ivory | Ivory | Ivory |
| Dimensions | H×W×D | mm | 1,345×900×320 | 1,345×900×320 | 1,345×880×370 |
| Coil | Type | | Cross fin coil (HL fins and Hi-XA tubes) | Cross fin coil (HL fins and Hi-XA tubes) | Cross fin coil (FL fins and Hi-XA tubes) |
| | Row×Stages×Fin pitch | | 1×60×1.4 | 1×60×1.4 | 2×60×2.0 |
| | Face area | m² | 1.172 | 1.172 | 1.088 |
| Comp. | Model | Y1 | JT170GA-Y1@K | JT170GA-Y1@K | JT200B-YE |
| | Type | | Hermetically sealed scroll type | Hermetically sealed scroll type | Hermetically sealed scroll type |
| | Motor output | kW | 4.50 | 4.50 | 4.50 |
| Fan | Model | | P47L11S×2 | P47L11S×2 | P45J11S×2 |
| | Type | | Propeller | Propeller | Propeller |
| | Motor output | W | 65+90 | 65+90 | 64+56 |
| | Air flow rate | m³/min | 97 | 97 | 101 |
| Mass (Weight) | kg | Y1 | 92 | 93 | 114 |
| Piping connections | Liquid | mm | ϕ9.5 (Flare) | ϕ9.5 (Flare) | ϕ9.5 (Flare) |
| | Gas | mm | ϕ19.1 (Flare) | ϕ19.1 (Flare) | ϕ19.1 (Flare) |
| | Drain | mm | ϕ26.0 (Hole) | ϕ26.0 (Hole) | ϕ26.0 (Hole) |
| Safety devices | | | Thermal protector for outdoor fan motor and indoor fan motor.<br>High pressure switch.<br>Low pressure switch.<br>Internal protector of compressor.<br>Reverse phase protector.<br>Fuse.<br>Thermo switch (Discharge pipe). | Thermal protector for outdoor fan motor and indoor fan motor.<br>High pressure switch.<br>Low pressure switch.<br>Internal protector of compressor.<br>Reverse phase protector.<br>Fuse.<br>Thermo switch (Discharge pipe). | Thermal protector for outdoor fan motor and indoor fan motor.<br>High pressure switch.<br>Low pressure switch.<br>Internal protector of compressor.<br>Reverse phase protector.<br>Fuse.<br>Thermo switch (Discharge pipe). |
| Capacity step | | % | 100-0 | 100-0 | 100-0 |
| Refrigerant control | | | Capillary tube | Capillary tube | Capillary tube |
| Ref. piping | Max. length | m | 30 (Equivalent length 50m) | 30 (Equivalent length 50m) | 50 (Equivalent length 70m) |
| | Max. height difference | m | 20 | 20 | 30 |
| Refrigerant | Model | | R-22 | R-22 | R-22 |
| | Charge (factory charge) | kg | 2.6 (charged for 15m) | 2.7 (charged for 15m) | 2.8 (charged for 5m) |
| Ref. oil | Model | | Refer to the name plate of compressor. | Refer to the name plate of compressor. | Refer to the name plate of compressor. |
| | Charge | L | 1.4 | 1.4 | 1.6 |
| Drawing No. | | | C : 3D052567D | C : 3D052567D | C : 3D052567D |

**Note:** *1. The above data are based on the following conditions.

| | Cooling | Equivalent piping length | Hz, volts |
|---|---|---|---|
| (1) | Indoor: 27°CDB, 19.5°CWB<br>Outdoor: 35°CDB, 24°CWB | 7.5m (Horizontal) | 50Hz, 380V |
| (2) | Indoor: 27°CDB, 19.0°CWB<br>Outdoor: 35°CDB, 24°CWB | 7.5m (Horizontal) | 50Hz, 380V |

| Conversion formulae |
|---|
| kcal/h=kW×860<br>Btu/h=kW×3412<br>cfm=m³/min×35.3 |

*2. Capacities are net, including a deduction for cooling for indoor fan motor heat.
*3. Refer to "11. Fan performance" in detail.

# 5. Dimensions and service space

## 5.1 Indoor unit

### 5.1.1 FHC-NU (Ceiling mounted cassette type)

**FHC18NUV1 + BYC125K-W1**
**FHC21NUV1 + BYC125K-W1**

Unit (mm)

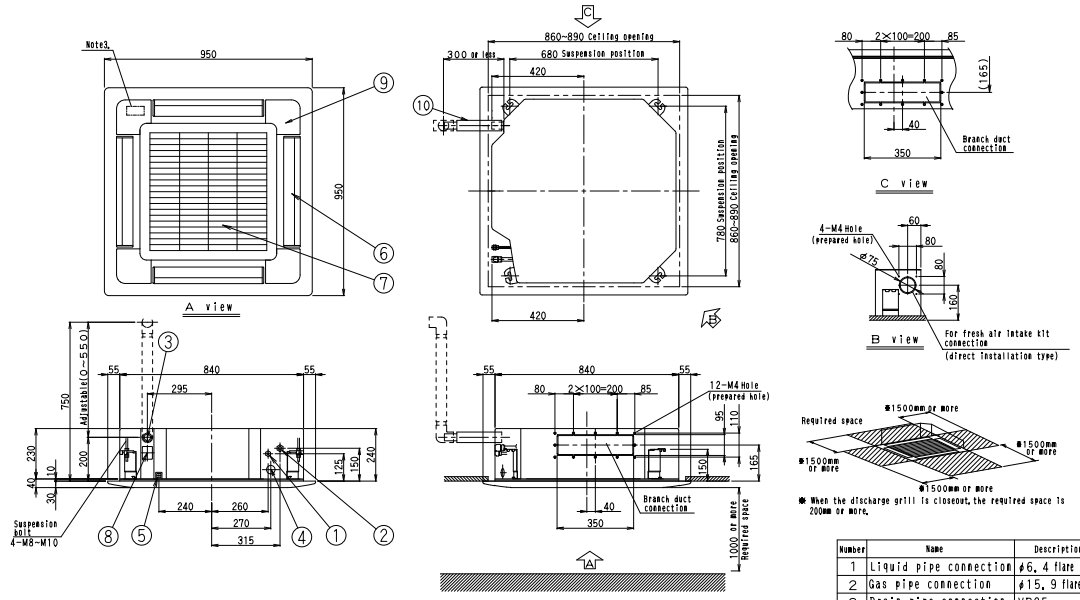


| Number | Name | Description |
|---|---|---|
| 1 | Liquid pipe connection | ϕ6.4 flare |
| 2 | Gas pipe connection | ϕ15.9 flare |
| 3 | Drain pipe connection | VP25 |
| 4 | Power supply connection | |
| 5 | Remote control code and control wiring connection | |
| 6 | Air discharge grille | |
| 7 | Air suction grille | |
| 8 | Port for water supply | |
| 9 | Corner decoration cover | |
| 10 | Drain hose | O.D.32 |

Notes:
1. Location of unit's Name Plate
   For Main body:Switch Box cover inside surface of suction grille.
   For decoration panel:Panel frame inside surface of suction grille.
2. When installing an optional accessory, refer to the Installation drawings.
   - For fresh air intake kit……Inspection port is necessary.
   - For high efficiency filter unit……Inspection port is not necessary.
3. In case of using wireless remote controller, this position will be a signal receiver. Refer to the drawing of wireless remote controller in detail.
4. When the temperature and humidity in the ceiling exceed 30°C and RH 80% or the fresh air is inducted into the ceiling or the unit continues 24 hour operation, an additional insulation (thickness 10mm or more of glasswool or polyethylene form) is required.

C : 3D054367

**FHC26NUV1 + BYC125K-W1**

Unit (mm)

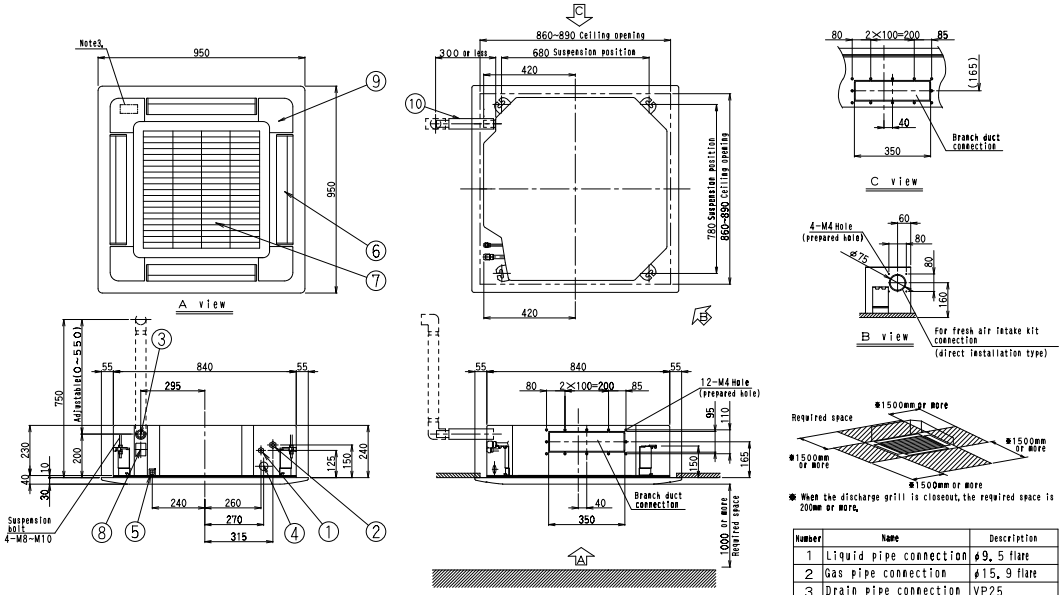


| Number | Name | Description |
|---|---|---|
| 1 | Liquid pipe connection | ϕ9.5 flare |
| 2 | Gas pipe connection | ϕ15.9 flare |
| 3 | Drain pipe connection | VP25 |
| 4 | Power supply connection | |
| 5 | Remote control code and control wiring connection | |
| 6 | Air discharge grille | |
| 7 | Air suction grille | |
| 8 | Port for water supply | |
| 9 | Corner decoration cover | |
| 10 | Drain hose | O.D.32 |

Notes:
1. Location of unit's Name Plate
   For Main body:Switch Box cover inside surface of suction grille.
   For decoration panel:Panel frame inside surface of suction grille.
2. When installing an optional accessory, refer to the Installation drawings.
   - For fresh air intake kit……Inspection port is necessary.
   - For high efficiency filter unit……Inspection port is not necessary.
3. In case of using wireless remote controller, this position will be a signal receiver. Refer to the drawing of wireless remote controller in detail.
4. When the temperature and humidity in the ceiling exceed 30°C and RH 80% or the fresh air is inducted into the ceiling or the unit continues 24 hour operation, an additional insulation (thickness 10mm or more of glasswool or polyethylene form) is required.

C : 3D054368

## FHC30NUV1 + BYC125K-W1

Unit (mm)

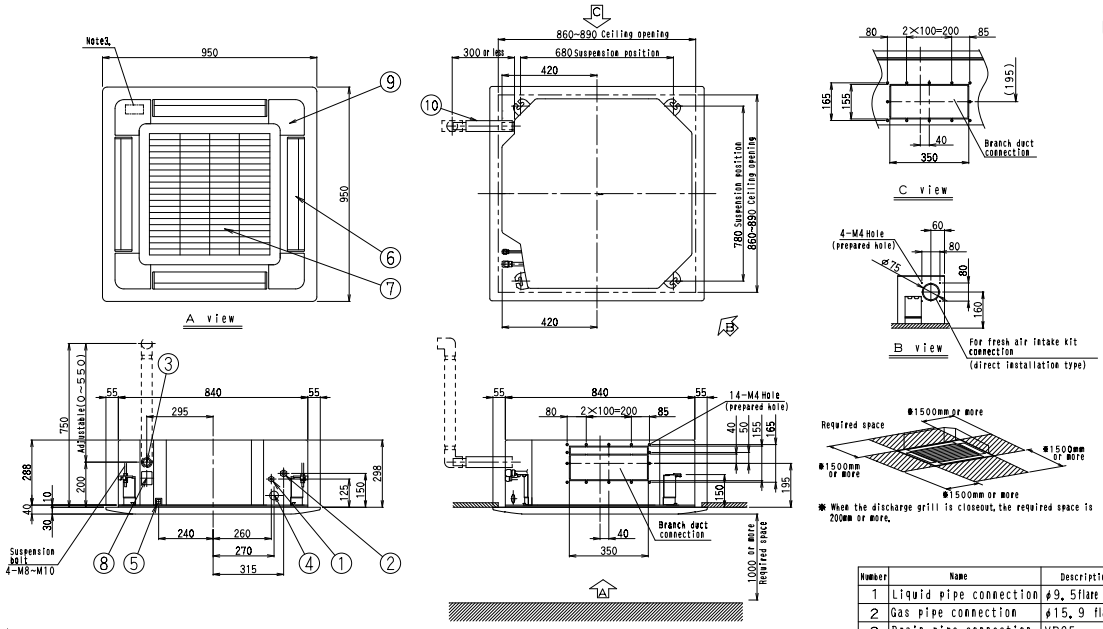


Notes:

1. Location of unit's Name Plate
   For Main body:Switch Box Cover inside surface of suction grille.
   For decoration panel:Panel frame inside surface of suction grille.
2. When installing an optional accessory, refer to the installation drawings.
   - For fresh air intake kit……Inspection port is necessary.
   - For high efficiency filter unit……Inspection port is not necessary.
3. In case of using wireless remote controller, this position will be a signal receiver. Refer to the drawing of wireless remote controller in detail.
4. When the temperature and humidity in the ceiling exceed 30°C and RH 80% or the fresh air is inducted into the ceiling or the unit continues 24 hour operation, an additional insulation (thickness 10mm or more of glasswool or polyethylene form) is required.

| Number | Name | Description |
|---|---|---|
| 1 | Liquid pipe connection | ϕ9.5flare |
| 2 | Gas pipe connection | ϕ15.9 flare |
| 3 | Drain pipe connection | VP25 |
| 4 | Power supply connection | |
| 5 | Remote control code and control wiring connection | |
| 6 | Air discharge grille | |
| 7 | Air suction grille | |
| 8 | Port for water supply | |
| 9 | Corner decoration cover | |
| 10 | Drain hose | O.D.32 |

C : 3D054370A

## FHC36NUV1 + BYC125K-W1
## FHC42NUV1 + BYC125K-W1
## FHC48NUV1 + BYC125K-W1

Unit (mm)

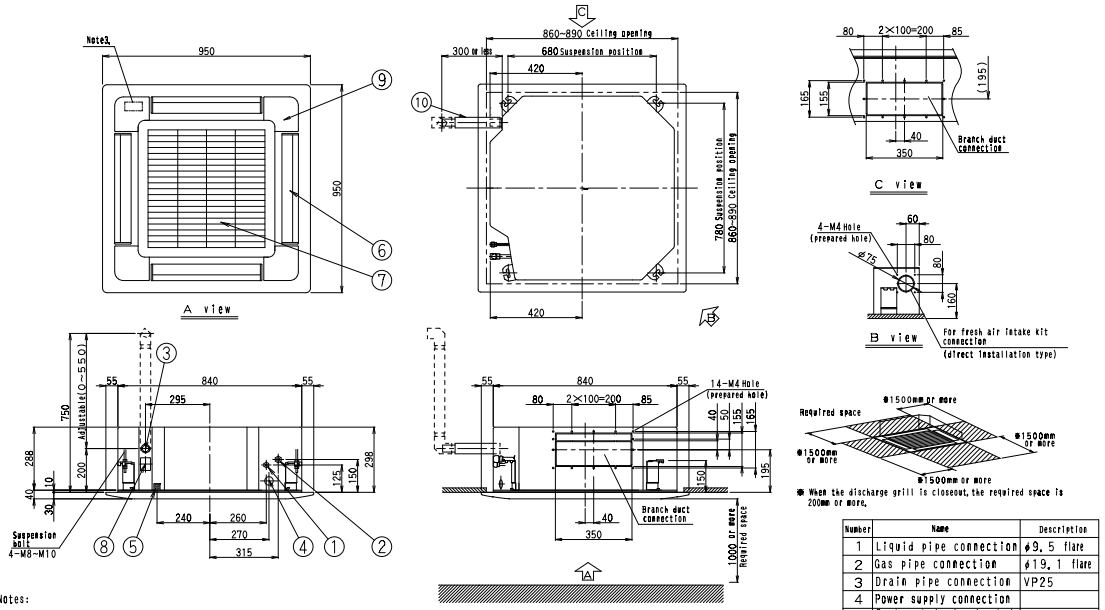


Notes:

1. Location of unit's Name Plate
   For Main body:Switch Box Cover inside surface of suction grille.
   For decoration panel:Panel frame inside surface of suction grille.
2. When installing an optional accessory, refer to the installation drawings.
   - For fresh air intake kit……Inspection port is necessary.
   - For high efficiency filter unit……Inspection port is not necessary.
3. In case of using wireless remote controller, this position will be a signal receiver. Refer to the drawing of wireless remote controller in detail.
4. When the temperature and humidity in the ceiling exceed 30°C and RH 80% or the fresh air is inducted into the ceiling or the unit continues 24 hour operation, an additional insulation (thickness 10mm or more of glasswool or polyethylene form) is required.

| Number | Name | Description |
|---|---|---|
| 1 | Liquid pipe connection | ϕ9.5 flare |
| 2 | Gas pipe connection | ϕ19.1 flare |
| 3 | Drain pipe connection | VP25 |
| 4 | Power supply connection | |
| 5 | Remote control code and control wiring connection | |
| 6 | Air discharge grille | |
| 7 | Air suction grille | |
| 8 | Port for water supply | |
| 9 | Corner decoration cover | |
| 10 | Drain hose | O.D.32 |

C : 3D052528

## 5.1.2 FHC-NU with High-efficiency filter

### KAFP556D80 · 557D80 for FHC18~26NUV1

Note:When other optional kit is installed, refer to the installation drawing of its optional kit.

Unit (mm)

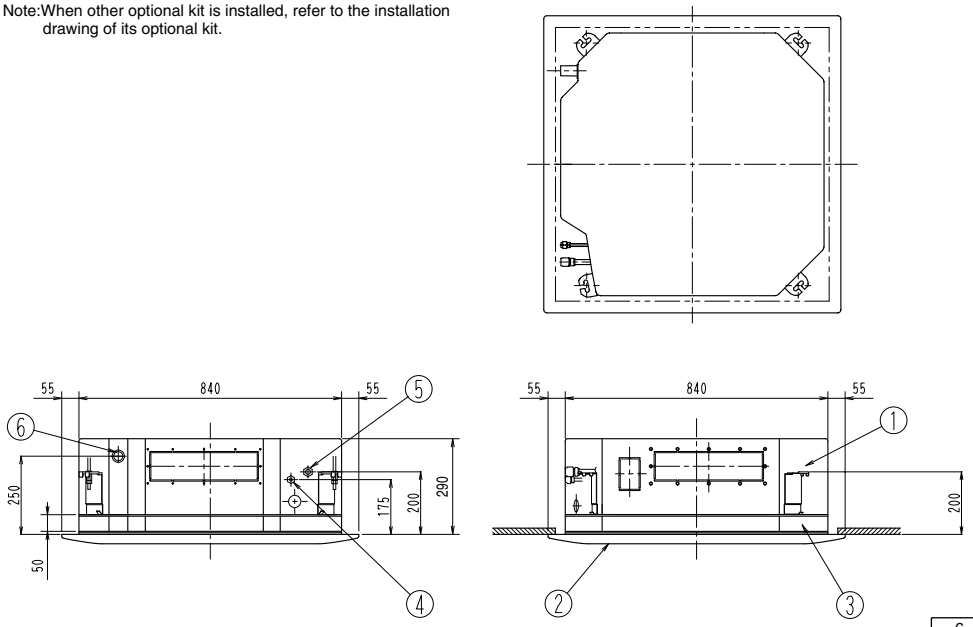


| Number | Name | Description |
|---|---|---|
| 6 | Drain pipe connection | |
| 5 | Gas pipe connection | |
| 4 | Liquid pipe connection | |
| 3 | High efficiency filter | |
| 2 | Decoration panel | |
| 1 | Indoor unit | |

JC : 3D032975C

### KAFP556D160 · 557D160 for FHC30~48NUV1

Note:When other optional kit is installed, refer to the installation drawing of its optional kit.

Unit (mm)

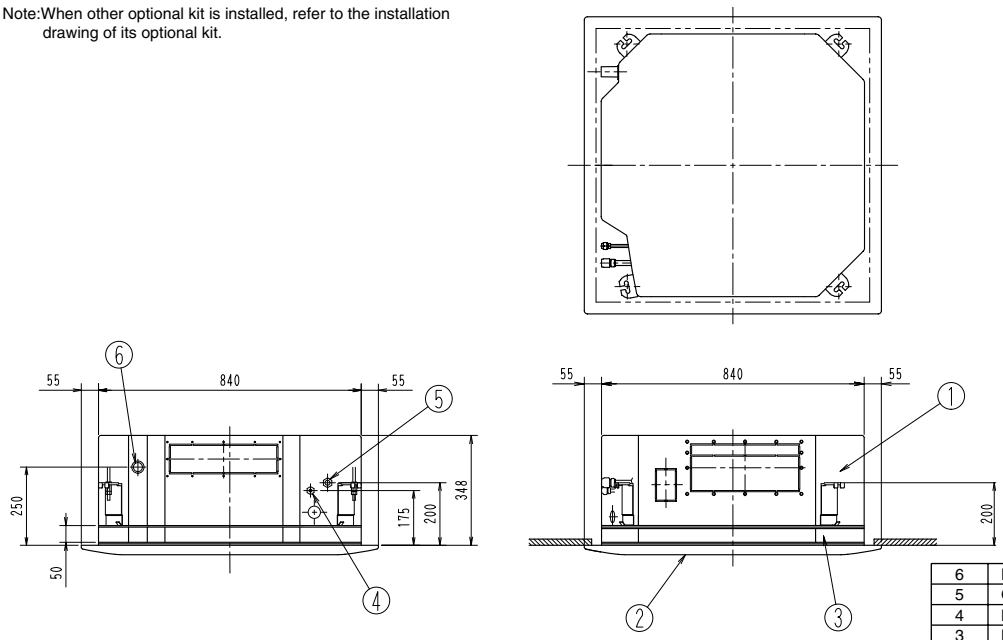


| Number | Name | Description |
|---|---|---|
| 6 | Drain pipe connection | |
| 5 | Gas pipe connection | |
| 4 | Liquid pipe connection | |
| 3 | High efficiency filter | |
| 2 | Decoration panel | |
| 1 | Indoor unit | |

J : 3D032976C

## 5.1.3 FHC-NU with Fresh air intake kit (Without T-joint, Duct fan)

### KDDP55D160 for FHC18~26NUV1

Unit (mm)

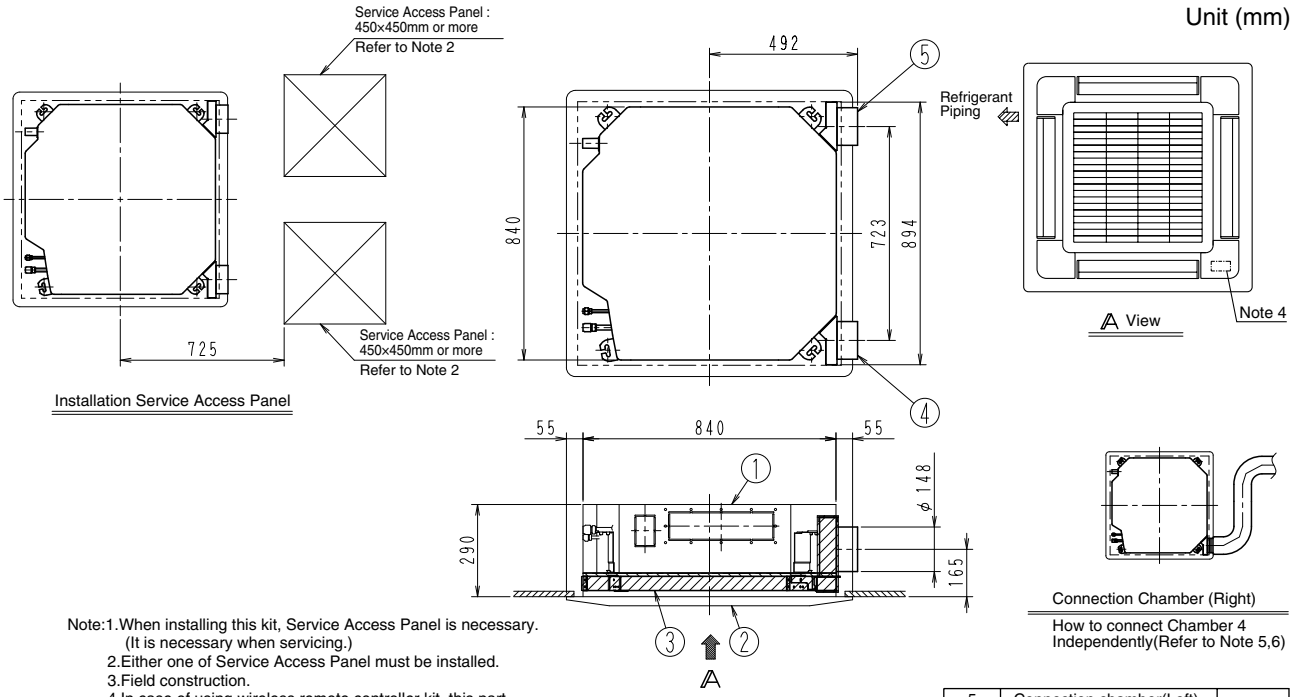


Note:1.When installing this kit, Service Access Panel is necessary. (It is necessary when servicing.)
2.Either one of Service Access Panel must be installed.
3.Field construction.
4.In case of using wireless remote controller kit, this part will be the infrared receiver.
5.When both side intakes can not be ensured due to the obstacles, one side intake is acceptable.
6.When installing the wireless infrared receiver to the unit, air inlet must be on the right side as shown.

| Number | Name | Description |
|---|---|---|
| 5 | Connection chamber(Left) | |
| 4 | Connection chamber(Right) | |
| 3 | Suction chamber | |
| 2 | Decoration panel | |
| 1 | Indoor unit | |

JC : 3D032981D

### KDDP55D160 for FHC30~48NUV1

Unit (mm)

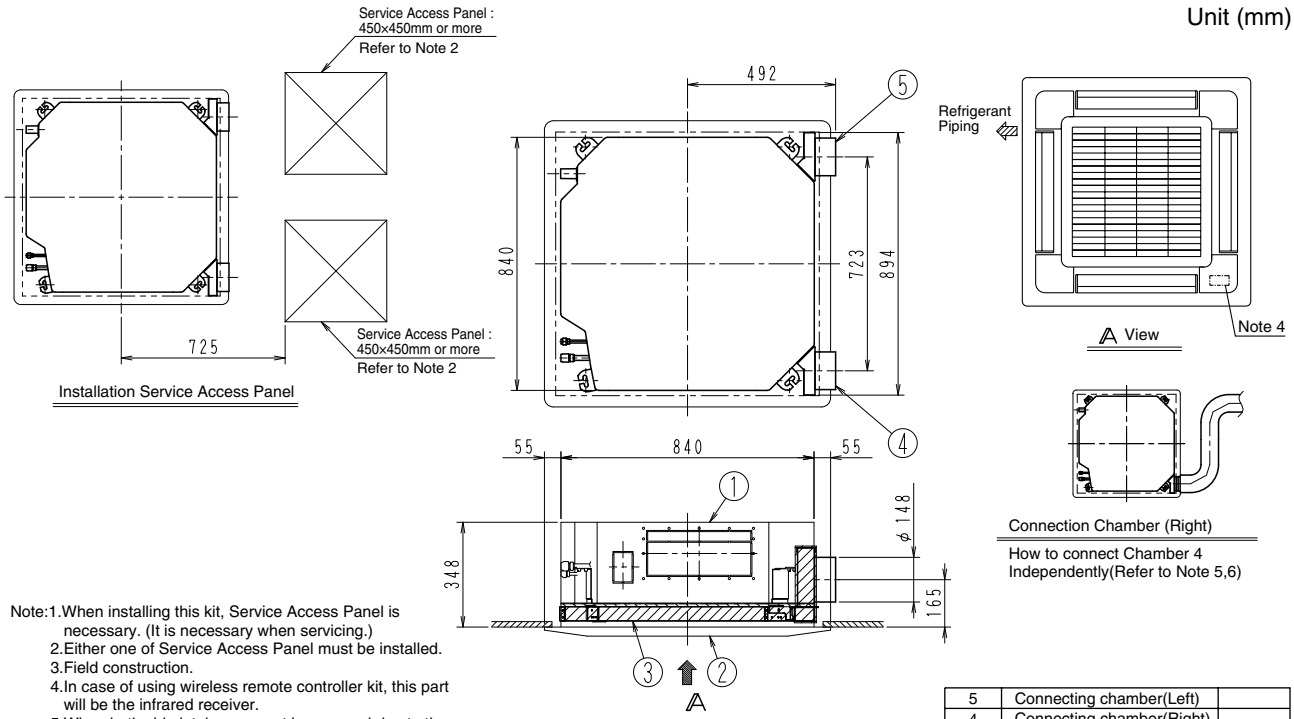


Note:1.When installing this kit, Service Access Panel is necessary. (It is necessary when servicing.)
2.Either one of Service Access Panel must be installed.
3.Field construction.
4.In case of using wireless remote controller kit, this part will be the infrared receiver.
5.When both side intakes can not be ensured due to the obstacles, one side intake is acceptable.
6.When installing the wireless infrared receiver to the unit, air inlet must be on the right side as shown.

| Number | Name | Description |
|---|---|---|
| 5 | Connecting chamber(Left) | |
| 4 | Connecting chamber(Right) | |
| 3 | Suction chamber | |
| 2 | Decoration panel | |
| 1 | Indoor unit | |

JC : 3D032984D

## 5.1.4 FHC-NU with fresh air intake kit (With T-joint, Without duct fan)

### KDDP55D160K for FHC18~26NUV1

Unit (mm)

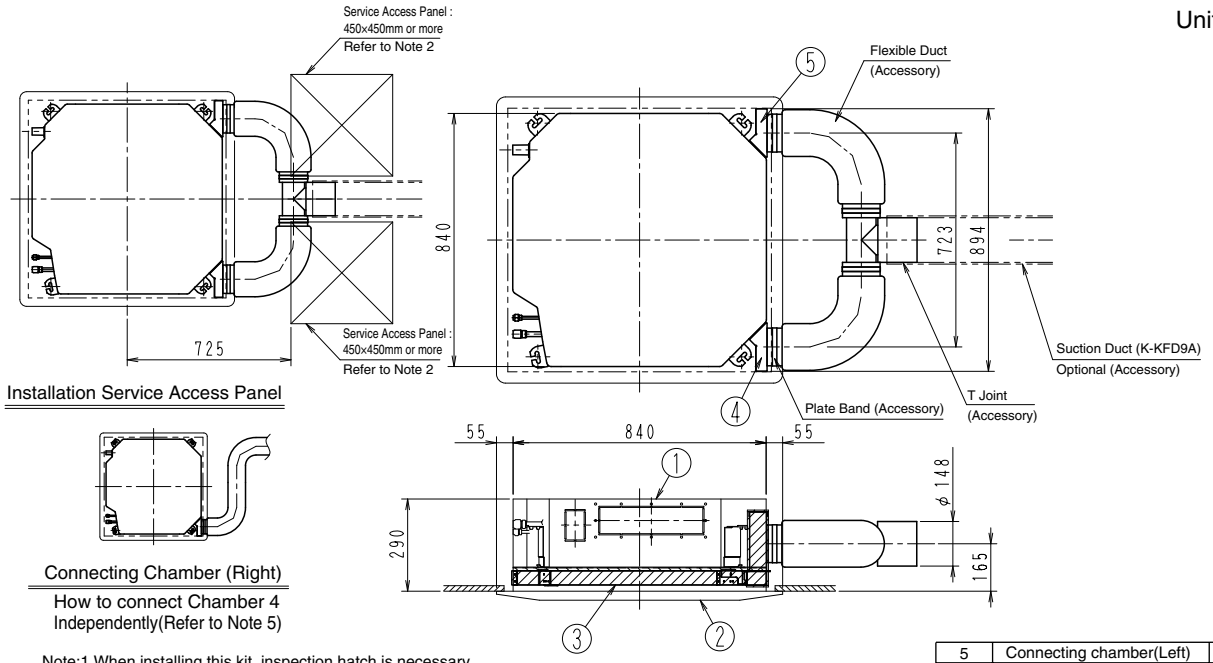


Note:1.When installing this kit, inspection hatch is necessary.
(It is necessary when servicing.)
2.Either one of inspection hatch must be installed.
3.Field construction.
4.This kit does not take together with Wireless Remote Controller kit.
5.When both side intakes can not be ensured due to the obstacles, one side intake is acceptable.

| Number | Name | Description |
|---|---|---|
| 5 | Connecting chamber(Left) | |
| 4 | Connecting chamber(Right) | |
| 3 | Suction chamber | |
| 2 | Decoration panel | |
| 1 | Indoor unit | |

JC : 3D032987D

### KDDP55D160K for FHC30~48NUV1

Unit (mm)

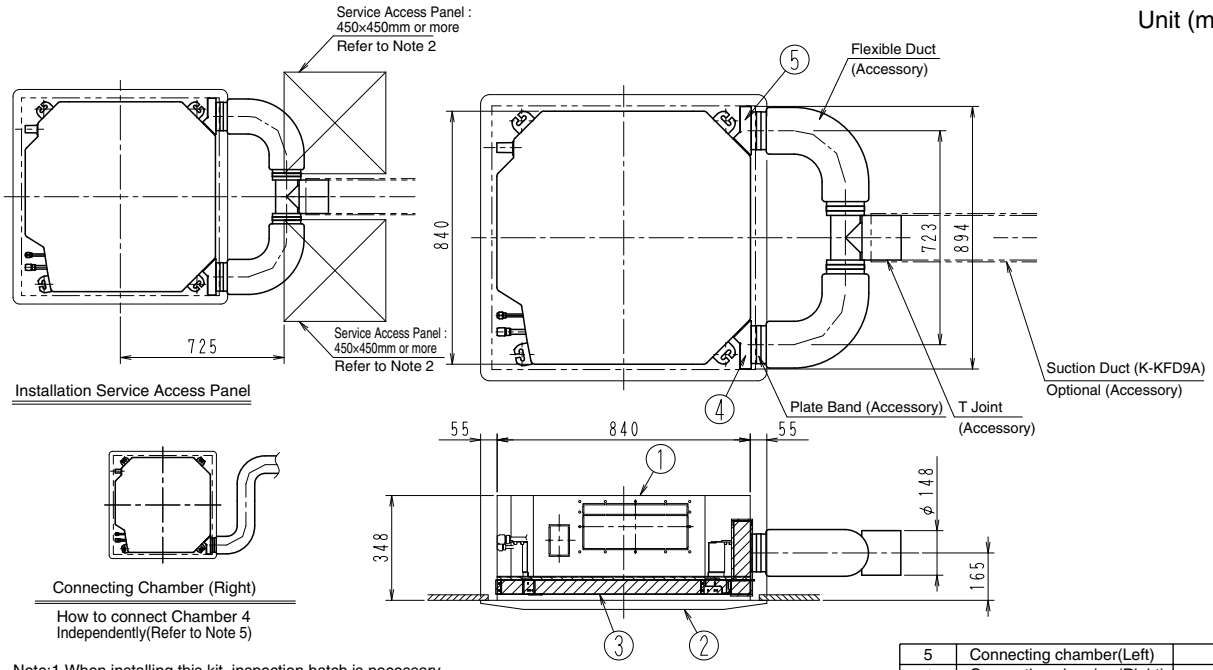


Note:1.When installing this kit, inspection hatch is necessary.
(It is necessary when servicing.)
2.Either one of inspection hatch must be installed.
3.Field construction.
4.This kit does not take together with Wireless Remote Controller kit.
5.When both side intakes can not be ensured due to the obstacles, one side intake is acceptable.

| Number | Name | Description |
|---|---|---|
| 5 | Connecting chamber(Left) | |
| 4 | Connecting chamber(Right) | |
| 3 | Suction chamber | |
| 2 | Decoration panel | |
| 1 | Indoor unit | |

J : 3D032990D

## 5.1.5 FHC-NU with Panel spacer

### KDBP55H160WA for FHC18~26NUV1

Unit (mm)

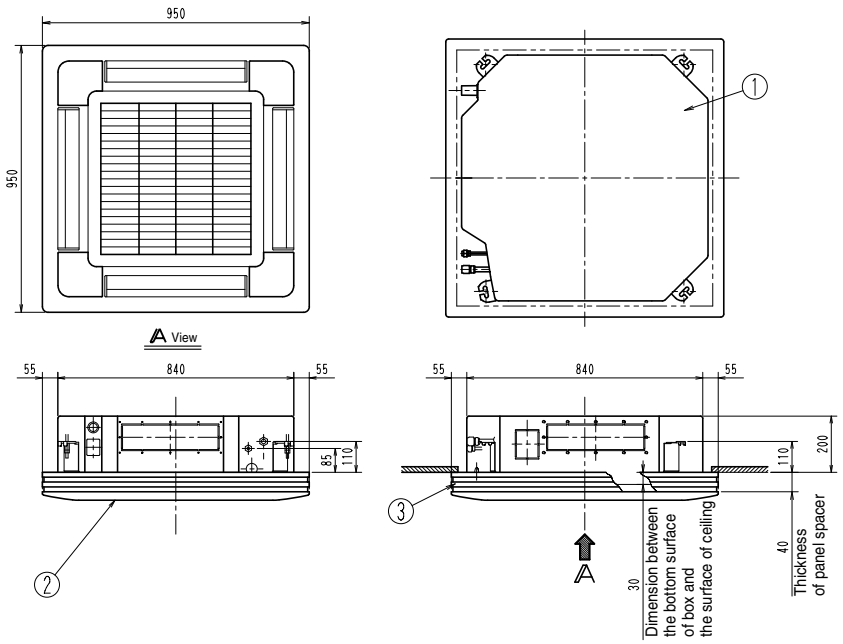


| Number | Name | Description |
|---|---|---|
| 3 | Panel spacer | |
| 2 | Decoration panel | |
| 1 | Indoor unit | |

Note:When other optional kit is installed, refer to the installation drawing of its optional kit

JC : 3D005390E

### KDBP55H160WA for FHC30~48NUV1

Unit (mm)

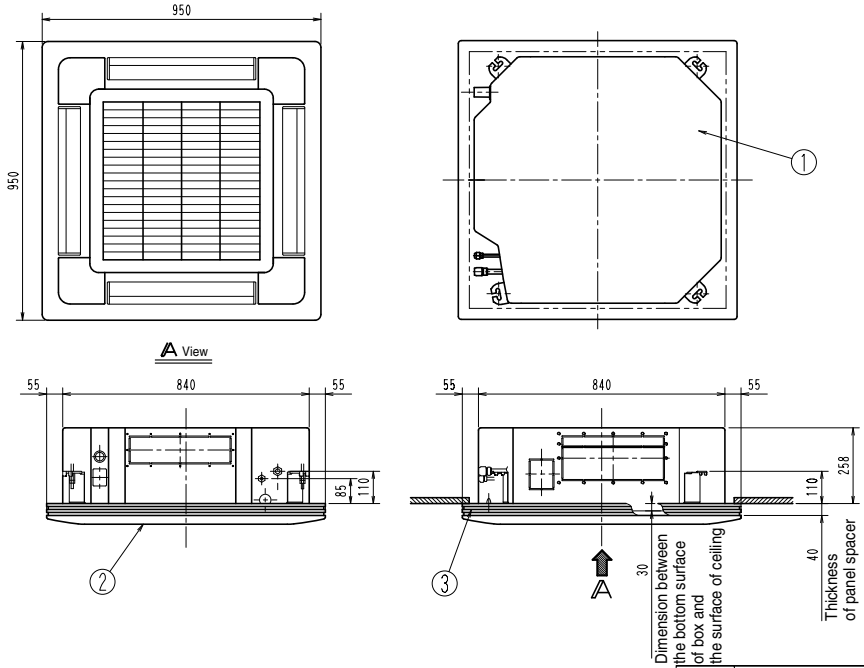


| Number | Name | Description |
|---|---|---|
| 3 | Panel spacer | |
| 2 | Decoration panel | |
| 1 | Indoor unit | |

Note:When other optional kit is installed, refer to the installation drawing of its optional kit

JC : 3D005391D

## 5.1.6 FH-NU (Ceiling suspended type)

### FH21NUV1

Unit (mm)

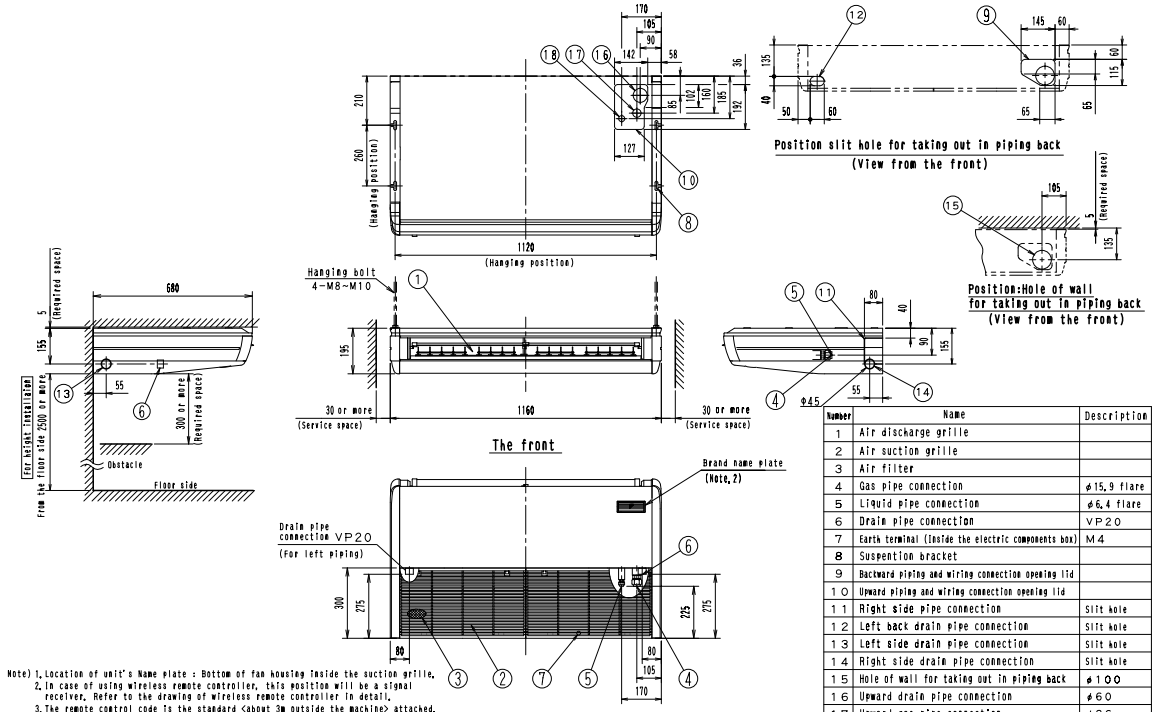


| Number | Name | Description |
|---|---|---|
| 1 | Air discharge grille | |
| 2 | Air suction grille | |
| 3 | Air filter | |
| 4 | Gas pipe connection | ϕ15.9 flare |
| 5 | Liquid pipe connection | ϕ6.4 flare |
| 6 | Drain pipe connection | VP20 |
| 7 | Earth terminal (Inside the electric components box) | M4 |
| 8 | Suspention bracket | |
| 9 | Backward piping and wiring connection opening lid | |
| 10 | Upward piping and wiring connection opening lid | |
| 11 | Right side pipe connection | Slit hole |
| 12 | Left back drain pipe connection | Slit hole |
| 13 | Left side drain pipe connection | Slit hole |
| 14 | Right side drain pipe connection | Slit hole |
| 15 | Hole of wall for taking out in piping back | ϕ100 |
| 16 | Upward drain pipe connection | ϕ60 |
| 17 | Upward gas pipe connection | ϕ36 |
| 18 | Upward liquid pipe connection | ϕ26 |

Note) 1. Location of unit's Name plate : Bottom of fan housing inside the suction grille.
2. In case of using wireless remote controller, this position will be a signal receiver. Refer to the drawing of wireless remote controller in detail.
3. The remote control code is the standard <about 3m outside the machine> attached. (0.5mm²×2wires×0.D. ϕ5.4) (It is not attached to VRV.)

3D054277A

### FH26NUV1

Unit (mm)

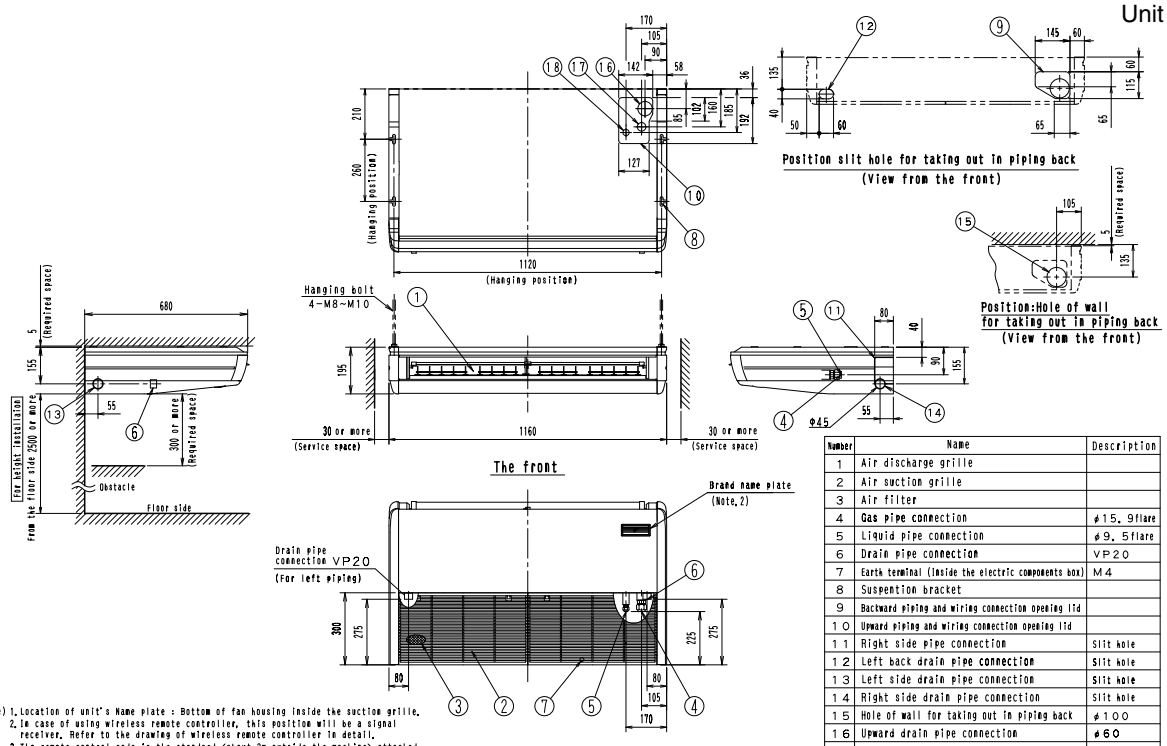


| Number | Name | Description |
|---|---|---|
| 1 | Air discharge grille | |
| 2 | Air suction grille | |
| 3 | Air filter | |
| 4 | Gas pipe connection | ϕ15.9flare |
| 5 | Liquid pipe connection | ϕ9.5flare |
| 6 | Drain pipe connection | VP20 |
| 7 | Earth terminal (Inside the electric components box) | M4 |
| 8 | Suspention bracket | |
| 9 | Backward piping and wiring connection opening lid | |
| 10 | Upward piping and wiring connection opening lid | |
| 11 | Right side pipe connection | Slit hole |
| 12 | Left back drain pipe connection | Slit hole |
| 13 | Left side drain pipe connection | Slit hole |
| 14 | Right side drain pipe connection | Slit hole |
| 15 | Hole of wall for taking out in piping back | ϕ100 |
| 16 | Upward drain pipe connection | ϕ60 |
| 17 | Upward gas pipe connection | ϕ36 |
| 18 | Upward liquid pipe connection | ϕ26 |

Note) 1. Location of unit's Name plate : Bottom of fan housing inside the suction grille.
2. In case of using wireless remote controller, this position will be a signal receiver. Refer to the drawing of wireless remote controller in detail.
3. The remote control code is the standard <about 3m outside the machine> attached. (0.5mm²×2wires×0.D. ϕ5.4) (It is not attached to VRV.)

3D027538F

1

## FH30NUV1

Unit (mm)

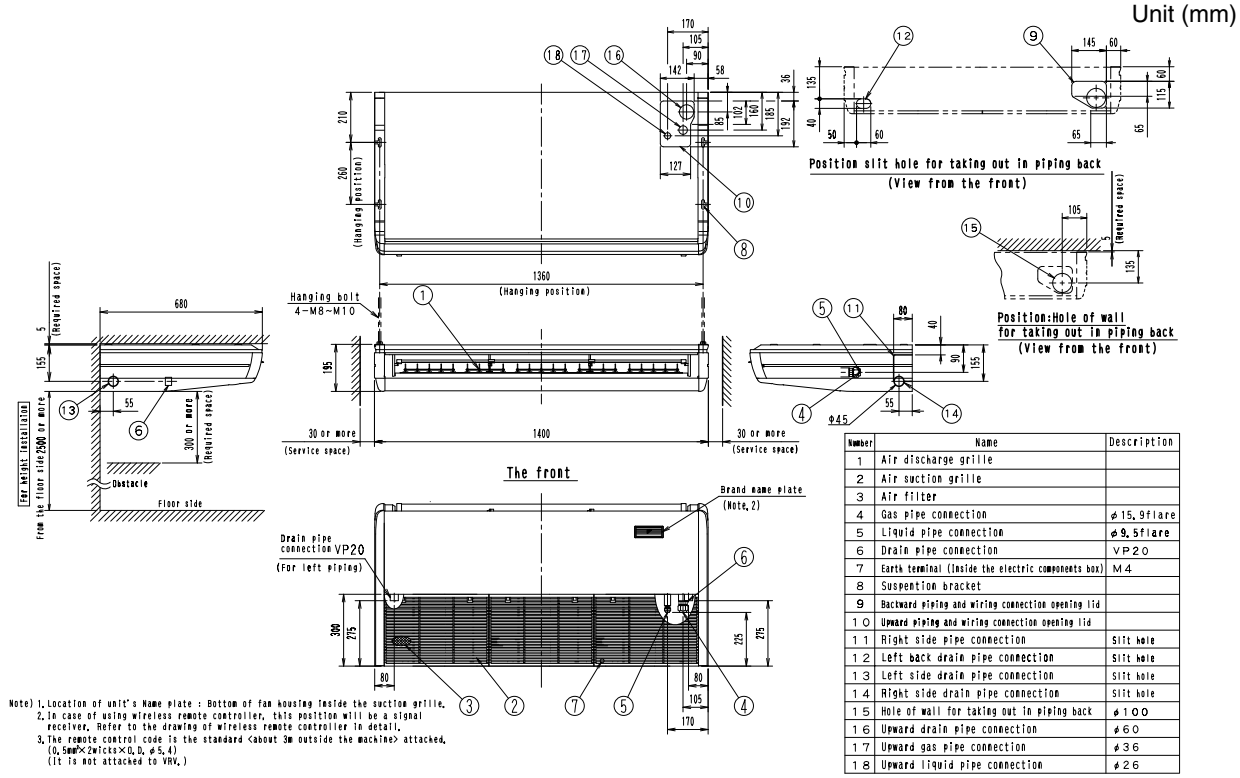


| Number | Name | Description |
|---|---|---|
| 1 | Air discharge grille | |
| 2 | Air suction grille | |
| 3 | Air filter | |
| 4 | Gas pipe connection | φ15.9flare |
| 5 | Liquid pipe connection | φ9.5flare |
| 6 | Drain pipe connection | VP20 |
| 7 | Earth terminal (Inside the electric components box) | M4 |
| 8 | Suspention bracket | |
| 9 | Backward piping and wiring connection opening lid | |
| 10 | Upward piping and wiring connection opening lid | |
| 11 | Right side pipe connection | Slit hole |
| 12 | Left back drain pipe connection | Slit hole |
| 13 | Left side drain pipe connection | Slit hole |
| 14 | Right side drain pipe connection | Slit hole |
| 15 | Hole of wall for taking out in piping back | φ100 |
| 16 | Upward drain pipe connection | φ60 |
| 17 | Upward gas pipe connection | φ36 |
| 18 | Upward liquid pipe connection | φ26 |

3D054265A

## FH36NUV1 / FH42NUV1 / FH48NUV1

Unit (mm)

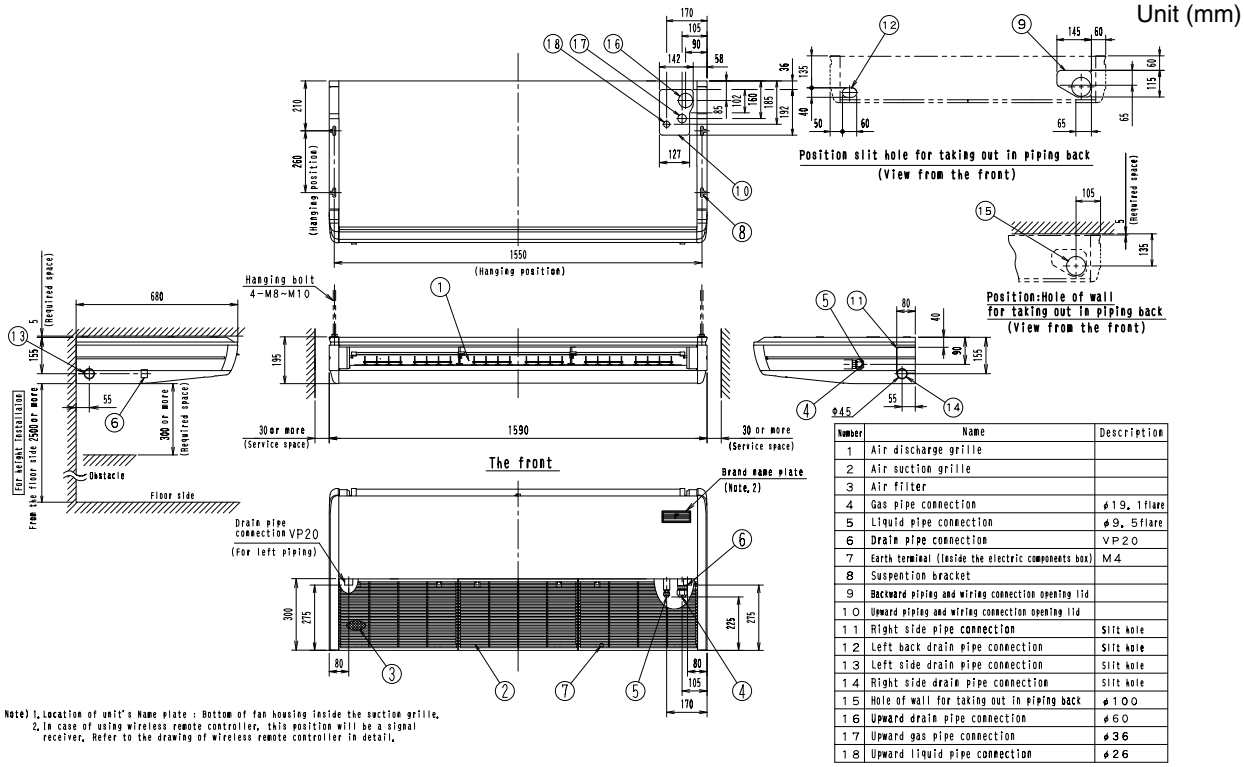


| Number | Name | Description |
|---|---|---|
| 1 | Air discharge grille | |
| 2 | Air suction grille | |
| 3 | Air filter | |
| 4 | Gas pipe connection | φ19.1flare |
| 5 | Liquid pipe connection | φ9.5flare |
| 6 | Drain pipe connection | VP20 |
| 7 | Earth terminal (Inside the electric components box) | M4 |
| 8 | Suspention bracket | |
| 9 | Backward piping and wiring connection opening lid | |
| 10 | Upward piping and wiring connection opening lid | |
| 11 | Right side pipe connection | Slit hole |
| 12 | Left back drain pipe connection | Slit hole |
| 13 | Left side drain pipe connection | Slit hole |
| 14 | Right side drain pipe connection | Slit hole |
| 15 | Hole of wall for taking out in piping back | φ100 |
| 16 | Upward drain pipe connection | φ60 |
| 17 | Upward gas pipe connection | φ36 |
| 18 | Upward liquid pipe connection | φ26 |

3D052469

## 5.1.7 FDBG-NU (Duct connection low static pressure type)

### FDBG18NUV1

Unit (mm)

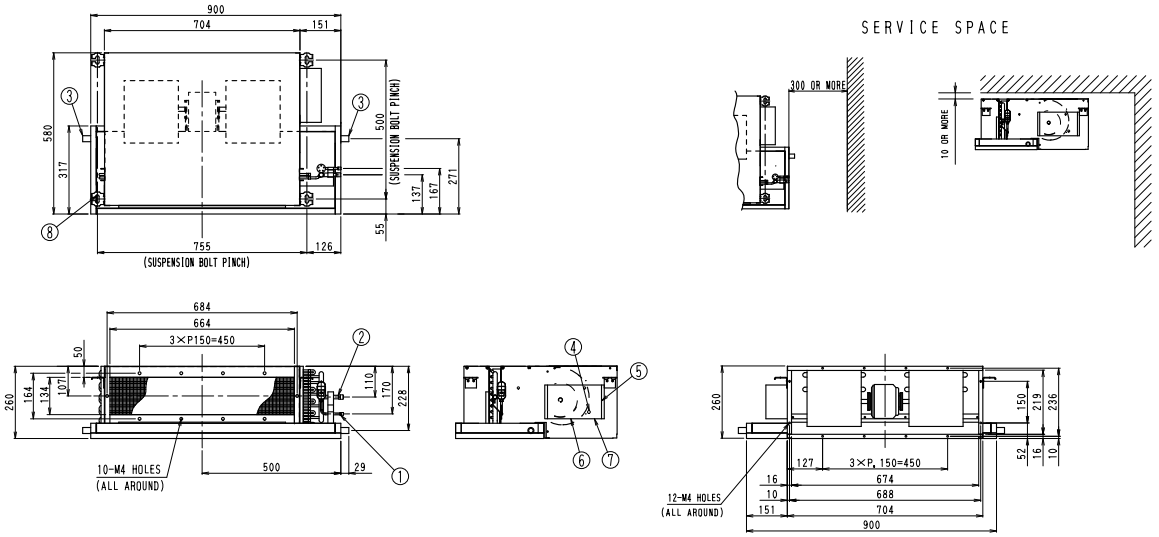


NOTE)1. LOCATION OF UNIT'S NAME PLATE : CHAMBER CAP.

| NUMBER | NAME | DESCRIPTION |
|---|---|---|
| 8 | SUSPENSION BRACKET | M10 |
| 7 | CONTROL WIRING INTAKE | FOR OUTDOOR UNIT |
| 6 | CONTROL WIRING INTAKE | FOR REMOTE CONTROLLER |
| 5 | SWITCH BOX | |
| 4 | GROUND TERMINAL | M4(IN SWITCH BOX) |
| 3 | DRAIN PIPE CONNECTION | 3/4B(OD φ 27.2, ID φ 21.6) |
| 2 | GAS PIPE CONNECTION | φ15.9 FLARE CONNECTION |
| 1 | LIQUID PIPE CONNECTION | φ6.4 FLARE CONNECTION |

3D048541A

### FDBG21NUV1

Unit (mm)

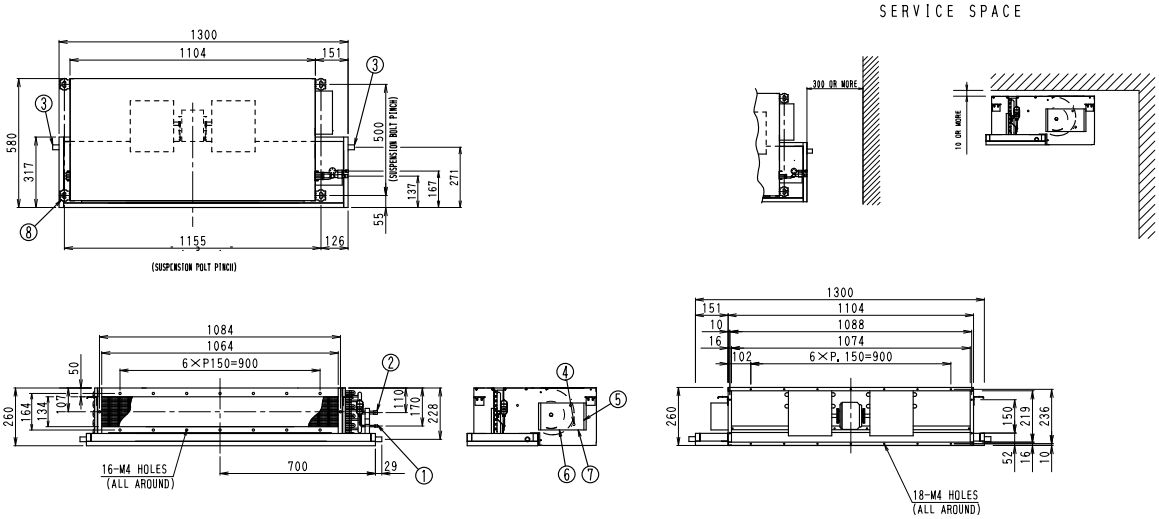


NOTE)1. LOCATION OF UNIT'S NAME PLATE : CHAMBER CAP.

| NUMBER | NAME | DESCRIPTION |
|---|---|---|
| 8 | SUSPENSION BRACKET | M10 |
| 7 | CONTROL WIRING INTAKE | FOR OUTDOOR UNIT |
| 6 | CONTROL WIRING INTAKE | FOR REMOTE CONTROLLER |
| 5 | SWITCH BOX | |
| 4 | GROUND TERMINAL | M4(IN SWITCH BOX) |
| 3 | DRAIN PIPE CONNECTION | 3/4B(OD φ 27.2, ID φ 21.6) |
| 2 | GAS PIPE CONNECTION | φ15.9 FLARE CONNECTION |
| 1 | LIQUID PIPE CONNECTION | φ6.4 FLARE CONNECTION |

3D048542A

1

### FDBG26NUV1

Unit (mm)

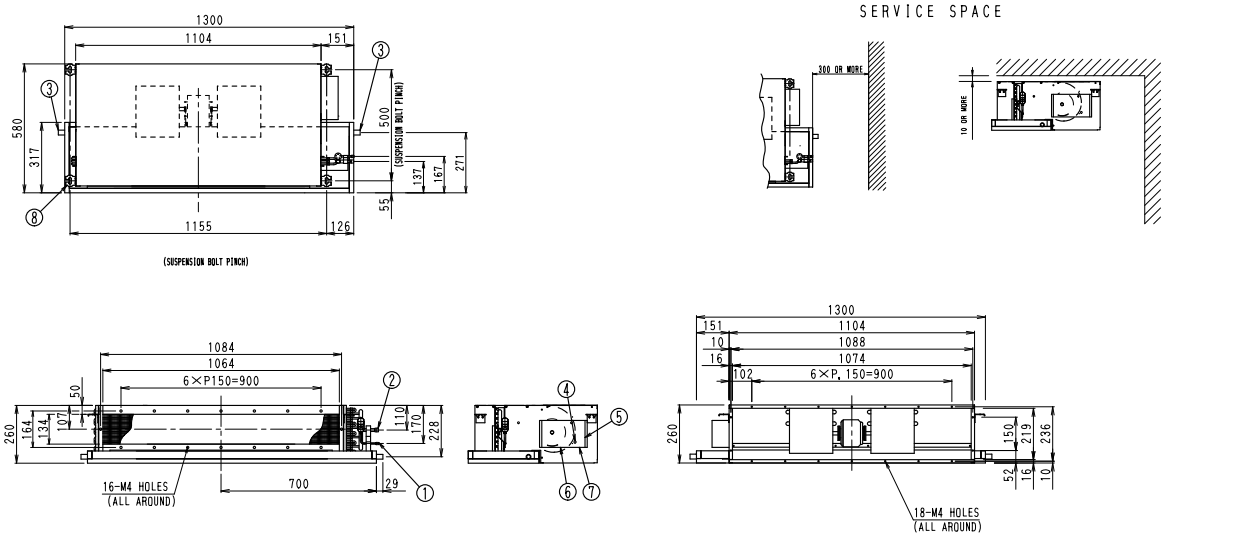


NOTE)1. LOCATION OF UNIT'S NAME PLATE : CHAMBER CAP.

| NUMBER | NAME | DESCRIPTION |
|---|---|---|
| 8 | SUSPENSION BRACKET | M10 |
| 7 | CONTROL WIRING INTAKE | FOR OUTDOOR UNIT |
| 6 | CONTROL WIRING INTAKE | FOR REMOTE CONTROLLER |
| 5 | SWITCH BOX | |
| 4 | GROUND TERMINAL | M4(IN SWITCH BOX) |
| 3 | DRAIN PIPE CONNECTION | 3/4B(OD φ 27.2, ID φ 21.6) |
| 2 | GAS PIPE CONNECTION | φ15.9 FLARE CONNECTION |
| 1 | LIQUID PIPE CONNECTION | φ9.5 FLARE CONNECTION |

3D048543A

## 5.1.8 FDMG-NU (Duct connection middle static pressure type)

### FDMG26NUV1

Unit (mm)

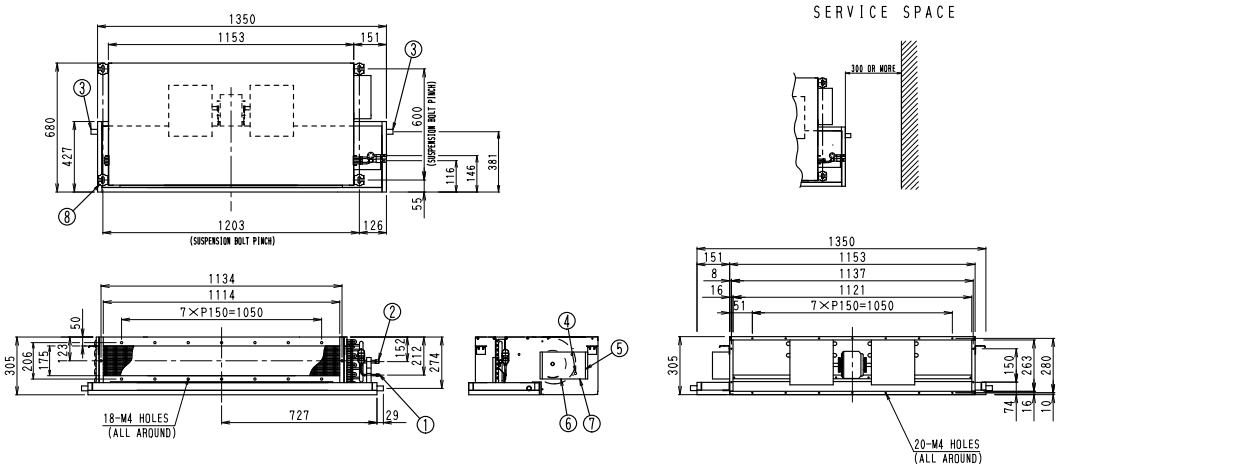


NOTE)1. LOCATION OF UNIT'S NAME PLATE:CHAMBER CAP

| NUMBER | NAME | DESCRIPTION |
|---|---|---|
| 8 | SUSPENSION BRACKET | M10 |
| 7 | CONTROL WIRING INTAKE | FOR OUTDOOR UNIT |
| 6 | CONTROL WIRING INTAKE | FOR REMOTE CONTROLLER |
| 5 | SWITCH BOX | |
| 4 | GROUND TERMINAL | M4(IN SWITCH BOX) |
| 3 | DRAIN PIPE CONNECTION | 3/4B(OD φ 27.2, ID φ 21.6) |
| 2 | GAS PIPE CONNECTION | φ15.9 FLARE CONNECTION |
| 1 | LIQUID PIPE CONNECTION | φ9.5 FLARE CONNECTION |

3D048933B

## FDMG30NUV1

Unit (mm)

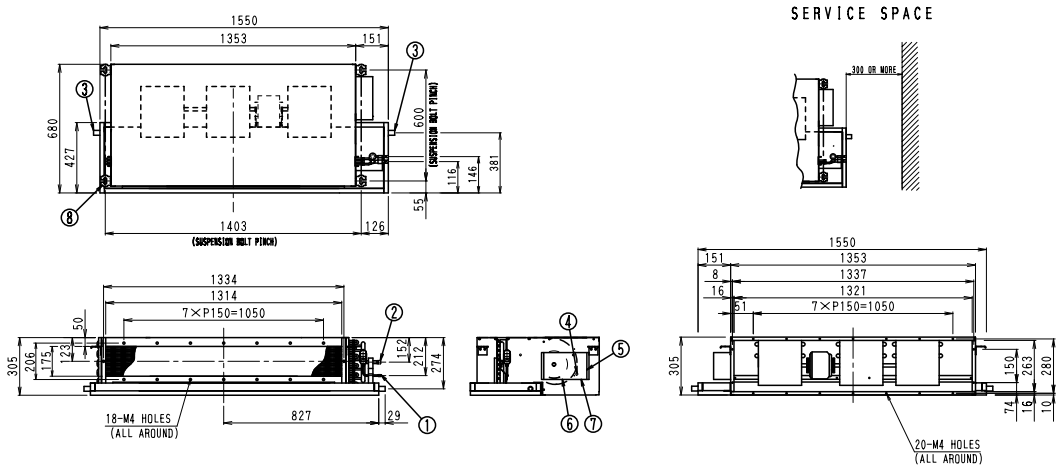


NOTE)1. LOCATION OF UNIT'S NAME PLATE:CHAMBER CAP

| NUMBER | NAME | DESCRIPTION |
|---|---|---|
| 8 | SUSPENSION BRACKET | M10 |
| 7 | CONTROL WIRING INTAKE | FOR OUTDOOR UNIT |
| 6 | CONTROL WIRING INTAKE | FOR REMOTE CONTROLLER |
| 5 | SWITCH BOX | |
| 4 | GROUND TERMINAL | M4(IN SWITCH BOX) |
| 3 | DRAIN PIPE CONNECTION | 3/4B(OD φ 27.2, ID φ 21.6) |
| 2 | GAS PIPE CONNECTION | φ15.9 FLARE CONNECTION |
| 1 | LIQUID PIPE CONNECTION | φ9.5 FLARE CONNECTION |

3D054378A

## FDMG36NUV1 / FDMG42NUV1 / FDMG48NUV1

Unit (mm)

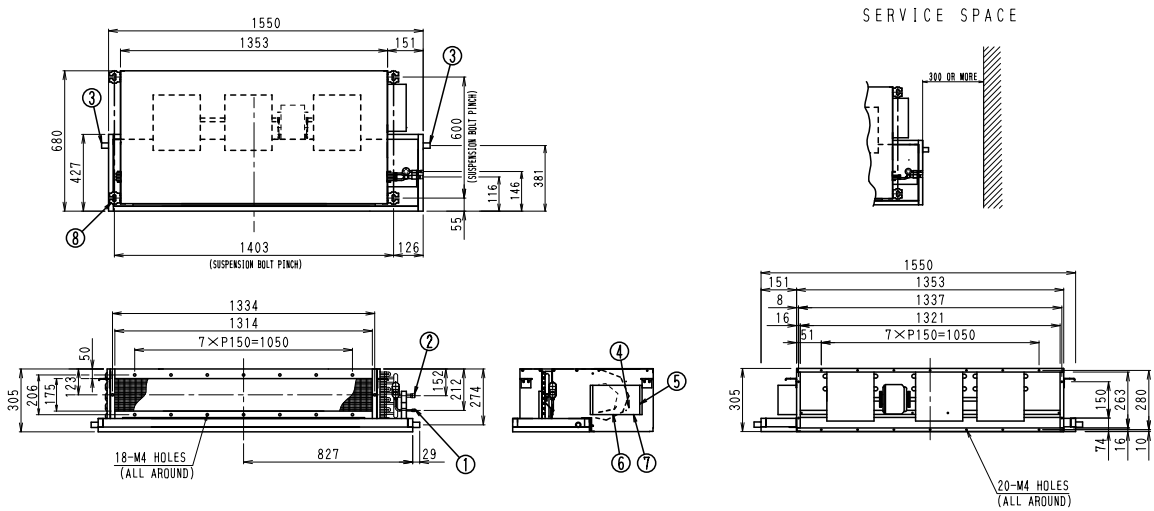


NOTE)1. LOCATION OF UNIT'S NAME PLATE:CHAMBER CAP

| NUMBER | NAME | DESCRIPTION |
|---|---|---|
| 8 | SUSPENSION BRACKET | M10 |
| 7 | CONTROL WIRING INTAKE | FOR OUTDOOR UNIT |
| 6 | CONTROL WIRING INTAKE | FOR REMOTE CONTROLLER |
| 5 | SWITCH BOX | |
| 4 | GROUND TERMINAL | M4(IN SWITCH BOX) |
| 3 | DRAIN PIPE CONNECTION | 3/4B(OD φ 27.2, ID φ 21.6) |
| 2 | GAS PIPE CONNECTION | φ19.1 FLARE CONNECTION |
| 1 | LIQUID PIPE CONNECTION | φ9.5 FLARE CONNECTION |

3D048934B

1

## FDMG51NUV1 / FDMG56NUV1

Unit (mm)

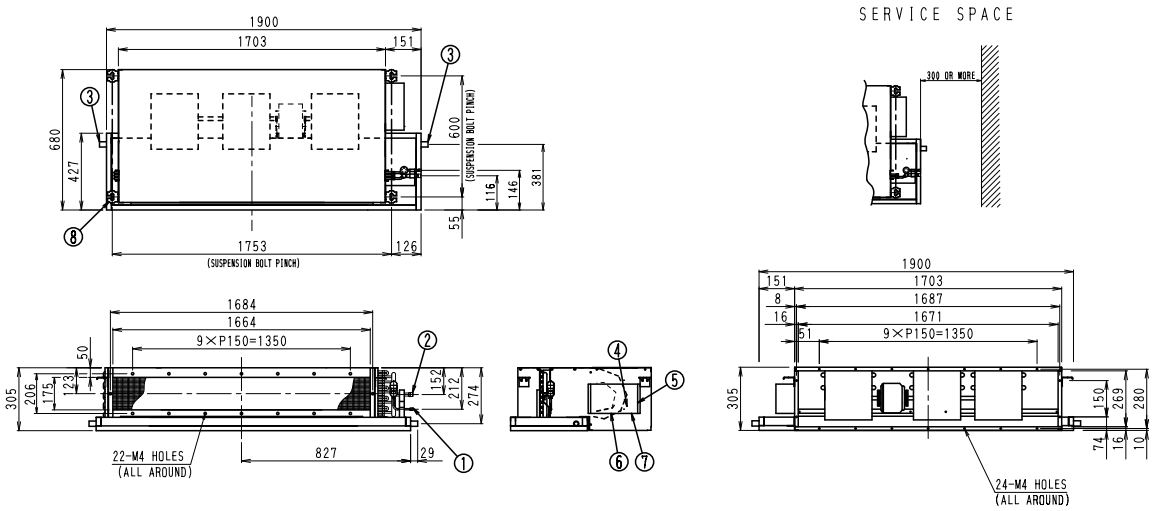


NOTE)1. LOCATION OF UNIT'S NAME PLATE:CHAMBER CAP

| NUMBER | NAME | DESCRIPTION |
|---|---|---|
| 8 | SUSPENSION BRACKET | M10 |
| 7 | CONTROL WIRING INTAKE | FOR OUTDOOR UNIT |
| 6 | CONTROL WIRING INTAKE | FOR REMOTE CONTROLLER |
| 5 | SWITCH BOX | |
| 4 | GROUND TERMINAL | M4(IN SWITCH BOX) |
| 3 | DRAIN PIPE CONNECTION | 3/4B(OD φ 27.2, ID φ 21.6) |
| 2 | GAS PIPE CONNECTION | φ19.1 FLARE CONNECTION |
| 1 | LIQUID PIPE CONNECTION | φ9.5 FLARE CONNECTION |

3D048935B

## 5.2 Wired remote controller

### BRC1C61 (for FHC-NU)

Unit (mm)

NOTE) 1. REMOTE CONTROLLER CORD AND STAPLE ARE NOT ATTACHED. THEY ARE FIELD SUPPLIED PARTS.

• REMOTE CONTROLLER DIMENSIONS

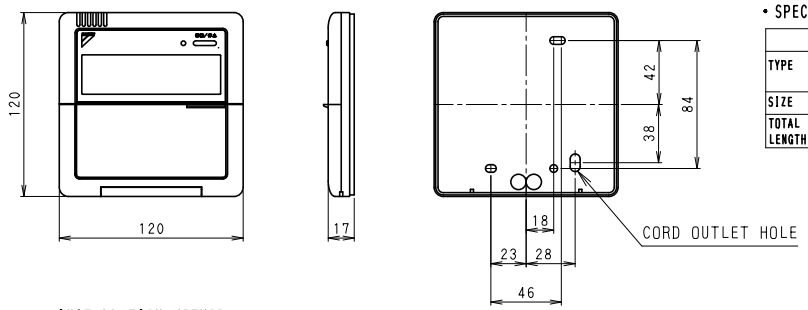


• SPECIFICATIONS OF CORD

| | FOR AUSTRALIA | FOR OTHER COUNTRIES |
|---|---|---|
| TYPE | SHIELD WIRE (INSULATED THICKNESS:1mm OR MORE) | VINYL CORD WITH SHEATH OR CABLE (INSULATED THICKNESS:1mm OR MORE) |
| SIZE | 0.75~1.25mm² | |
| TOTAL LENGTH | 500m | |

• INSTALLATION METHOD

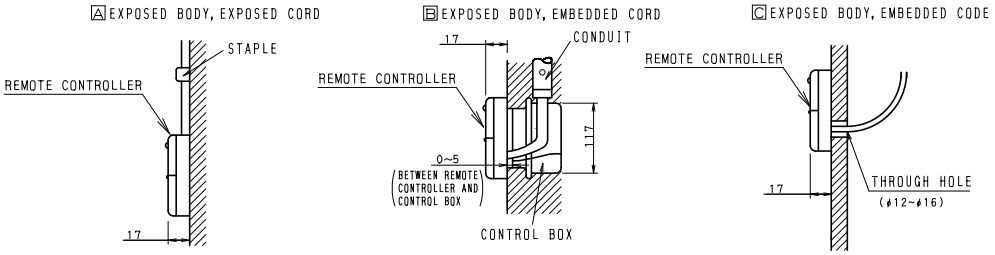


3D028952

### BRC1NU61 (for FH-NU)

Unit (mm)

Note) The dimension of hole

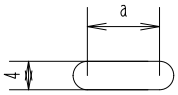


| Hole type | a(mm) |
|---|---|
| A | 6 |
| B | 10 |

○ REMOTE CONTROLLER DIMENSIONS

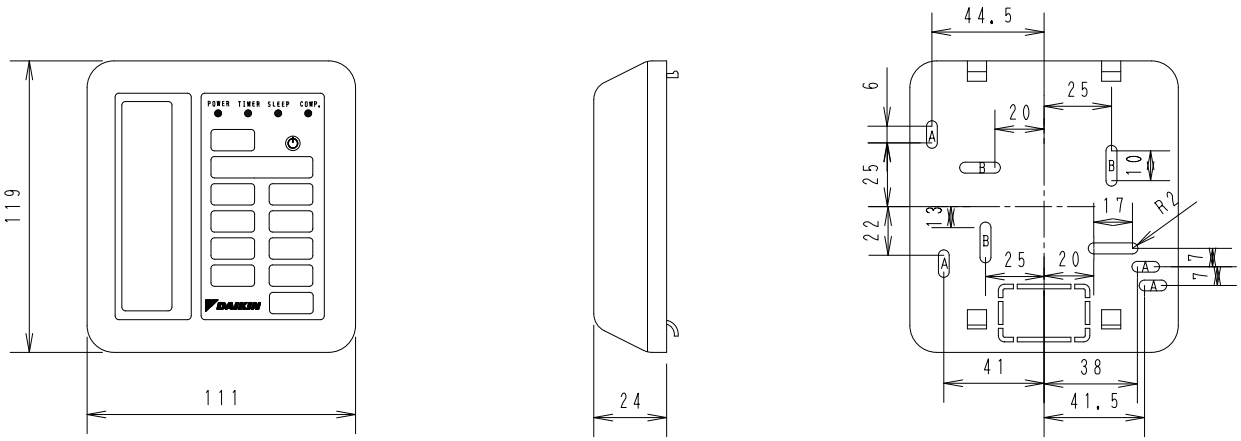


3D052351

**KRC47-1A (Mechanical remote controller) (for FDBG-NU and FDMG-NU)**

Unit (mm)

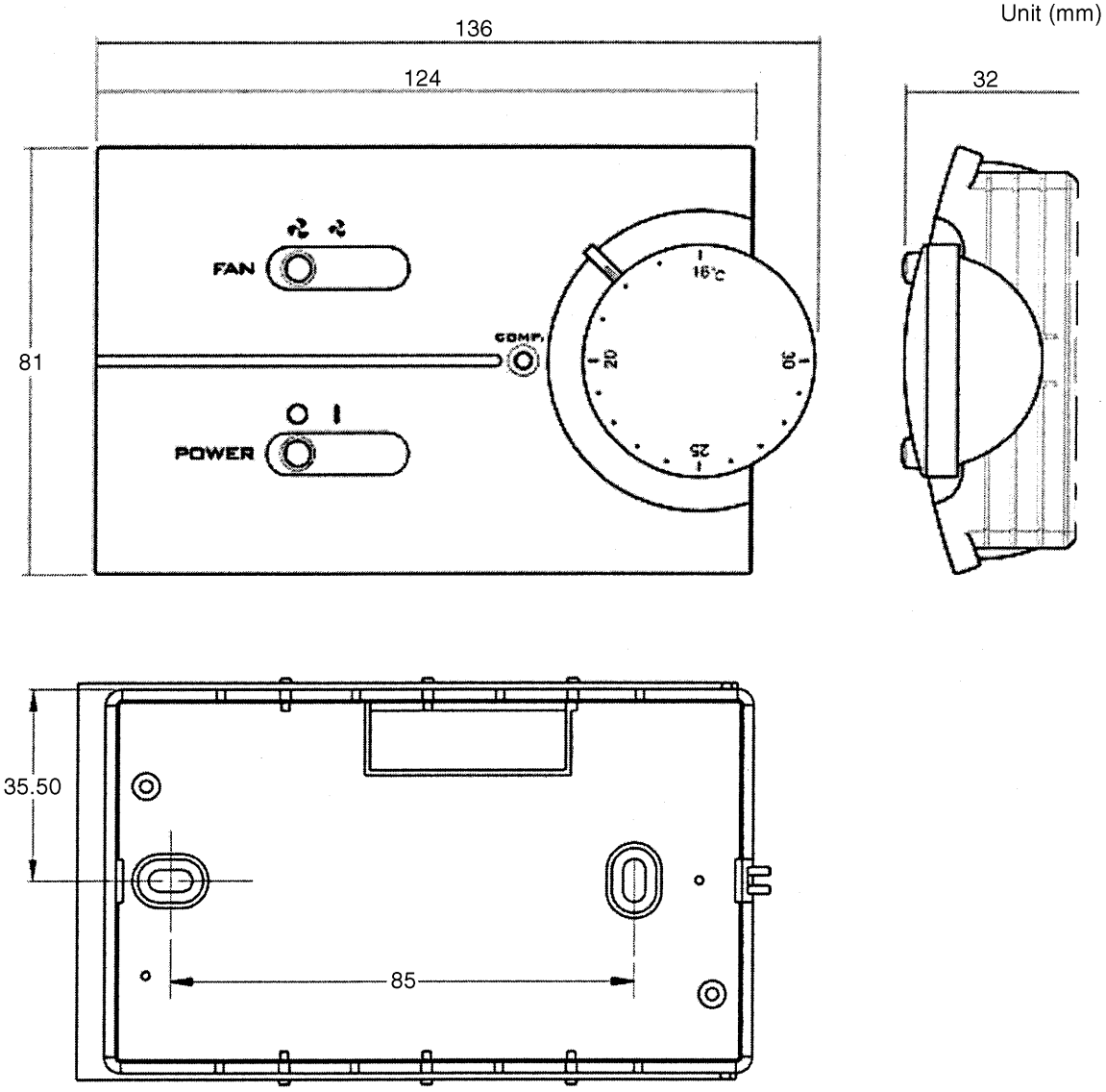


AS1603348

## KRC47-2A (Digital remote controller) (for FDBG-NU and FDMG-NU)

KRC47-2A contains the following parts, and they are packed in one carton.

Unit (mm)

**1. Display unit**

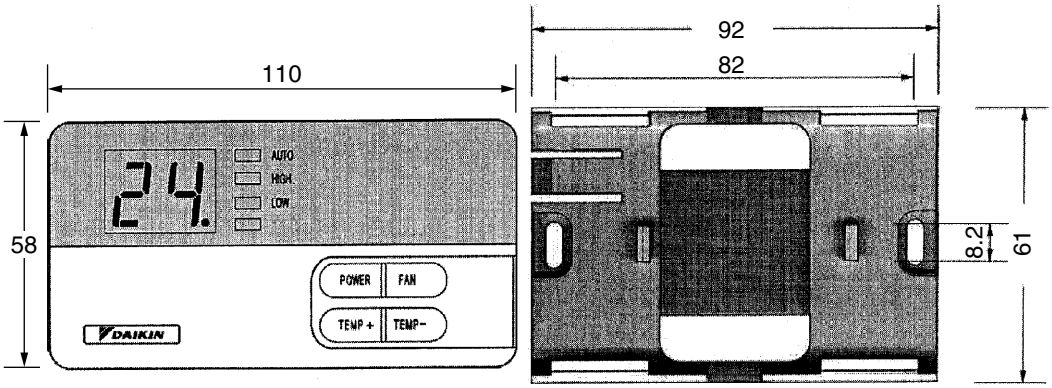


**2. Main control board**

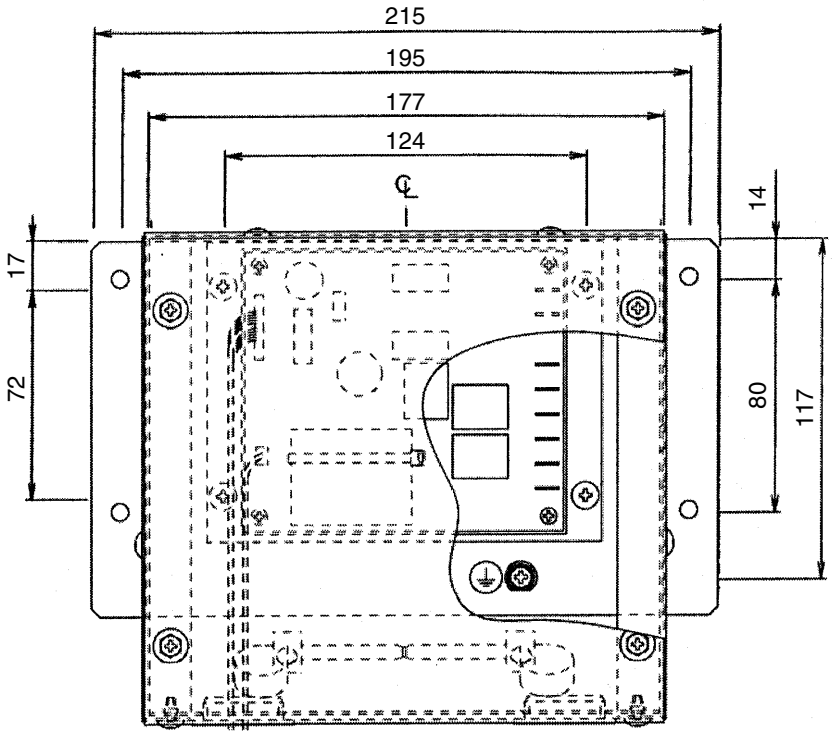


**3. Cable**

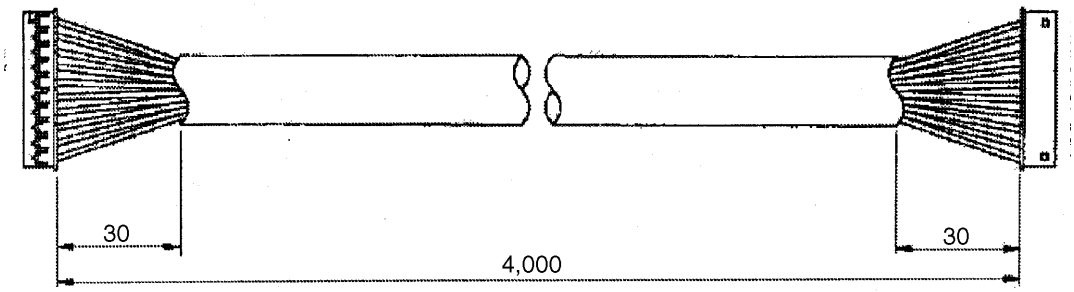


**4. Manual**

AS1603350B

**KRC47-4A (Digital remote controller for duct heater use) (for FDBG-NU and FDMG-NU)**

KRC47-4A contains the following parts, and they are packed in one catron.

Unit (mm)

**1. Display unit**

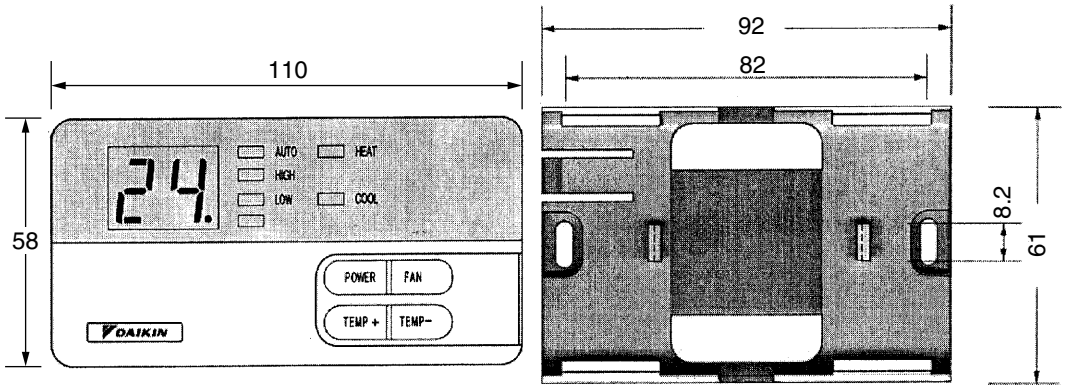


For other parts **2. Main control board** and **3. Cable** will be the same as KRC47-2A.

**4. Manual**

AS1603351B

## 5.3 Wireless remote controller

### BRC7C613W (for FHC-NU)

Unit (mm)

• REMOTE CONTROLLER DIMENSIONS

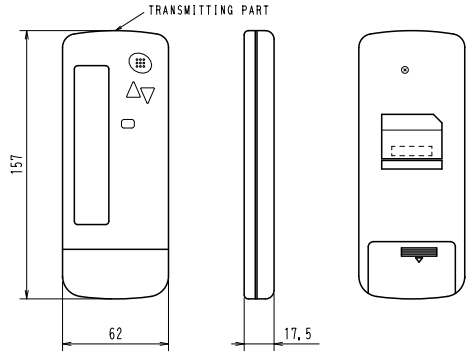


• REMOTE CONTROLLER HOLDER INSTALLATION PROCEDURE
<INSTALLATION TO WALL SURFACE>

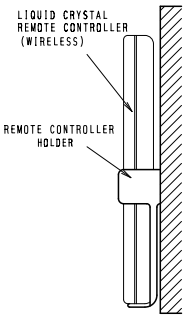


• RECEIVER INSTALLATION PROCEDURE

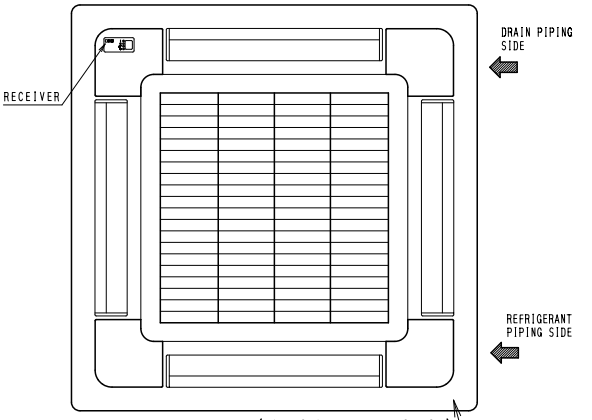


• RECEIVER DETAIL

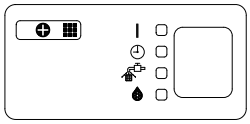

• WIRELESS REMOTE CONTROLLER KIT FOR EACH DECORATION PANEL

| WIRELESS REMOTE CONTROLLER KIT | DECORATION PANEL |
|---|---|
| BRC7C612W<br>BRC7C613W | BYC125K-W1・W2 |
| BRC7C612WC<br>BRC7C613WC | BYC125K-W2C |
| BRC7C512W BRC7CA512W<br>BRC7C513W BRC7CA513W | BYC125KJW1 |
| BRC7C613WS | BYC125K-W1S |

3D005912D

### BRC7NU66 (for FH-NU)

Unit (mm)

• REMOTE CONTROLLER DIMENSIONS

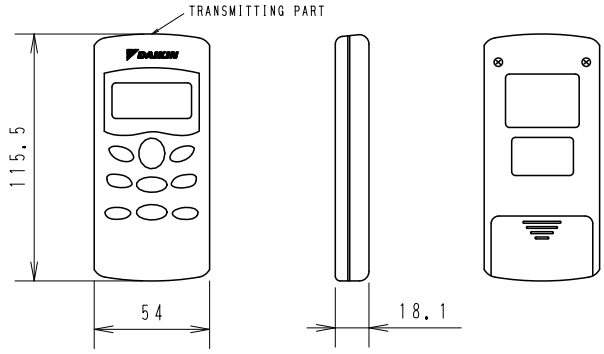


• REMOTE CONTROLLER HOLDER INSTALLATION PROCEDURE
<INSTALLATION TO WALL SURFACE>

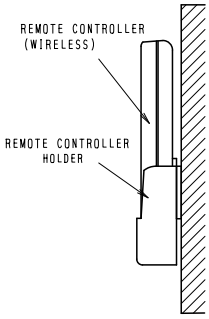


• RECEIVER INSTALLATION PROCEDURE

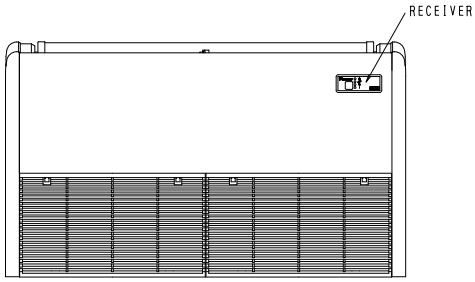


• RECEIVER DETAIL

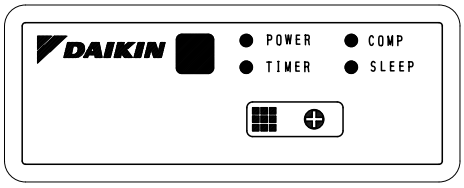


3D052347

## 5.4 Outdoor unit



### R18NUV1

Unit (mm)

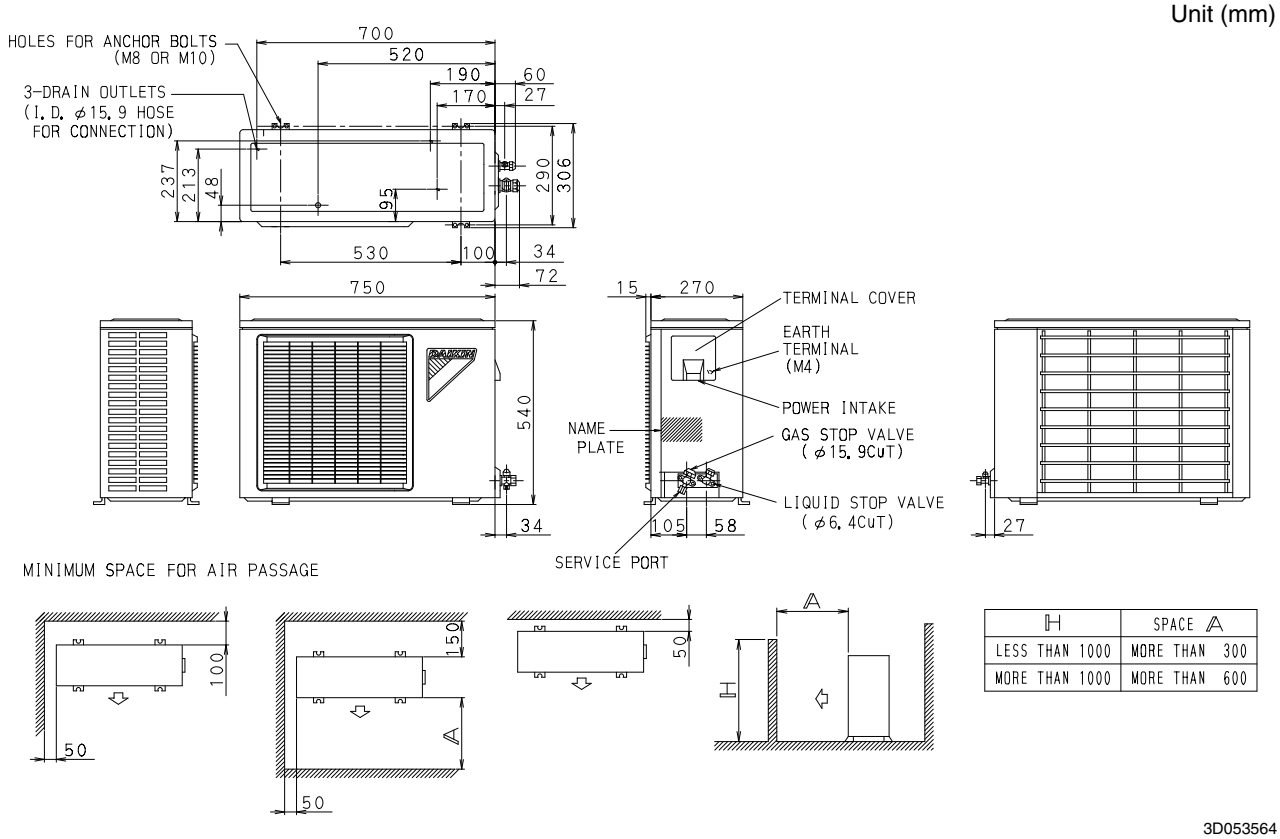


| H | SPACE A |
|---|---|
| LESS THAN 1000 | MORE THAN 300 |
| MORE THAN 1000 | MORE THAN 600 |

3D053564

### R21NUV1

Unit (mm)

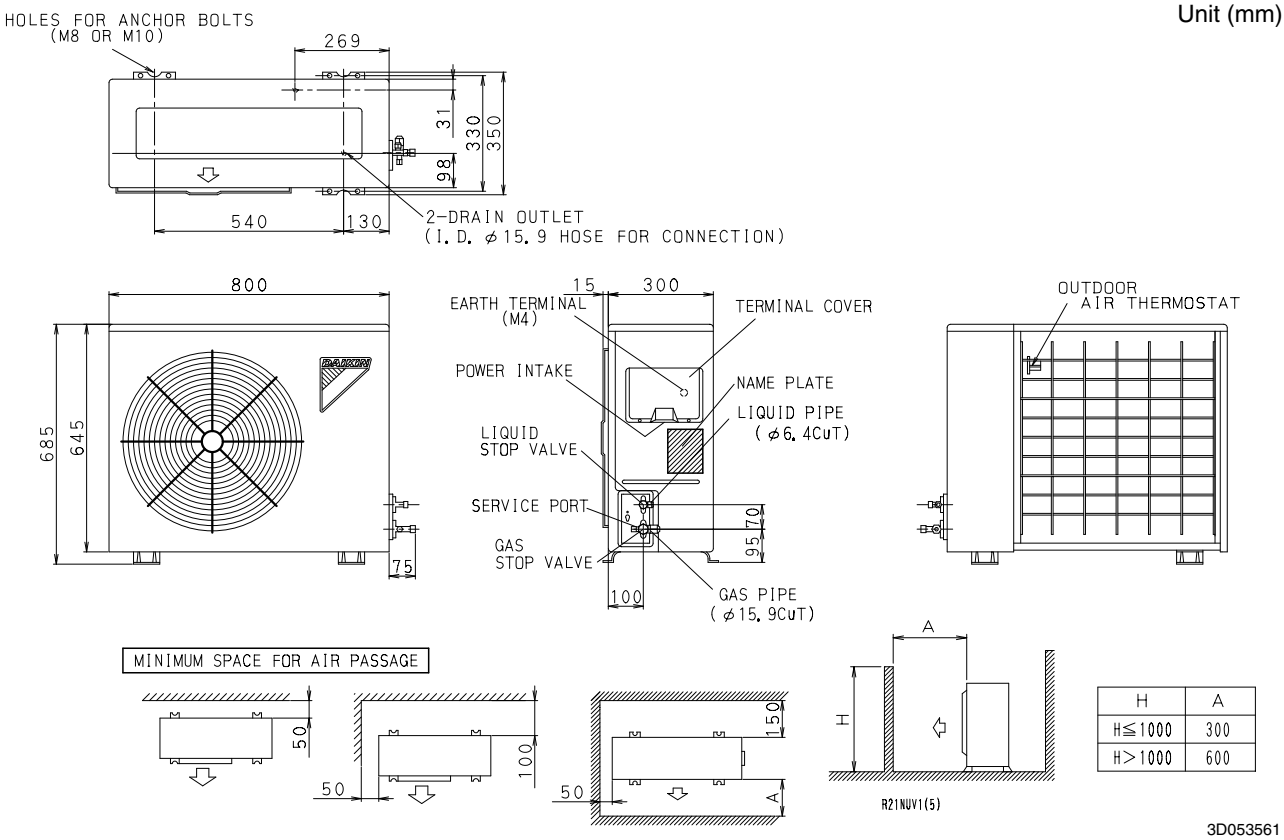


| H | A |
|---|---|
| H≦1000 | 300 |
| H>1000 | 600 |

3D053561

### R26NUV1 / R26NUY1 / R30NUV1 / R30NUY1

Unit (mm)

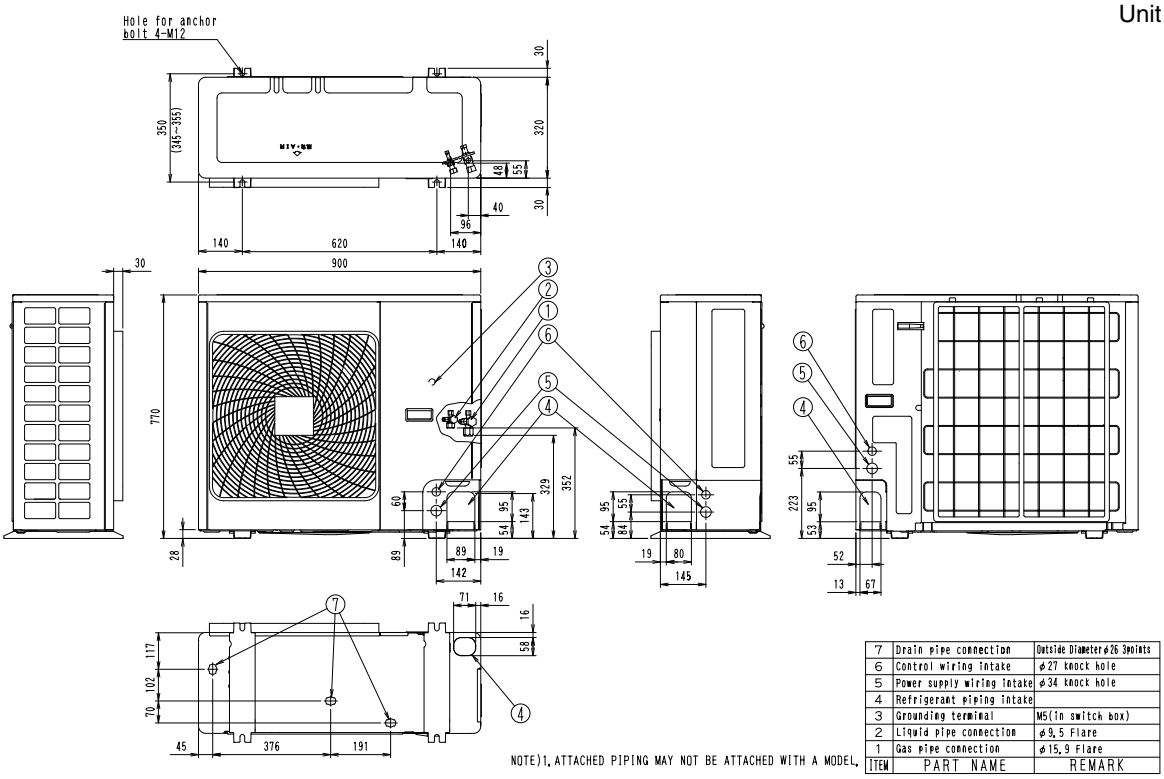


NOTE)1. ATTACHED PIPING MAY NOT BE ATTACHED WITH A MODEL.

| ITEM | PART NAME | REMARK |
|---|---|---|
| 7 | Drain pipe connection | Outside Diameter φ26 3points |
| 6 | Control wiring intake | φ27 knock hole |
| 5 | Power supply wiring intake | φ34 knock hole |
| 4 | Refrigerant piping intake | |
| 3 | Grounding terminal | M5(in switch box) |
| 2 | Liquid pipe connection | φ9.5 Flare |
| 1 | Gas pipe connection | φ15.9 Flare |

3D054206A

### R36NUV1 / R36NUY1

Unit (mm)

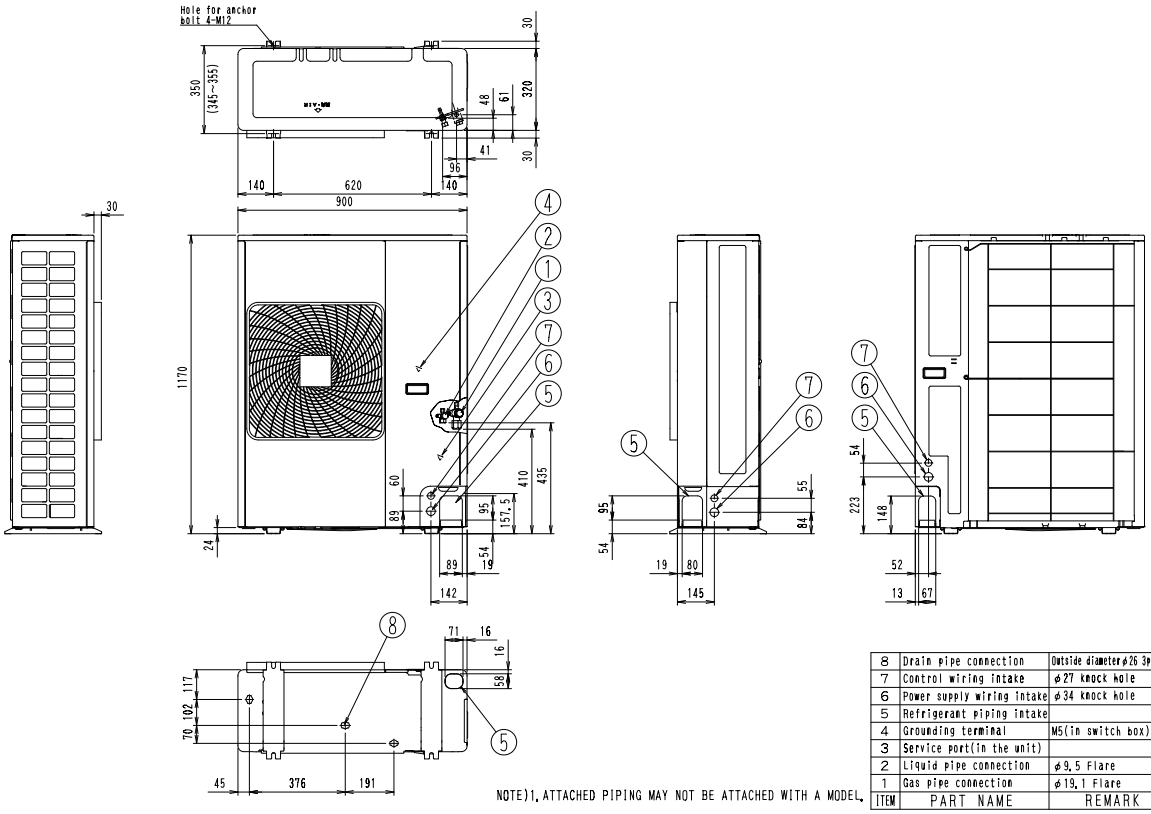


NOTE)1. ATTACHED PIPING MAY NOT BE ATTACHED WITH A MODEL.

| ITEM | PART NAME | REMARK |
|---|---|---|
| 8 | Drain pipe connection | Outside diameter φ26 3points |
| 7 | Control wiring intake | φ27 knock hole |
| 6 | Power supply wiring intake | φ34 knock hole |
| 5 | Refrigerant piping intake | |
| 4 | Grounding terminal | M5(in switch box) |
| 3 | Service port(in the unit) | |
| 2 | Liquid pipe connection | φ9.5 Flare |
| 1 | Gas pipe connection | φ19.1 Flare |

3D052425

## R42NUY1

Unit (mm)

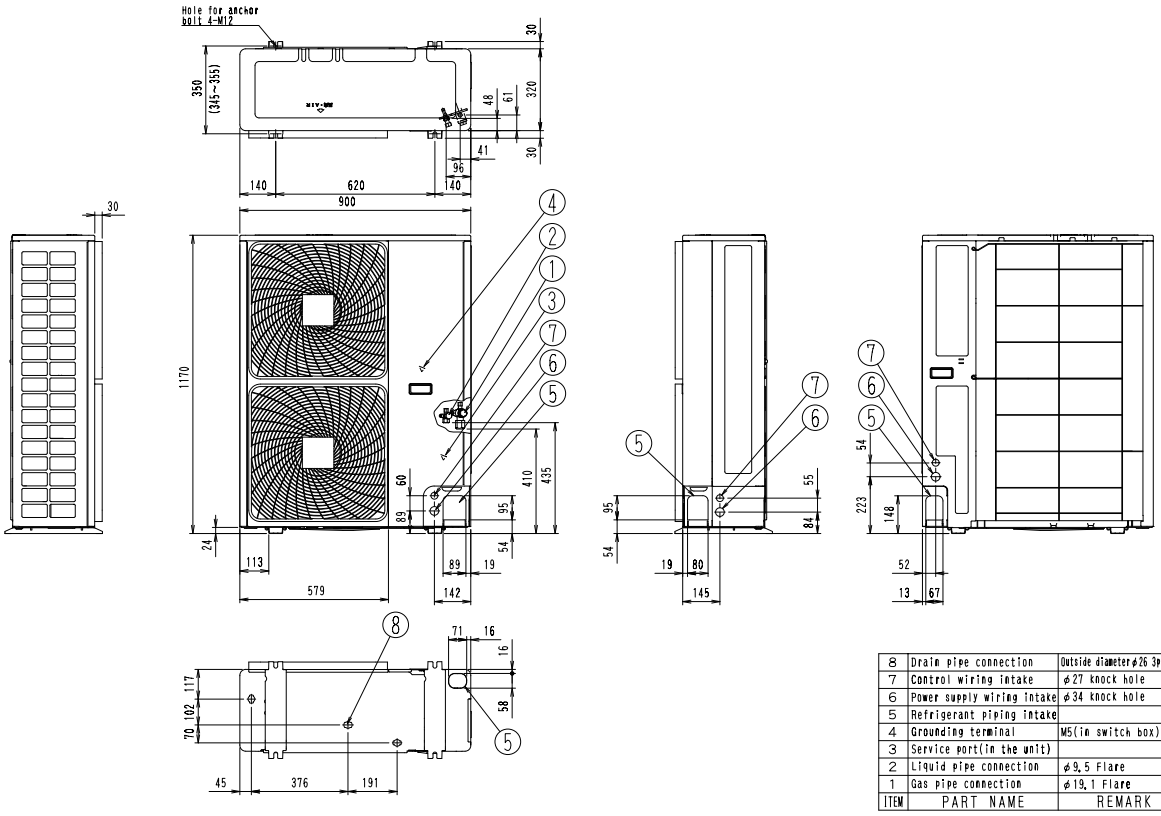


| ITEM | PART NAME | REMARK |
|---|---|---|
| 8 | Drain pipe connection | Outside diameter φ26 3points |
| 7 | Control wiring intake | φ27 knock hole |
| 6 | Power supply wiring intake | φ34 knock hole |
| 5 | Refrigerant piping intake | |
| 4 | Grounding terminal | M5(in switch box) |
| 3 | Service port(in the unit) | |
| 2 | Liquid pipe connection | φ9,5 Flare |
| 1 | Gas pipe connection | φ19,1 Flare |

3D052426

## R48NUY1 / R51NUY1

Unit (mm)

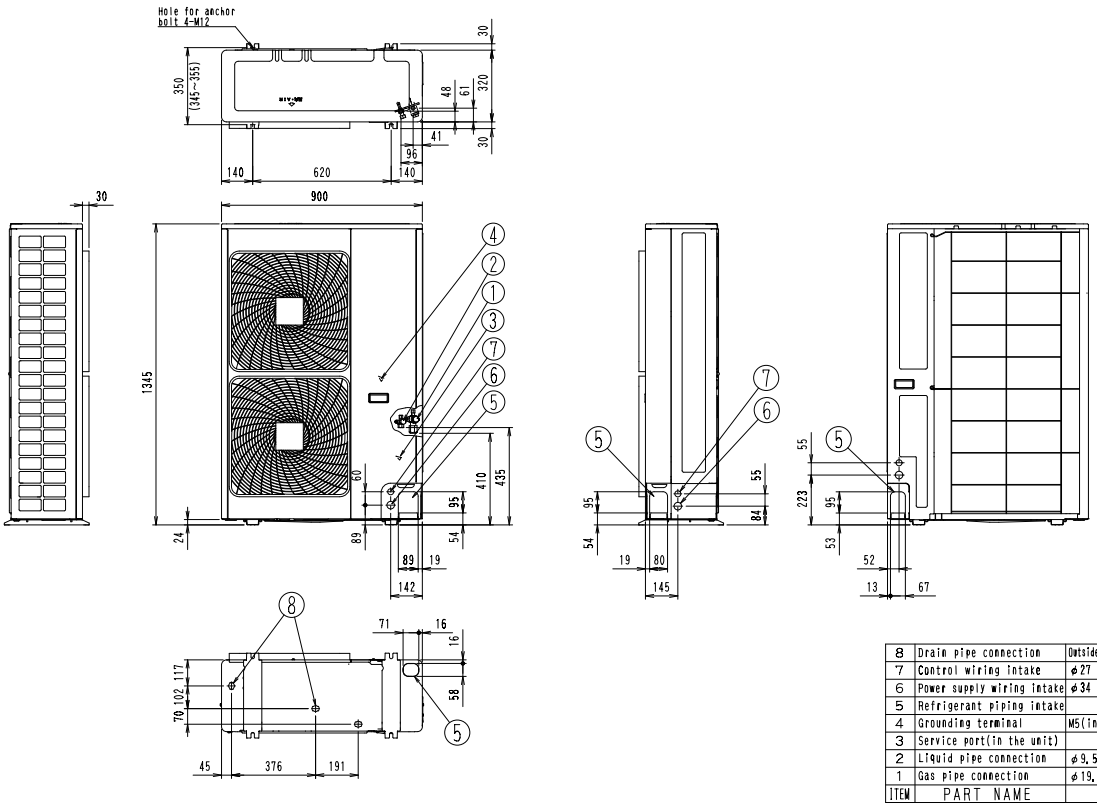


| ITEM | PART NAME | REMARK |
|---|---|---|
| 8 | Drain pipe connection | Outside diameter φ26 3points |
| 7 | Control wiring intake | φ27 knock hole |
| 6 | Power supply wiring intake | φ34 knock hole |
| 5 | Refrigerant piping intake | |
| 4 | Grounding terminal | M5(in switch box) |
| 3 | Service port(in the unit) | |
| 2 | Liquid pipe connection | φ9,5 Flare |
| 1 | Gas pipe connection | φ19,1 Flare |

3D052427

## R56NUY1

Unit (mm)

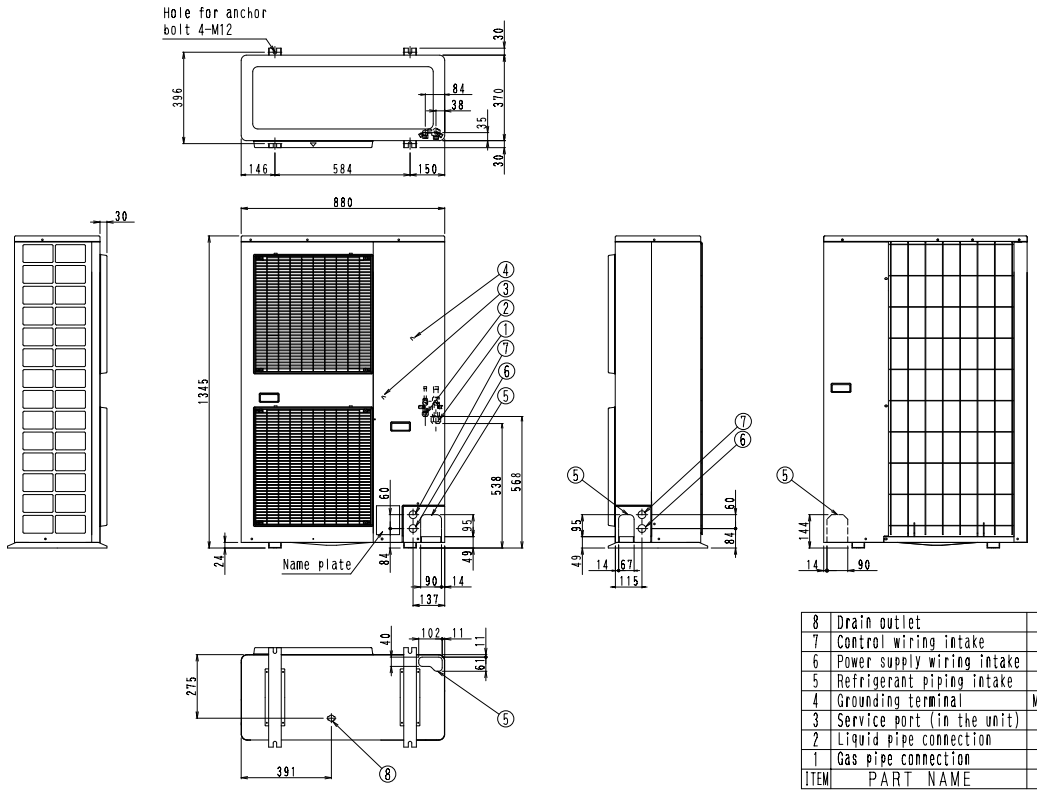


| ITEM | PART NAME | REMARK |
|---|---|---|
| 8 | Drain outlet | φ 26 |
| 7 | Control wiring intake | φ34 knock hole |
| 6 | Power supply wiring intake | φ34 knock hole |
| 5 | Refrigerant piping intake | |
| 4 | Grounding terminal | M5 (in switch box) |
| 3 | Service port (in the unit) | |
| 2 | Liquid pipe connection | φ9.5 Flare |
| 1 | Gas pipe connection | φ19.1 Flare |

C : 3D052527

## 5.5 Installation service space



**R26NUV1 / R26NUY1 / R30NUV1 / R30NUY1 / R36NUV1 / R36NUY1 / R42NUY1 / R48NUY1 / R51NUY1 / R56NUY1**

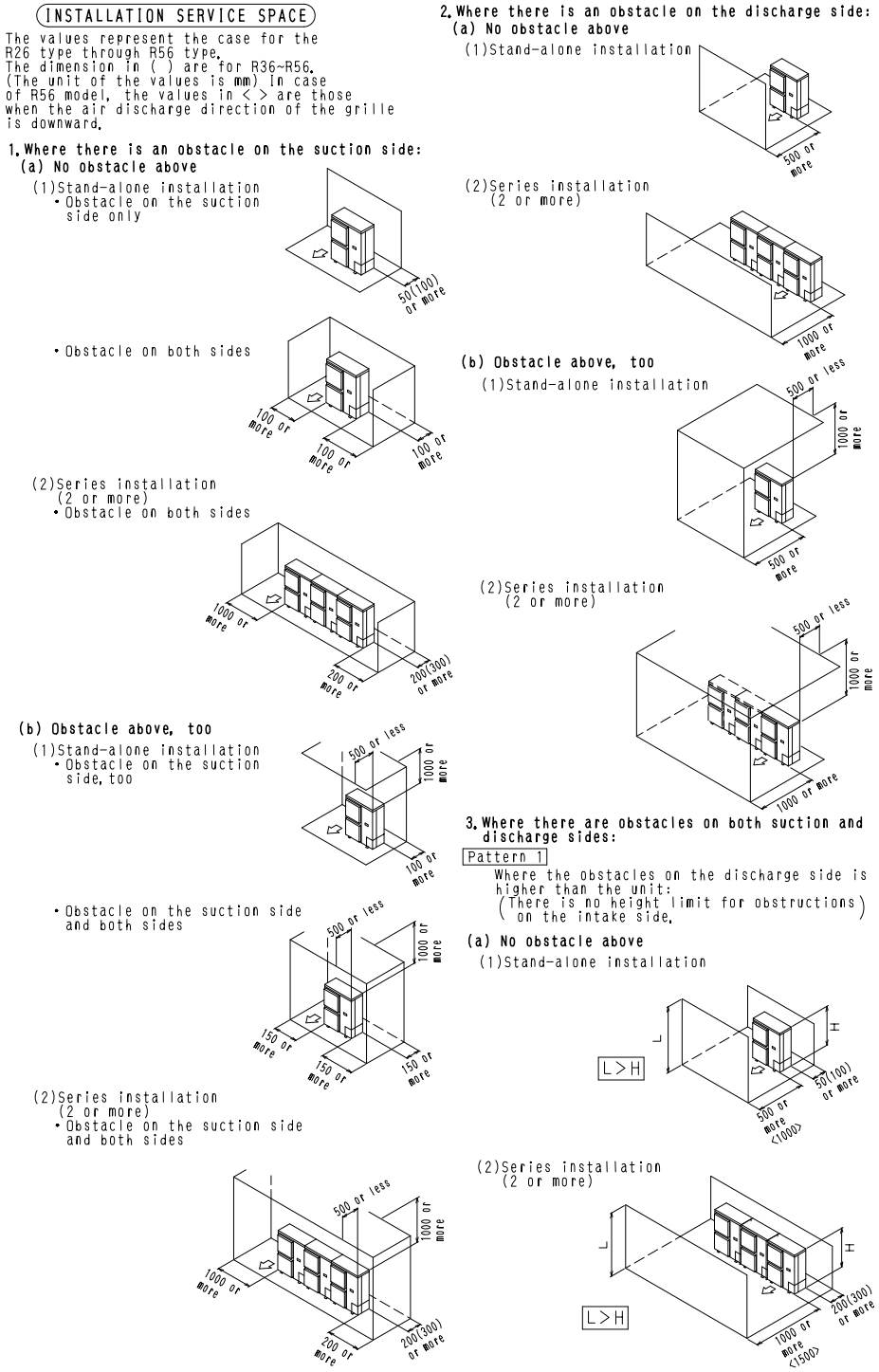


3D052620C

**(b) Obstacle above, too**

(1)Stand-alone installation

The relations between H, A and L are as follows:

| | L | A |
|---|---|---|
| L≦H | 0<L≦1/2H | 750<1250> |
| | 1/2H<L≦H | 1000<1500> |
| L>H | Set the stand as: L≦H. | |

Close the bottom of the installation frame to prevent the discharged air from being bypassed.

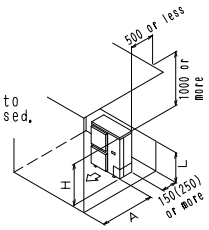


(2)Series installation
(2 or more)

The relations between H, A and L are as follows:

| | L | A |
|---|---|---|
| L≦H | 0<L≦1/2H | 1000<1500> |
| | 1/2H<L≦H | 1250<1750> |
| L>H | Set the stand as: L≦H. | |

Close the bottom of the installation frame to prevent the discharged air from being bypassed.

Only two units can be installed for this series.

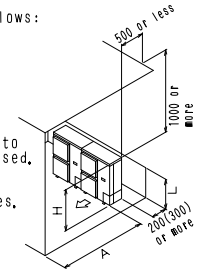


Pattern 2

Where the obstacles on the discharge side is lower than the unit:

(There is no height limit for obstructions on the intake side.)

**(a) No obstacle above**

(1)Stand-alone installation

L≦H

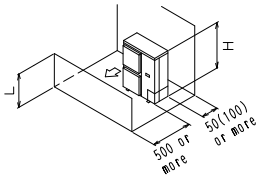


(2)Series installation
(2 or more)

The relations between H, A and L are as follows:

| L | A |
|---|---|
| 0<L≦1/2H | 150(250)<250> |
| 1/2H<L≦H | 200(300)<300> |

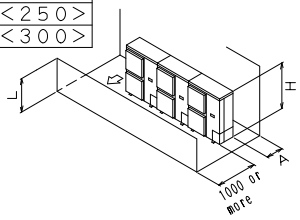


**(b) Obstacle above, too**

(1)Stand-alone installation

The relations between H, A and L are follows:

| | L | A |
|---|---|---|
| L≦H | 0<L≦1/2H | 50(100)<250> |
| | 1/2H<L≦H | 100(200)<300> |
| L>H | Set the stand as: L≦H. | |

Close the bottom of the installation frame to prevent the discharged air from being bypassed.

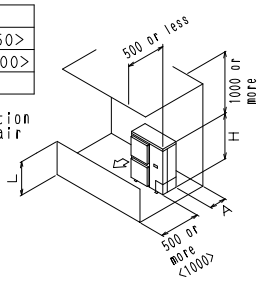


(2)Series installation

The relations between H, A and L are as follows:

| | L | A |
|---|---|---|
| L≦H | 0<L≦1/2H | 150(250)<250> |
| | 1/2H<L≦H | 200(300)<300> |
| L>H | Set the stand as: L≦H. | |

Close the bottom of the installation frame to prevent the discharged air from being bypassed.

Only two units can be installed for this series.

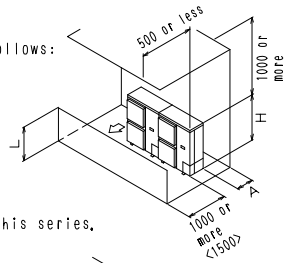


**4. Double-decker installation**

(a) Obstacle on the discharge side
Close the gap A (the gap between the upper and lower outdoor units) to prevent the discharged air from being bypassed.

Do not stack more than two unit.

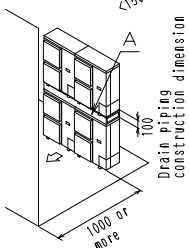


(b) Obstacle on the suction side
Close the gap A (the gap between the upper and lower outdoor units) to prevent the discharged air from being bypassed.

Do not stack more than two unit.

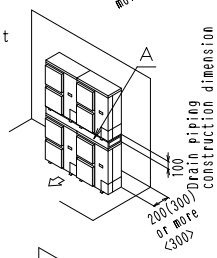


**5. Multiple rows of series installation (on the rooftop, etc.)**

(a) One row of stand-alone installation

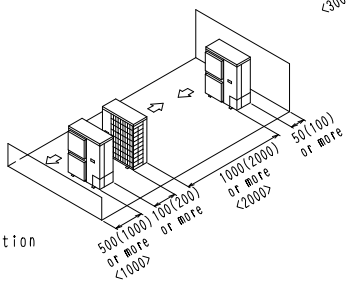


(b) Rows of series installation
(2 or more)

The relations between H, A and L are as follows:

| | L | A |
|---|---|---|
| L≦H | 0<L≦1/2H | 150(250) |
| | 1/2H<L≦H | 200(300) |
| L>H | Cannot be installed. | |

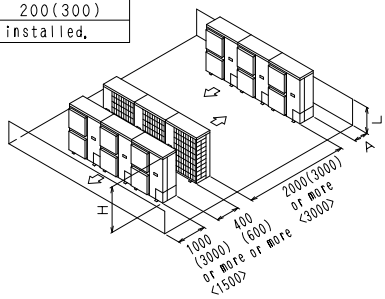


3D052620C

# 6. Piping diagrams



**R18NUV1 / R21NUV1**

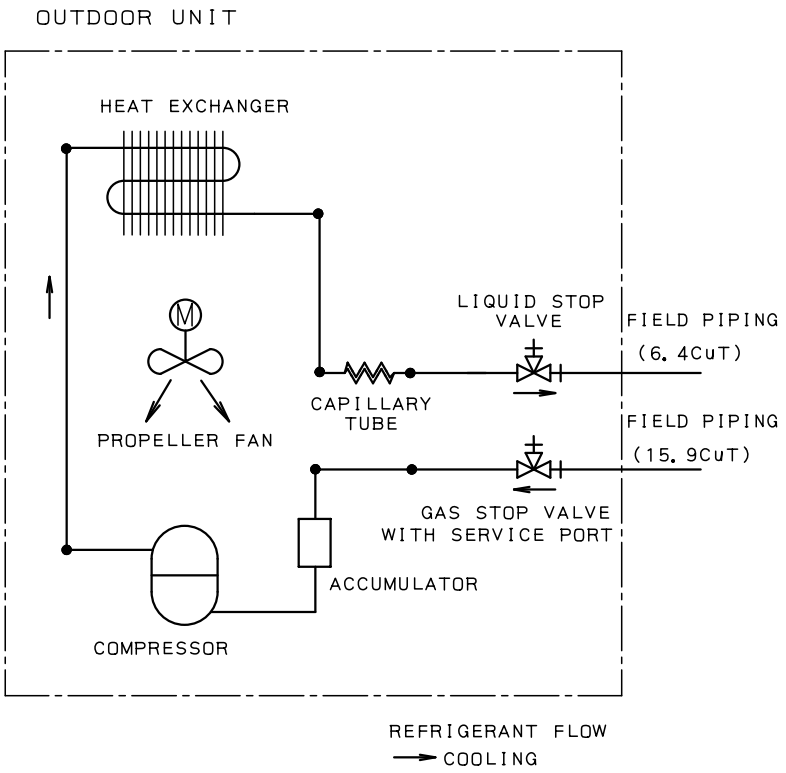


**R26NUV1 / R26NUY1 / R30NUV1 / R30NUY1**

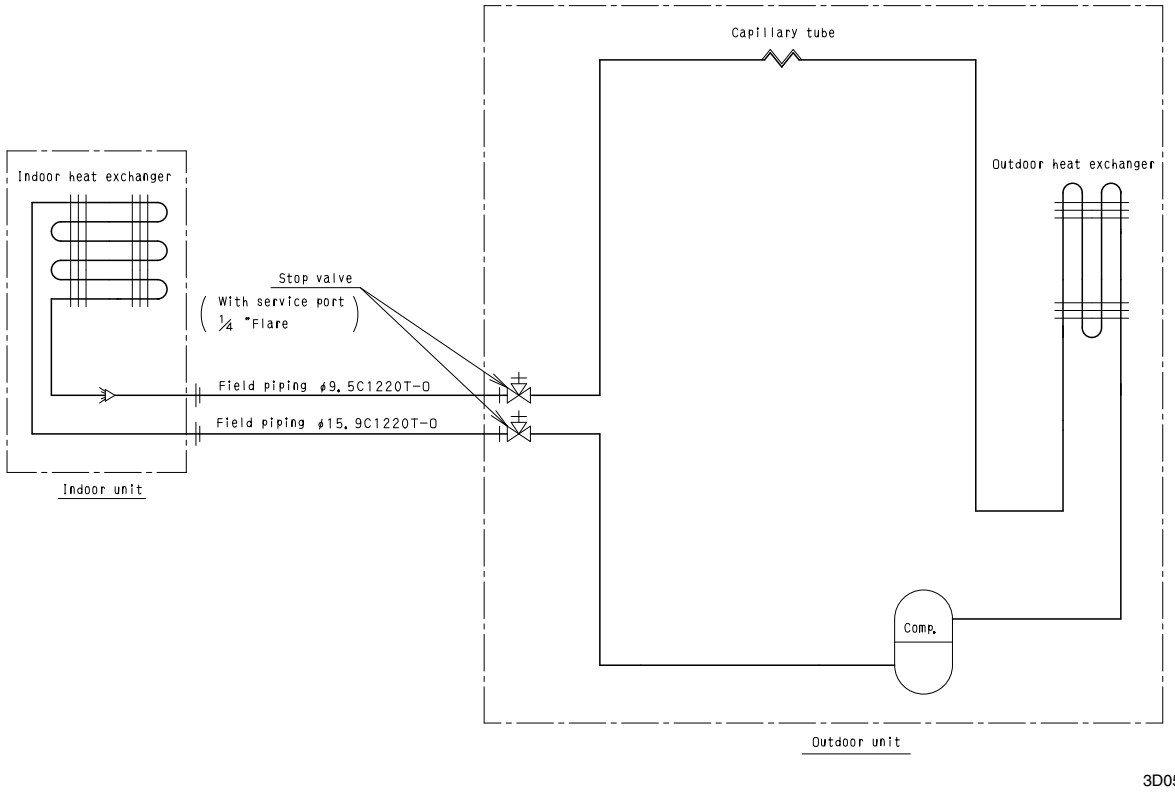

**R36NUV1 / R36NUY1 / R42NUY1 / R48NUY1 / R51NUY1 / R56NUY1**

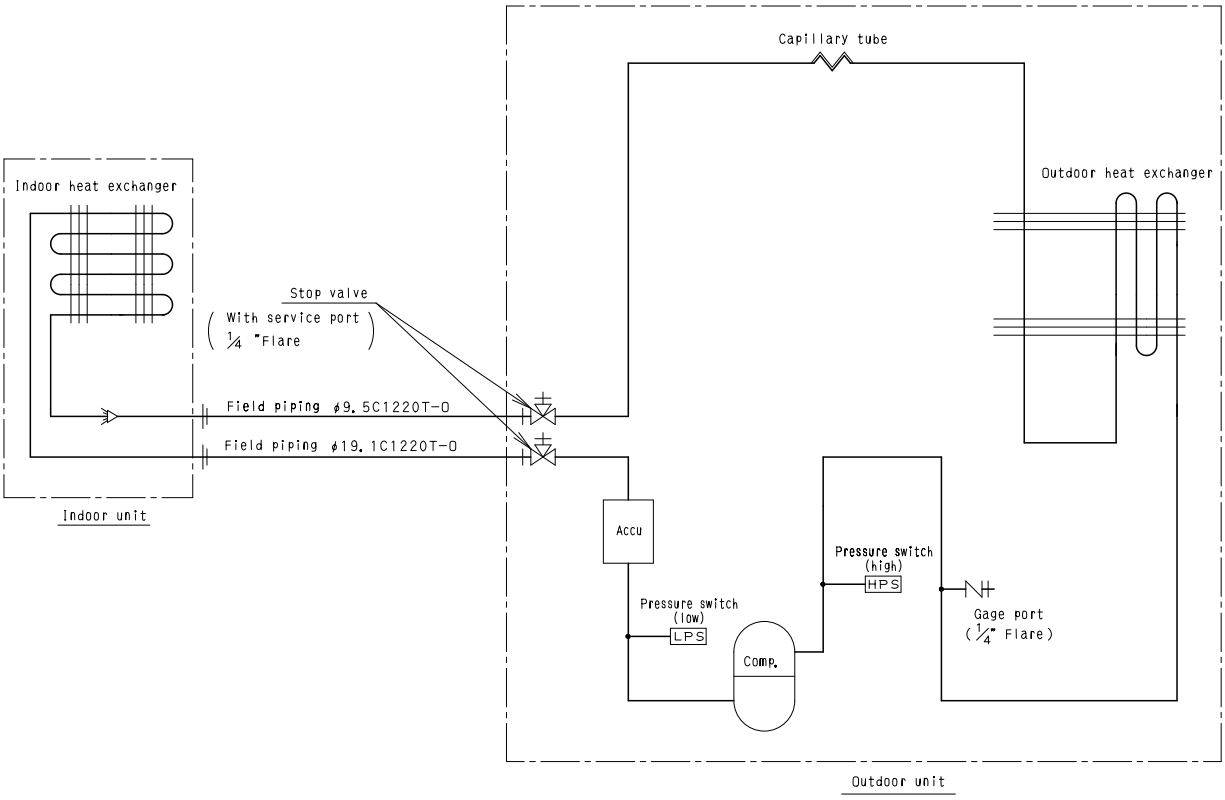


3D052278

# 7. Wiring diagrams

## 7.1 Indoor unit

**FHC18NUV1 / FHC21NUV1 / FHC26NUV1 / FHC30NUV1 / FHC36NUV1 / FHC42NUV1 / FHC48NUV1**

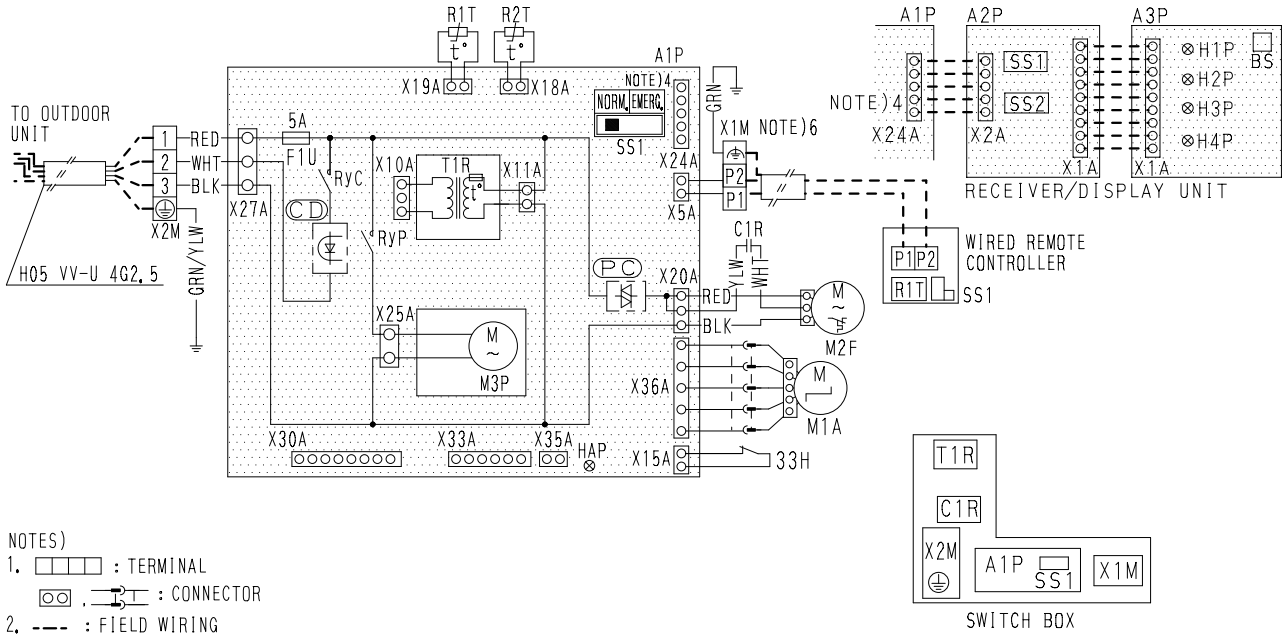


NOTES)
1. ☐☐☐☐ : TERMINAL
   ⊡ , ⊡ : CONNECTOR
2. ---- : FIELD WIRING
3. IN CASE USING CENTRAL REMOTE CONTROLLER, CONNECT IT TO THE UNIT IN ACCORDANCE WITH THE ATTACHED INSTRUCTION MANUAL.
4. X24A IS CONNECTED WHEN THE WIRELESS REMOTE CONTROLLER KIT IS BEING USED.
5. REMOTE CONTROLLER MODEL VARIES ACCORDING TO THE COMBINATION SYSTEM, CONFIRM TECHNICAL MATERIALS AND CATALOGS, ETC. BEFORE CONNECTING.
6. GROUND THE SHIELD OF THE REMOTE CONTROLLER CORD TO THE INDOOR UNIT(IN CASE OF USING SHIELD WIRE)
7. SYMBOLS SHOWS AS FOLLOWS
   RED:RED BLK:BLACK WHT:WHITE YLW:YELLOW GRN:GREEN

| 1 —RED | 2 —WHITE | 3 —BLACK | |
|---|---|---|---|
| 33H | FLOAT SWITCH | RECEIVER/DISPLAY UNIT(ATTACHED TO WIRLESS REMOTE CONTROLLER) | |
| A1P | PRINTED CIRCUIT BOARD | | |
| T1R | TRANSFORMER(220-240V/22V) | A2P | PRINTED CIRCUIT BOARD |
| C1R | CAPACITOR(M2F) | A3P | PRINTED CIRCUIT BOARD |
| F1U | FUSE(250V, 5A) | BS | PUSH BUTTON(ON/OFF) |
| HAP | LIGHT EMITTING DIODE (SERVICE MONITOR GREEN) | H1P | LIGHT EMITTING DIODE (SERVICE MONITOR-RED) |
| M1A | MOTOR(SWING FLAP) | H2P | LIGHT EMITTING DIODE (SERVICE MONITOR-GREEN) |
| M2F | MOTOR(INDOOR FAN) | | |
| M3P | MOTOR(DRAIN PUMP) | H3P | LIGHT EMITTING DIODE (SERVICE MONITOR-RED) |
| Q1F | THERMO SWITCH(M2F EMBEDDED) | | |
| R1T | THERMISTOR(AIR) | H4P | LIGHT EMITTING DIODE (SERVICE MONITOR-ORANGE) |
| R2T | THERMISTOR(COIL) | | |
| RyP | MAGNETIC RELAY(M3P) | SS1 | SELECTOR SWITCH(MAIN/SUB) |
| RyC | MAGNETIC RELAY(OUTDOOR UNIT COMPRESSOR) | SS2 | SELECTOR SWITCH (WIRELESS ADDRESS SET) |
| SS1 | SELECTOR SWITCH (EMERGENCY) | CONNECTOR FOR OPTIONAL PARTS | |
| X1M | TERMINAL STRIP | X30A | CONNECTOR (INTERFACE ADAPTOR FOR SKY AIR SERIES) |
| X2M | TERMINAL STRIP | | |
| CD | CURRENT DETECT CIRCUIT | X33A | CONNECTOR (ADAPTOR FOR WIRING) |
| PC | PHASE CONTROL CIRCUIT | X35A | CONNECTOR (GROUP CONTROL ADAPTOR) |
| WIRED REMOTE CONTROLLER | | | |
| R1T | THERMISTOR(AIR) | | |
| SS1 | SELECTOR SWITCH(MAIN/SUB) | | |

3D052066B

## FH21NUV1 / FH26NUV1 / FH30NUV1 / FH36NUV1 / FH42NUV1 / FH48NUV1

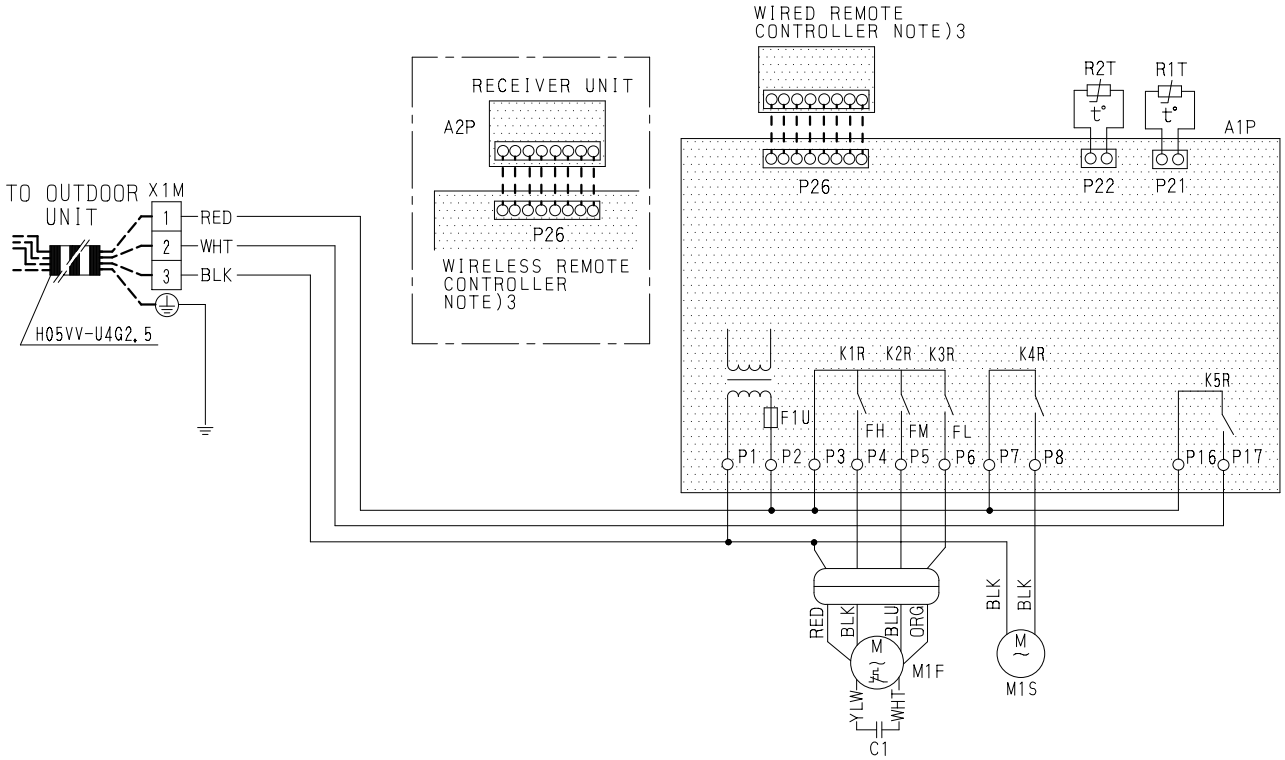


NOTES)
1. ▭▭▭ : TERMINAL
   ▭▭, ⊸▭⊸ : CONNECTOR
   ⊸○⊸ : TAB
2. ---- : FIELD WIRING
3. REMOTE CONTROLLER MODEL VARIES ACCORDING TO THE COMBINATION SYSTEM, CONFIRM ENGINEERING MATERIALS AND CATALOGS, ETC. BEFORE CONNECTING.
4. SYMBOLS SHOW AS FOLLOWS: BLK:BLACK BLU:BLUE ORG:ORANGE RED:RED WHT:WHITE YLW:YELLOW

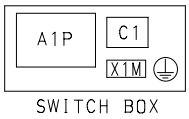


| 1-RED | 2-WHITE | 3-BLACK |
|---|---|---|
| A1P | PRINTED CIRCUIT BOARD | |
| C1 | CAPACITOR(M1F) | |
| F1U | FUSE(250V, 3.15A) | |
| K1R | MAGNETIC RELAY(M1F) | |
| K2R | MAGNETIC RELAY(M1F) | |
| K3R | MAGNETIC RELAY(M1F) | |
| K4R | MAGNETIC RELAY(M1S) | |
| K5R | MAGNETIC RELAY (OUTDOOR UNIT COMPRESSOR) | |
| M1F | MOTOR(INDOOR FAN) | |
| M1S | MOTOR(SWING FLAP) | |
| Q1F | THERMO SWITCH(M1F EMBEDDED) | |
| R1T | THERMISTOR(AIR) | |
| R2T | THERMISTOR(COIL) | |
| X1M | TERMINAL STRIP | |
| WIRELESS REMOTE CONTROLLER (RECEIVER/DISPLAY UNIT) | | |
| A2P | PRINTED CIRCUIT BOARD | |

3D052046B

1

## FDBG18NUV1 / FDBG21NUV1 / FDBG26NUV1

NOTES)
1. : TERMINAL STRIP
2. : FIELD WIRING
3. REMOTE CONTROLLER MODEL VARIES ACCORDING TO THE COMBINATION SYSTEM. CONFIRM ENGINEERING DATA AND CATALOGS, ETC. BEFORE CONNECTING.
4. SYMBOLS SHOW AS FOLLOWS:
RED:RED BLK:BLACK WHT:WHITE
YLW:YELLOW BLU:BLUE ORG:ORANGE
5. WHEN SELECTING FOR HIGH ESP, CONNECT THE WIRES AS SHOWN BELOW.

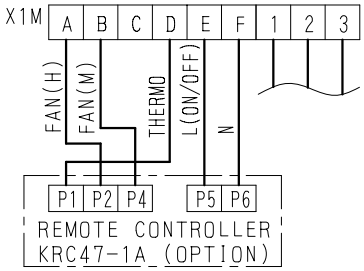


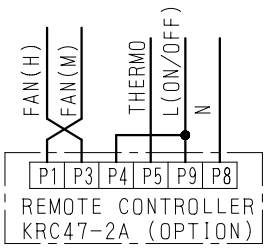


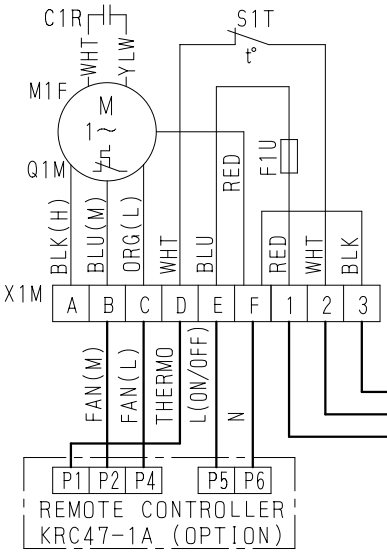


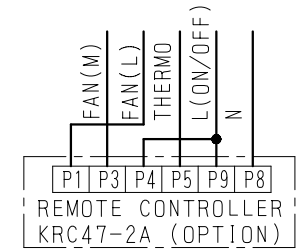


| | |
|---|---|
| C1R | CAPACITOR(M1F) |
| F1U | FUSE(5A, 250V) |
| M1F | MOTOR(INDOOR UNIT) |
| S1T | THERMO SWITCH(FREEZE) |
| X1M | TERMINAL STRIP |
| Q1M | THERMAL PROTECTOR |

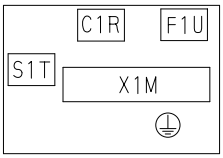


SWITCH BOX

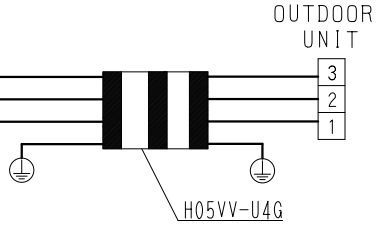


3D052109C

**FDMG26NUV1 / FDMG30NUV1 / FDMG36NUV1 / FDMG42NUV1 / FDMG48NUV1 / FDMG51NUV1 / FDMG56NUV1**

NOTES)
1. : TERMINAL STRIP
2. : FIELD WIRING
3. REMOTE CONTROLLER MODEL VARIES ACCORDING TO THE COMBINATION SYSTEM. CONFIRM ENGINEERING DATA AND CATALOGS, ETC. BEFORE CONNECTING.
4. SYMBOLS SHOW AS FOLLOWS:
   RED:RED BLK:BLACK WHT:WHITE
   YLW:YELLOW BLU:BLUE ORG:ORANGE
5. WHEN SELECTING FOR HIGH ESP, CONNECT THE WIRES AS SHOWN BELOW.

| | |
|---|---|
| C1R | CAPACITOR(M1F) |
| F1U | FUSE(5A, 250V) |
| M1F | MOTOR(INDOOR UNIT) |
| S1T | THERMO SWITCH(FREEZE) |
| X1M | TERMINAL STRIP |
| Q1M | THERMAL PROTECTOR |

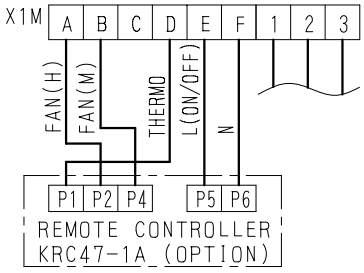


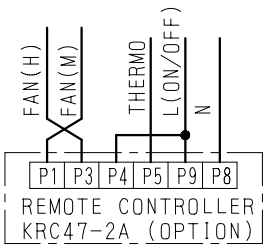


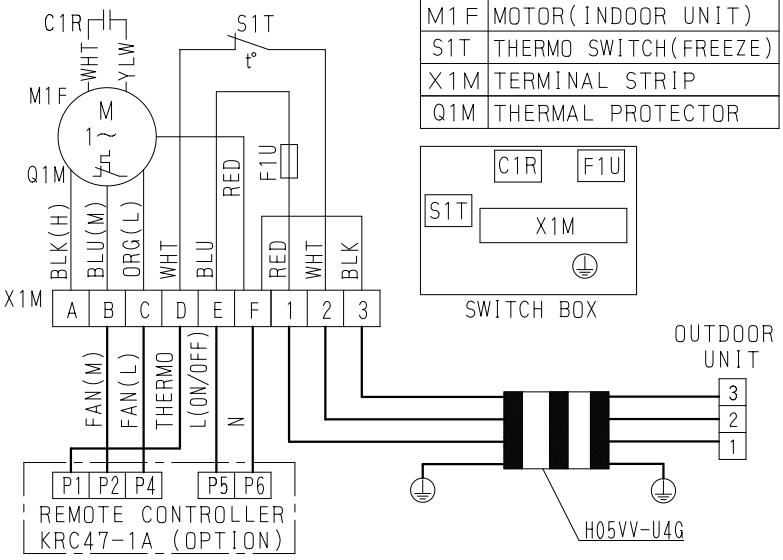


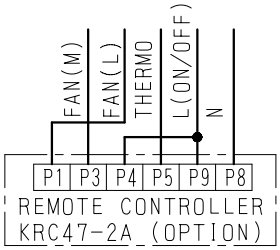


3D052109C

## 7.2 Remote controller

**KRC47-1A**

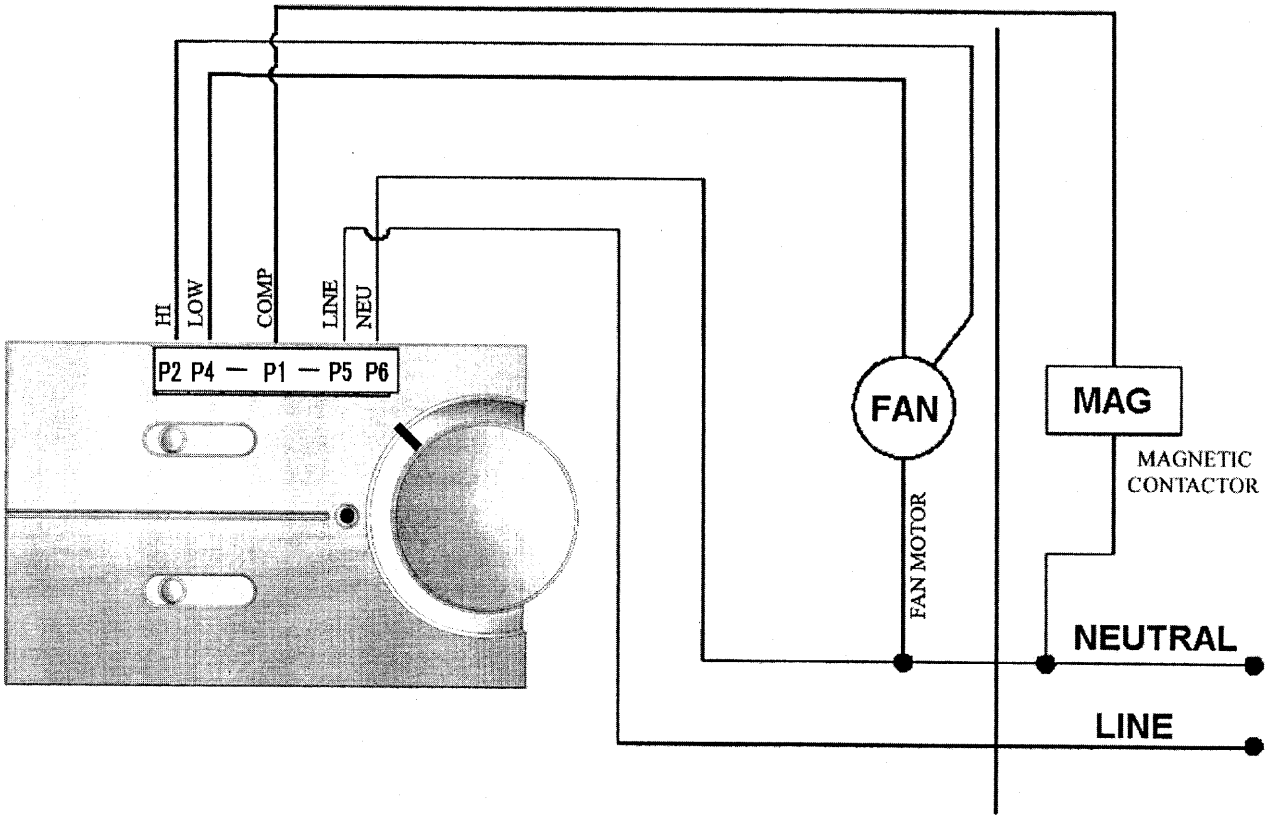


AS1603348

**KRC47-2A / KRC47-4A**

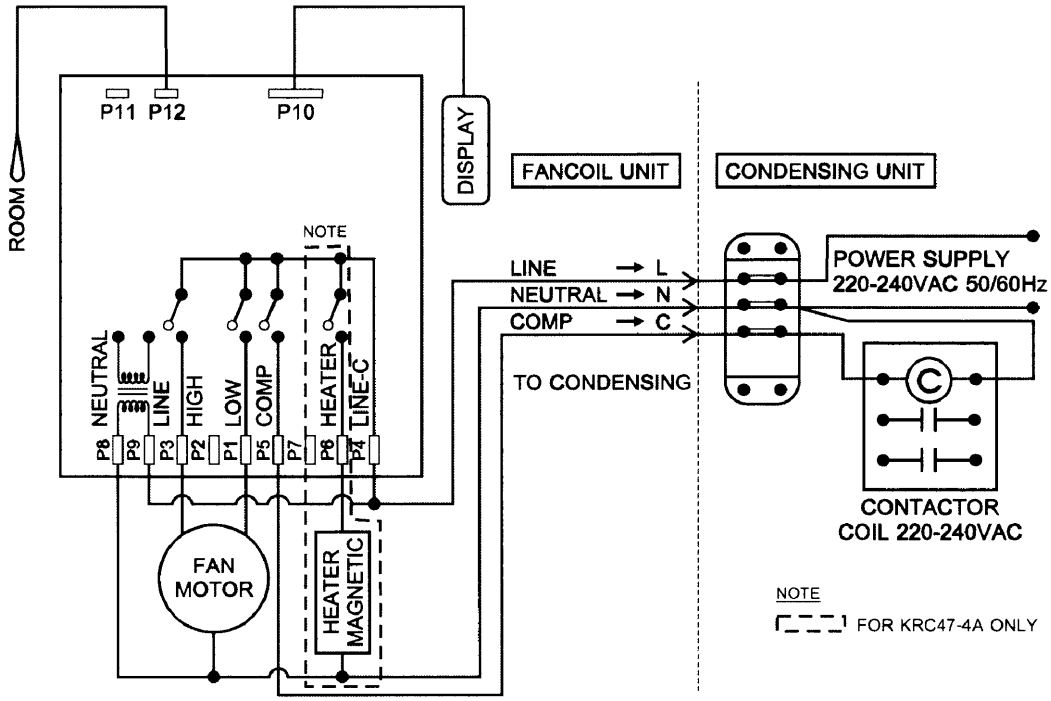


3D058155

## 7.3 Outdoor unit

**R18NUV1**

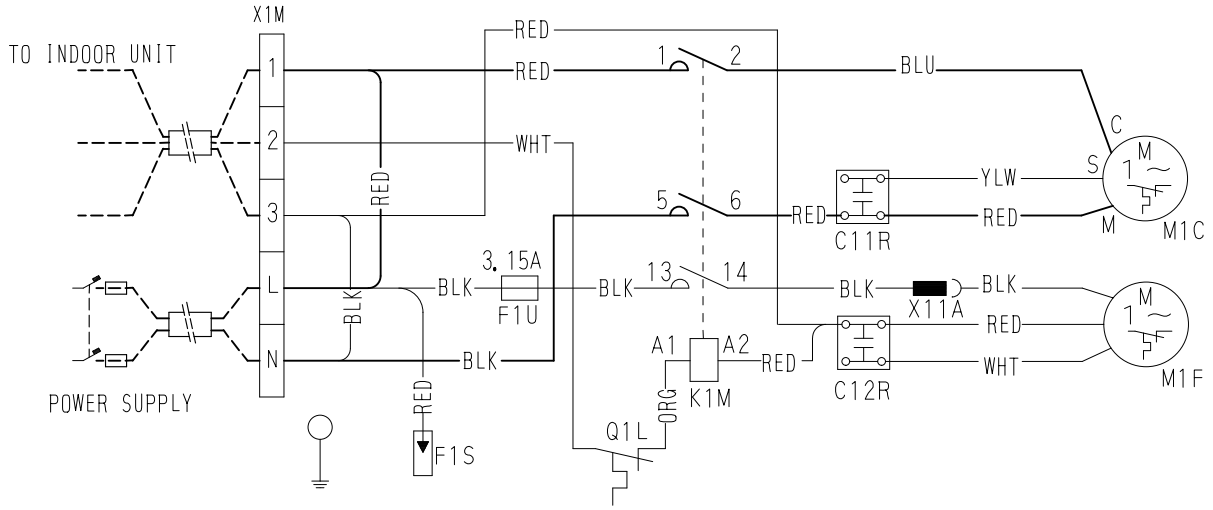


C11R , C12R:RUNNING CAPACITOR
F1U:FUSE
F1S:SURGE ARRESTER
K1M:COMPRESSOR RELAY
L: LIVE
M1C:COMPRESSOR MOTOR

M1F:FAN MOTOR
N: NEUTRAL
Q1L:OVERLOAD PROTECTOR
X11A:CONNECTOR
X1M:TERMINAL STRIP

NOTES
1. REFER TO THE NAMEPLATE FOR THE POWER REQUIREMENTS.

3D032199B

**R21NUV1**

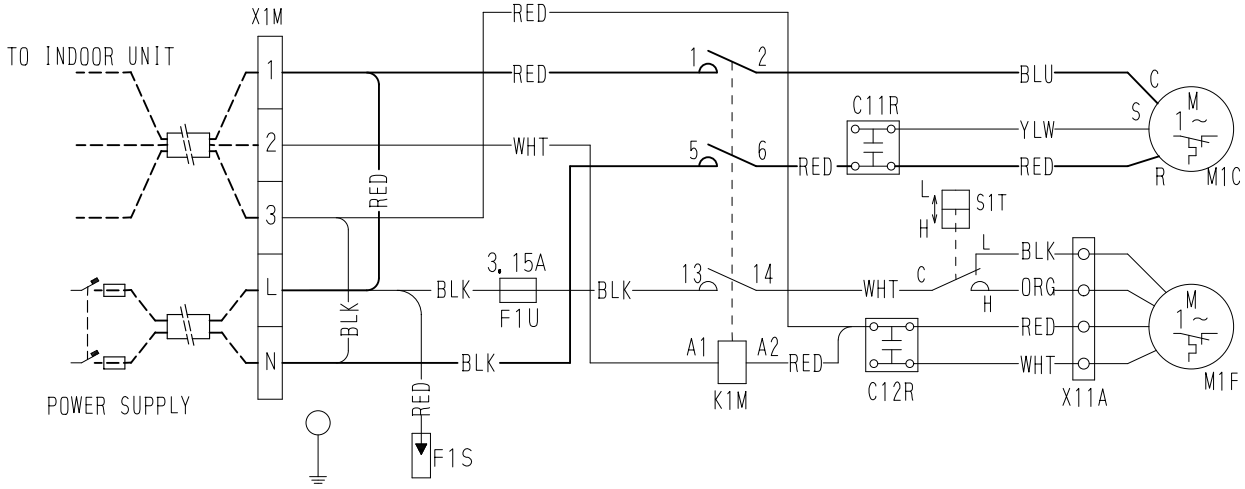


C11R , C12R:RUNNING CAPACITOR
F1S:SURGE ARRESTER
F1U:FUSE
K1M:COMPRESSOR RELAY
L: LIVE
M1C:COMPRESSOR MOTOR

M1F:FAN MOTOR
N: NEUTRAL
S1T:THERMOSTAT
X11A:CONNECTOR
X1M:TERMINAL STRIP

NOTES
1. REFER TO THE NAMEPLATE FOR THE POWER REQUIREMENTS.

3D032200A

1

## R26NUV1 / R30NUV1

| L-RED | N-BLU |
|---|---|
| C1 | CAPACITOR (M1F) |
| C2 | CAPACITOR (M1C) |
| F1U | FUSE (250V, 5A) |
| F1S | LIGHTNING ARRESTOR |
| K1M | MAGNETIC CONTACTOR |
| M1C | MOTOR (COMPRESSOR) |
| M1F | MOTOR (FAN) |
| Q1M | THERMO SWITCH (M1F) |
| X1M | TERMINAL STRIP |
| X2M | TERMINAL STRIP |

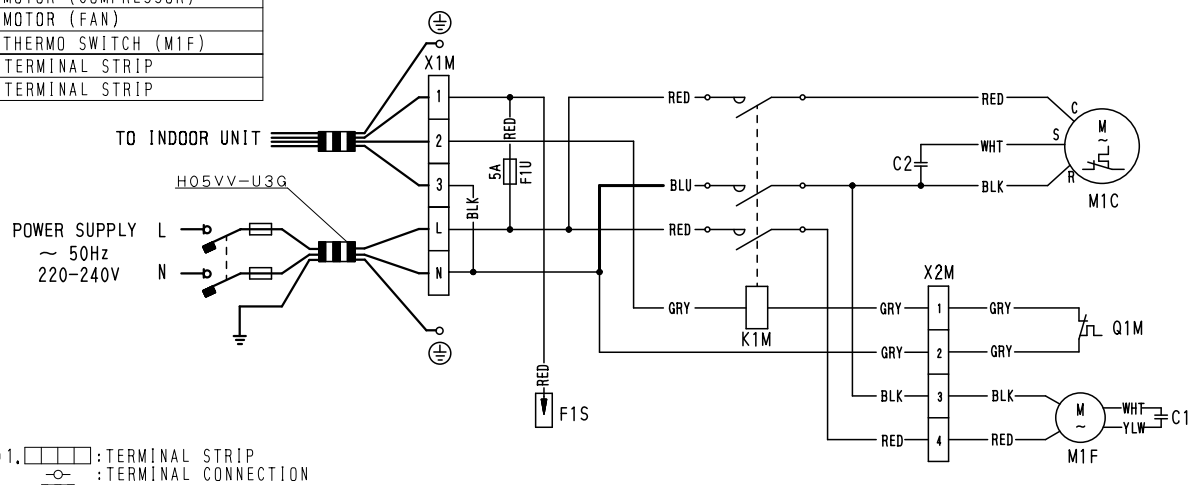


NOTES) 1. □□□□ :TERMINAL STRIP
-o- :TERMINAL CONNECTION
2. ▮▮▮ :FIELD WIRING
3. SYMBOLS SHOW AS FOLLOWS
BLK:BLACK RED:RED YLW:YELLOW
BLU:BLUE WHT:WHITE GRY:GRAY
4. MAKE SURE TO CONNECT WIRE HARNESS
&POWER SUPPLY CORDS FOLLOW WIRING DIAGRAM

3D053671C

## R26NUY1 / R30NUY1

| L1-RED | L2-WHT | L3-BLK | N-BLU |
|---|---|---|---|
| C1 | CAPACITOR (M1F) | | |
| F1U | FUSE (250V, 5A) | | |
| K1M | MAGNETIC CONTACTOR | | |
| M1C | MOTOR (COMPRESSOR) | | |
| M1F | MOTOR (FAN) | | |
| Q1RP | REVERSE PHASE PROTECTOR | | |
| Q1M | THERMO SWITCH (M1F) | | |
| X1M | TERMINAL STRIP | | |
| X2M | TERMINAL STRIP | | |

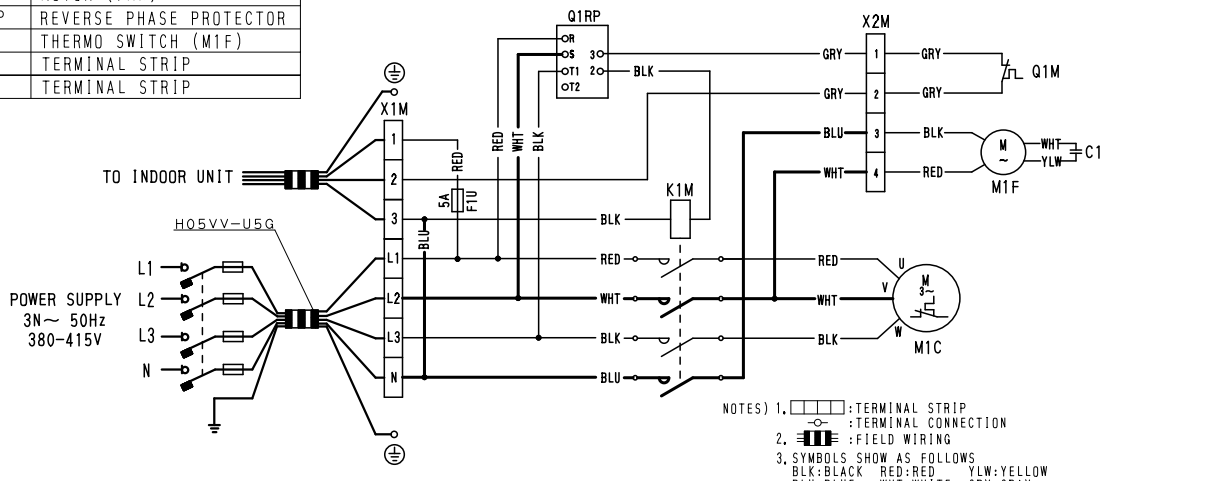


NOTES) 1. □□□□ :TERMINAL STRIP
-o- :TERMINAL CONNECTION
2. ▮▮▮ :FIELD WIRING
3. SYMBOLS SHOW AS FOLLOWS
BLK:BLACK RED:RED YLW:YELLOW
BLU:BLUE WHT:WHITE GRY:GRAY
4. CHANGE THE CONNECTION OF TERMINAL STRIP AND PHASE REVERSAL PROTECTOR ACCORDING TO THE TABLE 1.

TABLE 1 ✱FACTORY CONNECTION

| VOLTAGE | TERMINAL |
|---|---|
| 380V | ✱R-S-T1 |
| 400・415V | R-S-T2 |

5. MAKE SURE TO CONNECT WIRE HARNESS & POWER SUPPLY CORD FOLLOW WIRING DIAGRAM.

3D053670D

## R36NUV1

| | |
|---|---|
| L-RED | N-BLU |
| C1 | CAPACITOR (M1F) |
| C3 | CAPACITOR (M1C) |
| F1U | FUSE (250V 5A) |
| K1M | MAGNETIC CONTACTOR(M1C) |
| K1R・K2R | MAGNETIC RELAY(ALARM) |
| M1C | MOTOR (COMPRESSOR) |
| M1F | MOTOR (FAN) |
| Q1M | THERMO SWITCH (M1F) |
| Q1 | THERMO SWITCH (DISCHARGE PIPE) |
| S1PH | PRESSURE SWITCH (HIGH) |
| S1PL | PRESSURE SWITCH (LOW) |
| X1M・X2M | TERMINAL STRIP(OUTDOOR UNIT) |

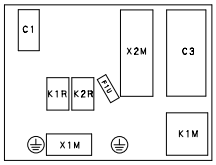


SWITCH BOX

1. :TERMINAL STRIP
   :TERMINAL CONNECTION
2. :FIELD WIRING
3. SYMBOLS SHOW AS FOLLOWS
   BLK:BLACK RED:RED ORA:ORANGE PNK:PINK
   BLU:BLUE WHT:WHITE YLW:YELLOW GRY:GRAY

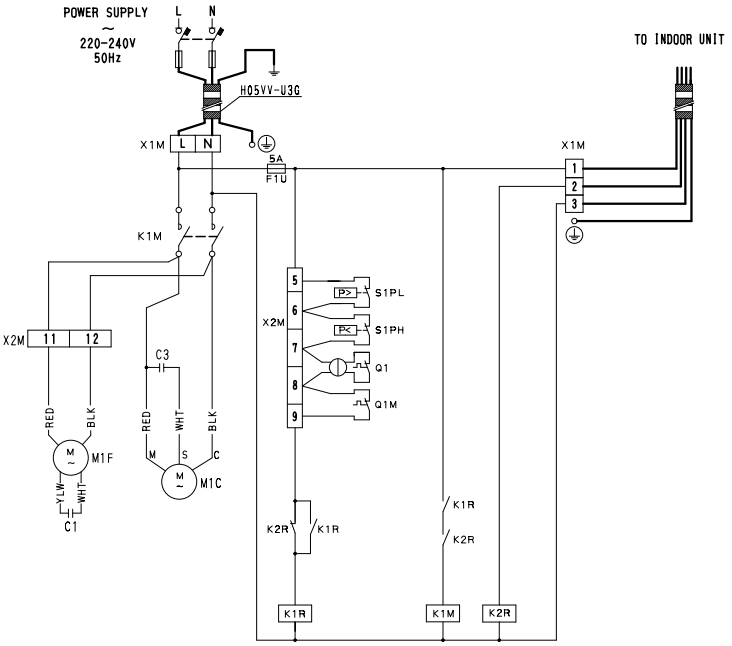


3D051564A

## R36NUY1

| | | | |
|---|---|---|---|
| L1-RED | L2-WHT | L3-BLK | N-BLU |
| C1 | CAPACITOR (M1F) | | |
| F1U | FUSE (250V 5A) | | |
| K1M | MAGNETIC CONTACTOR(M1C) | | |
| K1R・K2R | MAGNETIC RELAY(ALARM) | | |
| M1C | MOTOR (COMPRESSOR) | | |
| M1F | MOTOR (FAN) | | |
| Q1M | THERMO SWITCH (M1F) | | |
| Q1RP | REVERSE PHASE PROTECTOR | | |
| Q1 | THERMO SWITCH (DISCHARGE PIPE) | | |
| S1PH | PRESSURE SWITCH (HIGH) | | |
| S1PL | PRESSURE SWITCH (LOW) | | |
| X1M・X2M | TERMINAL STRIP(OUTDOOR UNIT) | | |

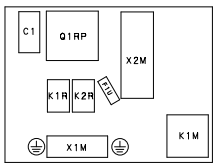


SWITCH BOX

1. :TERMINAL STRIP
   :TERMINAL CONNECTION
2. :FIELD WIRING
3. SYMBOLS SHOW AS FOLLOWS
   BLK:BLACK RED:RED ORA:ORANGE PNK:PINK
   BLU:BLUE WHT:WHITE YLW:YELLOW GRY:GRAY
4. CHANGE THE CONNECTION OF TERMINAL STRIP AND PHASE REVERSAL PROTECTOR ACCORDING TO THE TABLE 1.

TABLE 1 ✱FACTORY CONNECTION

| VOLTAGE | TERMINAL |
|---|---|
| 380V | ✱R-S-T1 |
| 400・415V | R-S-T2 |

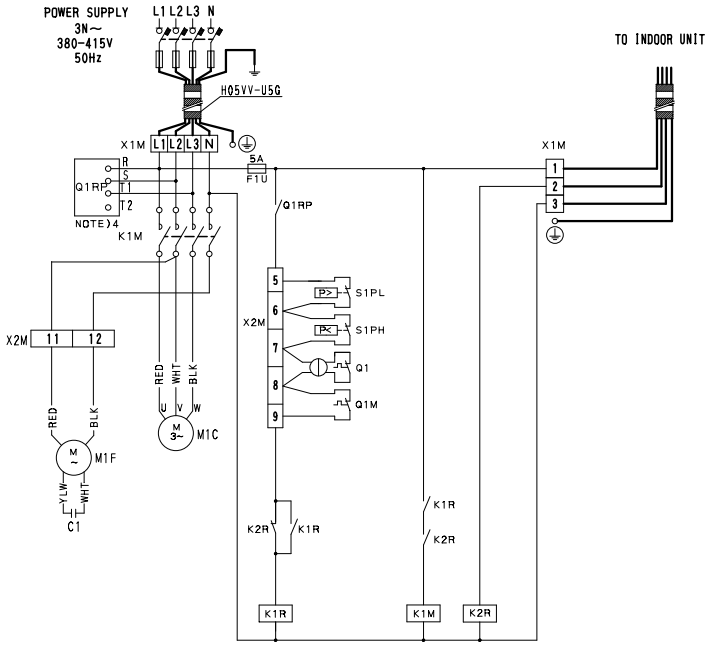


3D051536A

1

## R42NUY1 / R48NUY1 / R51NUY1

| | | | |
|---|---|---|---|
| L1-RED | L2-WHT | L3-BLK | N-BLU |
| C1・C2 | CAPACITOR (M1F・M2F) | | |
| F1U | FUSE (250V 5A) | | |
| K1M | MAGNETIC CONTACTOR(M1C) | | |
| K1R・K2R | MAGNETIC RELAY(ALARM) | | |
| M1C | MOTOR (COMPRESSOR) | | |
| M1F・M2F | MOTOR (FAN) | | |
| Q1M・Q2M | THERMO SWITCH (M1F・M2F) | | |
| Q1RP | REVERSE PHASE PROTECTOR | | |
| Q1 | THERMO SWITCH (DISCHARGE PIPE) | | |
| S1PH | PRESSURE SWITCH (HIGH) | | |
| S1PL | PRESSURE SWITCH (LOW) | | |
| X1M・X2M | TERMINAL STRIP(OUTDOOR UNIT) | | |

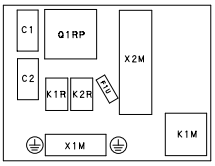


SWITCH BOX

1. :TERMINAL STRIP
   :TERMINAL CONNECTION
2. :FIELD WIRING
3. SYMBOLS SHOW AS FOLLOWS
   BLK:BLACK RED:RED ORA:ORANGE PNK:PINK
   BLU:BLUE WHT:WHITE YLW:YELLOW GRY:GRAY
4. CHANGE THE CONNECTION OF TERMINAL STRIP AND PHASE REVERSAL PROTECTOR ACCORDING TO THE TABLE 1.

TABLE 1 ✱FACTORY CONNECTION

| VOLTAGE | TERMINAL |
|---|---|
| 380V | ✱R-S-T1 |
| 400・415V | R-S-T2 |

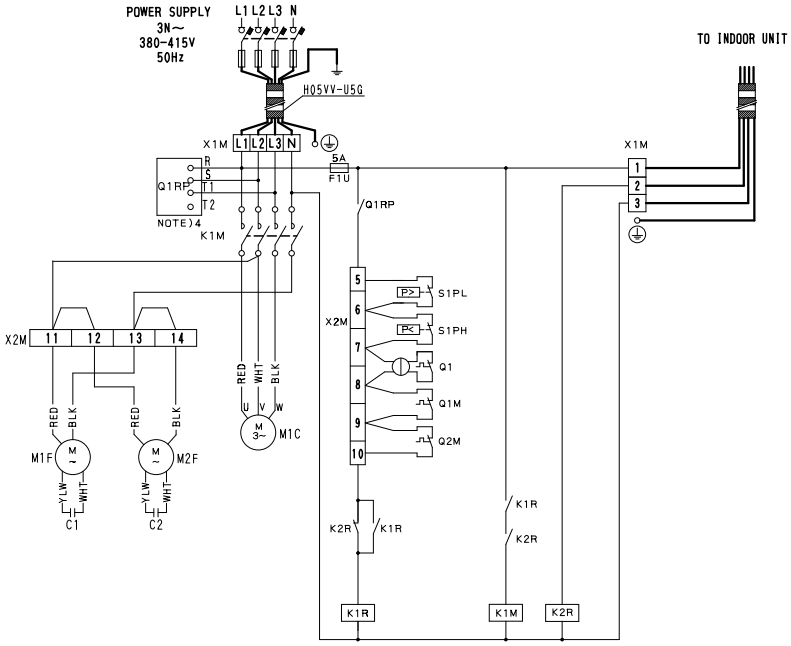


3D051535A

## R56NUY1

| | | | |
|---|---|---|---|
| L1-RED | L2-WHT | L3-BLK | N-BLU |
| C1・C2 | CAPACITOR (M1F・M2F) | | |
| F1U | FUSE (250V 5A) | | |
| K1S | OVER CURRENT RELAY(M1C) | | |
| K1M | MAGNETIC CONTACTOR(M1C) | | |
| K1R・K2R | MAGNETIC RELAY(ALARM) | | |
| M1C | MOTOR (COMPRESSOR) | | |
| M1F・M2F | MOTOR (OUTDOOR FAN) | | |
| Q1M・Q2M | THERMO SWITCH (M1F・M2F) | | |
| Q1RP | REVERSE PHASE PROTECTOR | | |
| Q1 | THERMO SWITCH (DISCHARGE PIPE) | | |
| S1PH | PRESSURE SWITCH (HIGH) | | |
| S1PL | PRESSURE SWITCH (LOW) | | |
| X1M・X2M | TERMINAL STRIP(OUTDOOR UNIT) | | |

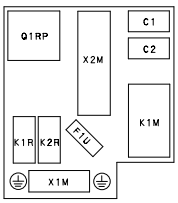


SWITCH BOX

1. :TERMINAL STRIP
   :TERMINAL CONNECTION
2. :FIELD WIRING
3. SYMBOLS SHOW AS FOLLOWS
   BLK:BLACK RED:RED ORA:ORANGE PNK:PINK
   BLU:BLUE WHT:WHITE YLW:YELLOW GRY:GRAY
4. CHANGE THE CONNECTION OF TERMINAL STRIP AND PHASE REVERSAL PROTECTOR ACCORDING TO THE TABLE 1.

TABLE 1 ✱FACTORY CONNECTION

| VOLTAGE | TERMINAL |
|---|---|
| 380V | ✱R-S-T1 |
| 400・415V | R-S-T2 |

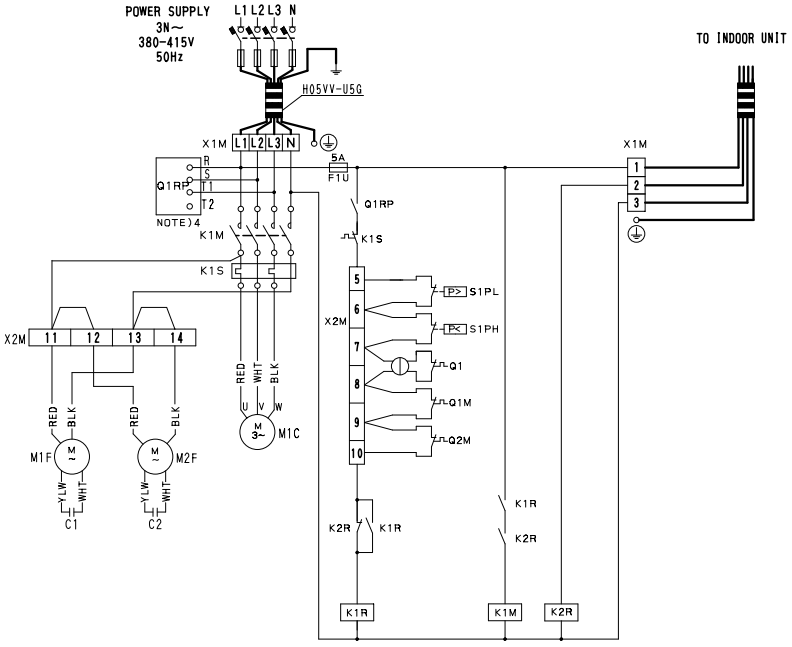


3D052107

## 7.4 Field wiring

**R18NUV1 / R21NUV1 / R26NUV1 / R26NUY1 / R30NUV1 / R30NUY1**

Notes
1) ——— Line voltage wiring
——— Control circuit wiring
2) All wiring, components and materials to be procured on the site must comply with the applicable local and national codes.
3) Use copper conductor only.
4) As for details, see wiring diagrams.
5) Install fuse and mainswitch for safety.
6) All field wiring and components must be provided by a licensed electrician.
7) Unit shall be grounded in compliance with the applicable local and national codes.
8) Wiring shown are general points-of-connection guides only and are not intended for or to include all details for a specific installation.
9) Never share a common power source with other equipment.

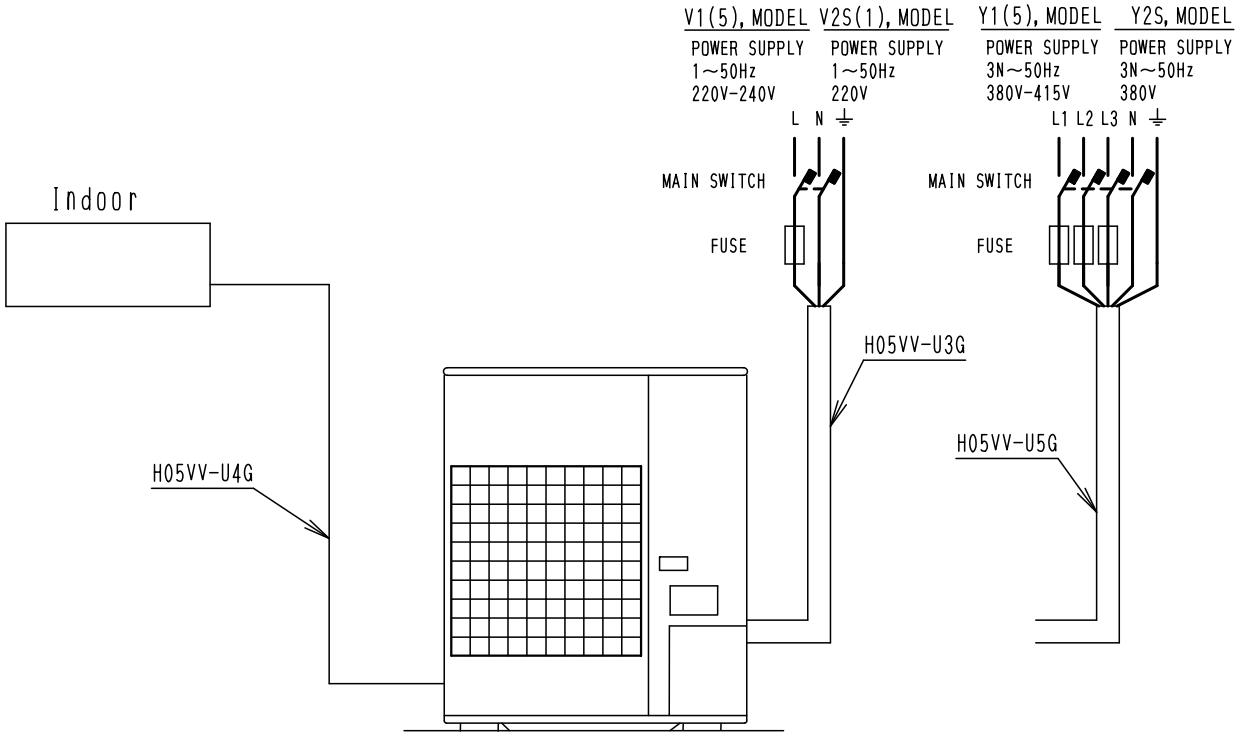


4D054220C

**R36NUV1 / R36NUY1 / R42NUY1 / R48NUY1 / R51NUY1 / R56NUY1**

Notes
1) ——— Line voltage wiring
——— Control circuit wiring
2) All wiring, components and materials to be procured on the site must comply with the applicable local and national codes.
3) Use copper conductor only.
4) As for details, see wiring diagrams.
5) Install fuse and mainswitch for safety.
6) All field wiring and components must be provided by a licensed electrician.
7) Unit shall be grounded in compliance with the applicable local and national codes.
8) Wiring shown are general points-of-connection guides only and are not intended for or to include all details for a specific installation.
9) Never share a common power source with other equipment.

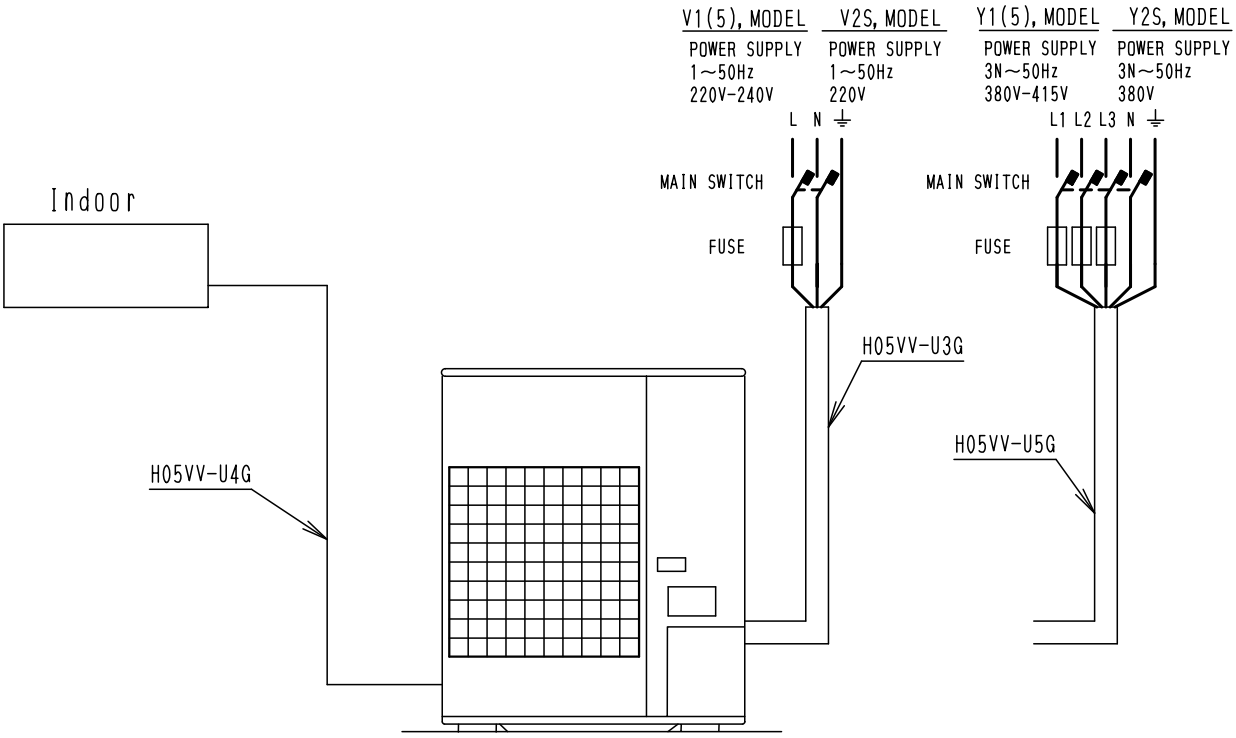


4D052570

# 8. Electric characteristics

## 8.1 R18NUV1 / R21NUV1

| Unit combination | | Power supply | | | | | Compressor | | OFM | | IFM | |
|---|---|---|---|---|---|---|---|---|---|---|---|---|
| Indoor | Outdoor | Hz - Volts | Voltage range | MCA | TOCA | MFA | LRA | RLA | kW | FLA | kW | FLA |
| FHC18NUV1(5) | R18NUV1(5) | 50 - 220<br>50 - 230<br>50 - 240 | Max. 50Hz264V<br>Min. 50Hz198V | 11.8 | 12.8 | 20 | 42<br>44<br>46 | 8.6<br>8.7<br>8.7 | 0.045 | 0.30 | 0.045 | 0.60 |
| FDBG18NUV1(5) | R18NUV1(5) | 50 - 220<br>50 - 230<br>50 - 240 | | 12.2 | 13.4 | 20 | 42<br>44<br>46 | 9.1<br>9.2<br>9.2 | 0.045 | 0.30 | 0.045 | 0.40 |
| FHC21NUV1(5) | R21NUV1(5) | 50 - 220<br>50 - 230<br>50 - 240 | Max. 50Hz264V<br>Min. 50Hz198V | 14.8 | 16.2 | 20 | 55<br>57.5<br>60 | 10.9<br>10.9<br>10.9 | 0.053 | 0.60 | 0.045 | 0.60 |
| FH21NUV1(5) | R21NUV1(5) | 50 - 220<br>50 - 230<br>50 - 240 | | 16.7 | 18.2 | 25 | 55<br>57.5<br>60 | 12.3<br>12.4<br>12.4 | 0.053 | 0.60 | 0.098 | 0.60 |
| FDBG21NUV1(5) | R21NUV1(5) | 50 - 220<br>50 - 230<br>50 - 240 | | 17.4 | 18.9 | 25 | 55<br>57.5<br>60 | 12.9<br>13.0<br>13.0 | 0.053 | 0.60 | 0.060 | 0.50 |

Note:

1. RLA is based on the following conditions.
   Indoor temp. 27℃DB / 19℃WB
   Outdoor temp. 35℃DB
2. TOCA means the total value of each OC set.
3. Voltage range
   Units are suitable for use on electrical systems where voltage supplied to unit terminals is not below or above listed range limits.
4. Maximum allowable voltage unbalance between phases is 2%.
5. MCA/MFA
   MCA = 1.25 X RLA + ea. FLA
   MFA ≦ 2.25 X RLA + ea. FLA
   (Next lower standard fuse rating. Min. 15A)
6. Select wire size based on the larger value of MCA or TOCA.
7. Instead of fuse, use Circuit Breaker.

Symbols:

MCA : Min. Circuit Amps
TOCA: Total Over-current Amps
MFA : Max. Fuse Amps (See note 7)
LRA : Locked Rotor Amps
RLA : Rated Load Amps
OFM : Outdoor Fan Motor
IFM : Indoor Fan Motor
FLA : Full Load Amps
kW : Fan Motor Rated Output

3D054360A

1

## 8.2 R26NUV1 / R26NUY1 / R30NUV1 / R30NUY1

| Unit combination | | Power supply | | | | | Compressor | | OFM | | IFM | |
|---|---|---|---|---|---|---|---|---|---|---|---|---|
| Indoor | Outdoor | Hz - Volts | Voltage range | MCA | TOCA | MFA | LRA | RLA | kW | FLA | kW | FLA |
| FDMG26NUV1 | R26NUV1 | 50 - 220 | Max. 50Hz264V Min. 50Hz198V | 18.6 | 20.3 | 30 | 85.0 | 12.8 | 0.09 | 0.8 | 0.125 | 1.2 |
| | | 50 - 230 | | | | | 89.0 | 12.9 | | | | |
| | | 50 - 240 | | | | | 93.0 | 13.3 | | | | |
| FHC26NUV1 | R26NUV1 | 50 - 220 | | 18.0 | 19.7 | 30 | 85.0 | 13.2 | 0.09 | 0.8 | 0.045 | 0.6 |
| | | 50 - 230 | | | | | 89.0 | 13.3 | | | | |
| | | 50 - 240 | | | | | 93.0 | 13.3 | | | | |
| FH26NUV1 | R26NUV1 | 50 - 220 | | 18.3 | 20.0 | 30 | 85.0 | 13.4 | 0.09 | 0.8 | 0.098 | 0.6 |
| | | 50 - 230 | | | | | 89.0 | 13.5 | | | | |
| | | 50 - 240 | | | | | 93.0 | 13.5 | | | | |
| FDBG26NUV1 | R26NUV1 | 50 - 220 | | 20.7 | 22.6 | 35 | 85.0 | 15.4 | 0.09 | 0.8 | 0.060 | 0.5 |
| | | 50 - 230 | | | | | 89.0 | 15.5 | | | | |
| | | 50 - 240 | | | | | 93.0 | 15.5 | | | | |
| FDMG26NUV1 | R26NUY1 | 50-380/220 | Max. 50Hz456V Min. 50Hz342V | 7.8 | 8.3 | 15 | 42.0 | 4.5 | 0.09 | 0.8 | 0.125 | 1.2 |
| | | 50-400/230 | | | | | 44.0 | 4.6 | | | | |
| | | 50-415/240 | | | | | 46.0 | 4.6 | | | | |
| FHC26NUV1 | R26NUY1 | 50-380/220 | | 7.2 | 7.7 | 15 | 42.0 | 4.6 | 0.09 | 0.8 | 0.045 | 0.6 |
| | | 50-400/230 | | | | | 44.0 | 4.6 | | | | |
| | | 50-415/240 | | | | | 46.0 | 4.6 | | | | |
| FH26NUV1 | R26NUY1 | 50-380/220 | | 7.3 | 7.9 | 15 | 42.0 | 4.7 | 0.09 | 0.8 | 0.098 | 0.6 |
| | | 50-400/230 | | | | | 44.0 | 4.7 | | | | |
| | | 50-415/240 | | | | | 46.0 | 4.7 | | | | |
| FDBG26NUV1 | R26NUY1 | 50-380/220 | | 7.8 | 8.5 | 15 | 42.0 | 5.2 | 0.09 | 0.8 | 0.060 | 0.5 |
| | | 50-400/230 | | | | | 44.0 | 5.2 | | | | |
| | | 50-415/240 | | | | | 46.0 | 5.2 | | | | |
| FDMG30NUV1 | R30NUV1 | 50 - 220 | Max. 50Hz264V Min. 50Hz198V | 19.8 | 21.6 | 30 | 85.0 | 14.0 | 0.09 | 0.8 | 0.225 | 1.50 |
| | | 50 - 230 | | | | | 89.0 | 14.0 | | | | |
| | | 50 - 240 | | | | | 93.0 | 14.5 | | | | |
| FHC30NUV1 | R30NUV1 | 50 - 220 | | 20.1 | 21.9 | 30 | 85.0 | 14.6 | 0.09 | 0.8 | 0.200 | 1.00 |
| | | 50 - 230 | | | | | 89.0 | 14.7 | | | | |
| | | 50 - 240 | | | | | 93.0 | 14.7 | | | | |
| FH30NUV1 | R30NUV1 | 50 - 220 | | 20.3 | 22.1 | 35 | 85.0 | 15.0 | 0.09 | 0.8 | 0.098 | 0.70 |
| | | 50 - 230 | | | | | 89.0 | 15.1 | | | | |
| | | 50 - 240 | | | | | 93.0 | 15.1 | | | | |
| FDMG30NUV1 | R30NUY1 | 50-380/220 | Max. 50Hz456V Min. 50Hz342V | 8.4 | 9.0 | 15 | 42.0 | 4.9 | 0.09 | 0.8 | 0.225 | 1.50 |
| | | 50-400/230 | | | | | 44.0 | 5.0 | | | | |
| | | 50-415/240 | | | | | 46.0 | 5.1 | | | | |
| FHC30NUV1 | R30NUY1 | 50-380/220 | | 8.2 | 8.8 | 15 | 42.0 | 5.1 | 0.09 | 0.8 | 0.200 | 1.00 |
| | | 50-400/230 | | | | | 44.0 | 5.1 | | | | |
| | | 50-415/240 | | | | | 46.0 | 5.1 | | | | |
| FH30NUV1 | R30NUY1 | 50-380/220 | | 8.0 | 8.7 | 15 | 42.0 | 5.2 | 0.09 | 0.8 | 0.098 | 0.70 |
| | | 50-400/230 | | | | | 44.0 | 5.2 | | | | |
| | | 50-415/240 | | | | | 46.0 | 5.2 | | | | |

**Note:**

1. RLA is based on the following conditions.
   Indoor temp. 27℃DB / 19℃WB
   Outdoor temp. 35℃DB
2. TOCA means the total value of each OC set.
3. Voltage range
   Units are suitable for use on electrical systems where voltage supplied to unit terminals is not below or above listed range limits.
4. Maximum allowable voltage unbalance between phases is 2%.
5. MCA/MFA
   MCA = 1.25 X RLA + ea. FLA
   MFA ≦ 2.25 X RLA + ea. FLA
   (Next lower standard fuse rating. Min. 15A)
6. Select wire size based on the larger value of MCA or TOCA.
7. Instead of fuse, use Circuit Breaker.

**Symbols:**

MCA : Min. Circuit Amps
TOCA: Total Over-current Amps
MFA : Max. Fuse Amps (See note 7)
LRA : Locked Rotor Amps
RLA : Rated Load Amps
OFM : Outdoor Fan Motor
IFM : Indoor Fan Motor
FLA : Full Load Amps
kW : Fan Motor Rated Output

3D054365C
3D064440

## 8.3 R36NUV1 / R36NUY1 / R42NUY1 / R48NUY1 / R51NUY1 / R56NUY1

| Unit combination | | Power supply | | | | | Comp | | OFM | | IFM | |
|---|---|---|---|---|---|---|---|---|---|---|---|---|
| Indoor | Outdoor | Hz - Volts | Voltage range | MCA | TOCA | MFA | LRA | RLA | kW | FLA | kW | FLA |
| FH36NUV1 | R36NUV1 | 50 - 220<br>50 - 230<br>50 - 240 | Max. 50Hz264V<br>Min. 50Hz198V | 23.9 | 28.8 | 40 | 94.8<br>98.5<br>102.5 | 17.4<br>17.4<br>18.0 | 0.09 | 0.8 | 0.070 | 0.62 |
| FDMG36NUV1 | R36NUV1 | 50 - 220<br>50 - 230<br>50 - 240 | | 24.8 | 29.7 | 40 | 94.8<br>98.5<br>102.5 | 17.4<br>17.4<br>18.0 | 0.09 | 0.8 | 0.225 | 1.5 |
| FHC36NUV1 | R36NUV1 | 50 - 220<br>50 - 230<br>50 - 240 | | 24.3 | 29.2 | 40 | 94.8<br>98.5<br>102.5 | 17.4<br>17.4<br>18.0 | 0.09 | 0.8 | 0.090 | 1.0 |
| FH36NUV1 | R36NUY1 | 50 - 380/220<br>50 - 400/230<br>50 - 415/240 | Max. 50Hz 456/264V<br>Min. 50Hz 342/198V | 8.8 | 10.5 | 15 | 50.2<br>51.7<br>53.7 | 5.7<br>5.8<br>5.9 | 0.09 | 0.8 | 0.070 | 0.62 |
| FDMG36NUV1 | R36NUY1 | 50 - 380/220<br>50 - 400/230<br>50 - 415/240 | | 9.7 | 11.4 | 15 | 50.2<br>51.7<br>53.7 | 5.7<br>5.8<br>5.9 | 0.09 | 0.8 | 0.225 | 1.5 |
| FHC36NUV1 | R36NUY1 | 50 - 380/220<br>50 - 400/230<br>50 - 415/240 | | 9.2 | 10.9 | 15 | 50.2<br>51.7<br>53.7 | 5.7<br>5.8<br>5.9 | 0.09 | 0.8 | 0.090 | 1.0 |
| FH42NUV1 | R42NUY1 | 50 - 380/220<br>50 - 400/230<br>50 - 415/240 | Max. 50Hz 456/264V<br>Min. 50Hz 342/198V | 12.0 | 13.8 | 20 | 59.0<br>61.4<br>63.1 | 7.5<br>7.6<br>7.8 | 0.065<br>+0.090 | 0.6<br>+0.8 | 0.098 | 0.85 |
| FDMG42NUV1 | R42NUY1 | 50 - 380/220<br>50 - 400/230<br>50 - 415/240 | | 12.8 | 14.5 | 20 | 59.0<br>61.4<br>63.1 | 7.5<br>7.6<br>7.8 | 0.065<br>+0.090 | 0.6<br>+0.8 | 0.225 | 1.6 |
| FHC42NUV1 | R42NUY1 | 50 - 380/220<br>50 - 400/230<br>50 - 415/240 | | 12.2 | 13.9 | 20 | 59.0<br>61.4<br>63.1 | 7.5<br>7.6<br>7.8 | 0.065<br>+0.090 | 0.6<br>+0.8 | 0.090 | 1.0 |
| FH48NUV1 | R48NUY1 | 50 - 380/220<br>50 - 400/230<br>50 - 415/240 | Max. 50Hz 456/264V<br>Min. 50Hz 342/198V | 12.4 | 14.2 | 20 | 65.0<br>69.1<br>71.0 | 7.8<br>7.9<br>8.1 | 0.065<br>+0.090 | 0.6<br>+0.8 | 0.098 | 0.85 |
| FDMG48NUV1 | R48NUY1 | 50 - 380/220<br>50 - 400/230<br>50 - 415/240 | | 13.1 | 14.9 | 20 | 65.0<br>69.1<br>71.0 | 7.8<br>7.9<br>8.1 | 0.065<br>+0.090 | 0.6<br>+0.8 | 0.225 | 1.6 |
| FHC48NUV1 | R48NUY1 | 50 - 380/220<br>50 - 400/230<br>50 - 415/240 | | 12.5 | 14.3 | 20 | 65.0<br>69.1<br>71.0 | 7.8<br>7.9<br>8.1 | 0.065<br>+0.090 | 0.6<br>+0.8 | 0.090 | 1.0 |
| FDMG51NUV1 | R51NUY1 | 50 - 380/220<br>50 - 400/230<br>50 - 415/240 | Max. 50Hz 456/264V<br>Min. 50Hz 342/198V | 13.7 | 15.1 | 20 | 65.0<br>69.1<br>71.0 | 8.1<br>8.2<br>8.4 | 0.065<br>+0.090 | 0.6<br>+0.8 | 0.225 | 1.8 |
| FDMG56NUV1 | R56NUY1 | 50 - 380/220<br>50 - 400/230<br>50 - 415/240 | Max. 50Hz 456/264V<br>Min. 50Hz 342/198V | 15.4 | 18.1 | 25 | 83.0 | 9.8 | 0.07<br>+0.06 | 0.7<br>+0.6 | 0.225 | 1.8 |

Note:
1. RLA is based on the following conditions.
   Indoor temp. 27℃DB / 19.0℃WB
   Outdoor temp. 35℃DB
2. TOCA means the total value of each OC set.
3. Voltage range
   Units are suitable for use on electrical systems where voltage supplied to unit terminals is not below or above listed range limits.
4. Maximum allowable voltage unbalance between phases is 2%.
5. MCA/MFA
   MCA = 1.25 X RLA + ea. FLA
   MFA ≦ 2.25 X RLA + ea. FLA
   (Next lower standard fuse rating. Min. 15A)
6. Select wire size based on the larger value of MCA or TOCA.
7. Instead of fuse, use circuit breaker.

Symbols:
MCA : Min. Circuit Amps
TOCA: Total Over-current Amps
MFA : Max. Fuse Amps (See note 7)
LRA : Locked Rotor Amps
RLA : Rated Load Amps
OFM : Outdoor Fan Motor
IFM : Indoor Fan Motor
FLA : Full Load Amps
kW : Fan Motor Rated Output

3D052523
3D052524
3D052525
3D052526
3D052573

# 9. Capacity tables

## 9.1 Cooling capacity

### FHC18NUV1 / FDBG18NUV1 + R18NUV1

Cooling Capacity (50Hz)

| INDOOR | | Outdoor temperature (℃DB) | | | | | | | | | | | | | | | | | |
|---|---|---|---|---|---|---|---|---|---|---|---|---|---|---|---|---|---|---|---|
| EWB (℃) | EDB (℃) | 21 | | | 25 | | | 32 | | | 35 | | | 40 | | | 46 | | |
| | | TC | SHC | PI | TC | SHC | PI | TC | SHC | PI | TC | SHC | PI | TC | SHC | PI | TC | SHC | PI |
| 14 | 20 | 5.3 | 3.6 | 1.79 | 5.2 | 3.5 | 1.87 | 5.0 | 3.4 | 1.99 | 4.9 | 3.4 | 2.05 | 4.8 | 3.3 | 2.14 | 4.6 | 3.2 | 2.25 |
| 16 | 22 | 5.5 | 3.6 | 1.82 | 5.4 | 3.5 | 1.89 | 5.2 | 3.4 | 2.01 | 5.1 | 3.4 | 2.07 | 4.9 | 3.3 | 2.17 | 4.7 | 3.2 | 2.27 |
| 18 | 25 | 5.6 | 3.6 | 1.84 | 5.5 | 3.6 | 1.92 | 5.3 | 3.5 | 2.04 | 5.2 | 3.4 | 2.10 | 5.1 | 3.4 | 2.19 | 4.9 | 3.3 | 2.30 |
| 19 | 27 | 5.7 | 3.6 | 1.86 | 5.6 | 3.6 | 1.93 | 5.4 | 3.5 | 2.05 | 5.3 | 3.5 | 2.11 | 5.2 | 3.4 | 2.21 | 5.0 | 3.3 | 2.31 |
| 19.5 | 27 | 5.8 | 3.7 | 1.86 | 5.6 | 3.6 | 1.93 | 5.4 | 3.5 | 2.06 | 5.3 | 3.5 | 2.12 | 5.2 | 3.4 | 2.21 | 5.0 | 3.3 | 2.31 |
| 22 | 30 | 5.9 | 3.7 | 1.89 | 5.8 | 3.6 | 1.96 | 5.6 | 3.5 | 2.09 | 5.5 | 3.5 | 2.15 | 5.4 | 3.4 | 2.24 | 5.2 | 3.4 | 2.35 |
| 24 | 32 | 6.0 | 3.7 | 1.90 | 5.9 | 3.7 | 1.97 | 5.7 | 3.6 | 2.11 | 5.6 | 3.5 | 2.16 | 5.5 | 3.4 | 2.26 | 5.3 | 3.4 | 2.36 |

Symbols:
AFR: Air flow rate ($m^3$/min.)
BF : By pass factor
EWB: Entering wet bulb temp. (℃WB)
EDB: Entering dry bulb temp. (℃DB)
TC : Total cooling capacity (kW)
SHC: Sensible heat capacity (kW)
PI : Power input (kW)
(Comp.+indoor+outdoor fan motor).

Caution
TC and SHC are shown by kW.

Notes:
1. Ratings shown are net capacities which include a deduction for indoor fan motor heat.
2. ▭ shows rated capacities.
3. SHC is based on each EWB and EDB.
SHC*=SHC correction for other dry bulb.(DB*)
=0.02xAFRx(1-BF)x(DB*-EDB)
Add SHC* to SHC.
4. Direct interpolation is permissible.
Do not extrapolate.
5. Capacities are based on the following conditions.
Corresponding refrigerant piping length :
7.5m at 220V or 380V.
Level difference :0m
6. Air flow rate and (BF) are taburated below.

| | FHC | FDBG |
|---|---|---|
| AFR (BF) | 15 (0.18) | 13 (0.09) |

7. Add the following correction to power input of each model.

| | FHC | FDBG |
|---|---|---|
| POWER SUPPLY | -0.09 | 0.00 |

3D054363A

### FHC21NUV1 / FH21NUV1 / FDBG21NUV1 + R21NUV1

Cooling Capacity (50Hz)

| INDOOR | | Outdoor temperature (℃DB) | | | | | | | | | | | | | | | | | |
|---|---|---|---|---|---|---|---|---|---|---|---|---|---|---|---|---|---|---|---|
| EWB (℃) | EDB (℃) | 21 | | | 25 | | | 32 | | | 35 | | | 40 | | | 46 | | |
| | | TC | SHC | PI | TC | SHC | PI | TC | SHC | PI | TC | SHC | PI | TC | SHC | PI | TC | SHC | PI |
| 14 | 20 | 6.2 | 3.9 | 2.35 | 6.1 | 3.9 | 2.44 | 5.9 | 3.8 | 2.58 | 5.8 | 3.7 | 2.64 | 5.6 | 3.7 | 2.74 | 5.5 | 3.6 | 2.86 |
| 16 | 22 | 6.3 | 4.0 | 2.38 | 6.2 | 3.9 | 2.46 | 6.0 | 3.8 | 2.60 | 5.9 | 3.8 | 2.67 | 5.8 | 3.7 | 2.78 | 5.6 | 3.6 | 2.89 |
| 18 | 25 | 6.5 | 4.0 | 2.41 | 6.4 | 3.9 | 2.49 | 6.2 | 3.8 | 2.63 | 6.1 | 3.8 | 2.70 | 5.9 | 3.7 | 2.80 | 5.8 | 3.7 | 2.93 |
| 19 | 27 | 6.6 | 4.0 | 2.43 | 6.4 | 4.0 | 2.50 | 6.2 | 3.9 | 2.64 | 6.2 | 3.8 | 2.71 | 6.0 | 3.8 | 2.82 | 5.8 | 3.7 | 2.94 |
| 19.5 | 27 | 6.6 | 4.0 | 2.43 | 6.5 | 4.0 | 2.51 | 6.3 | 3.9 | 2.65 | 6.2 | 3.8 | 2.72 | 6.0 | 3.8 | 2.82 | 5.9 | 3.7 | 2.94 |
| 22 | 30 | 6.8 | 4.1 | 2.46 | 6.7 | 4.0 | 2.55 | 6.5 | 3.9 | 2.69 | 6.4 | 3.9 | 2.75 | 6.2 | 3.8 | 2.85 | 6.1 | 3.7 | 2.98 |
| 24 | 32 | 6.9 | 4.1 | 2.48 | 6.7 | 4.0 | 2.56 | 6.5 | 3.9 | 2.71 | 6.5 | 3.9 | 2.76 | 6.3 | 3.8 | 2.87 | 6.1 | 3.7 | 2.99 |

Symbols:
AFR: Air flow rate ($m^3$/min.)
BF : By pass factor
EWB: Entering wet bulb temp. (℃WB)
EDB: Entering dry bulb temp. (℃DB)
TC : Total cooling capacity (kW)
SHC: Sensible heat capacity (kW)
PI : Power input (kW)
(Comp.+indoor+outdoor fan motor).

Caution
TC and SHC are shown by kW.

Notes:
1. Ratings shown are net capacities which include a deduction for indoor fan motor heat.
2. ▭ shows rated capacities.
3. SHC is based on each EWB and EDB.
SHC*=SHC correction for other dry bulb.(DB*)
=0.02xAFRx(1-BF)x(DB*-EDB)
Add SHC* to SHC.
4. Direct interpolation is permissible.
Do not extrapolate.
5. Capacities are based on the following conditions.
Corresponding refrigerant piping length :
7.5m at 220V or 380V.
Level difference :0m
6. Air flow rate and (BF) are taburated below.

| | FHC | FH | FDBG |
|---|---|---|---|
| AFR (BF) | 19 (0.10) | 22 (0.10) | 18 (0.09) |

7. Add the following correction to power input of each model.

| | FHC | FH | FDBG |
|---|---|---|---|
| POWER SUPPLY | -0.26 | 0.00 | 0.01 |

3D054364A

## FHC26NUV1 / FH26NUV1 / FDBG26NUV1 / FDMG26NUV1 + R26NUV1
## FHC26NUV1 / FH26NUV1 / FDBG26NUV1 / FDMG26NUV1 + R26NUY1

Cooling Capacity 〔50Hz〕

| INDOOR | | Outdoor temperature (℃DB) | | | | | | | | | | | | | | | | | |
|---|---|---|---|---|---|---|---|---|---|---|---|---|---|---|---|---|---|---|---|
| EWB (℃) | EDB (℃) | 21 | | | 25 | | | 32 | | | 35 | | | 40 | | | 46 | | |
| | | TC | SHC | PI | TC | SHC | PI | TC | SHC | PI | TC | SHC | PI | TC | SHC | PI | TC | SHC | PI |
| 14.0 | 20 | 7.7 | 4.9 | 2.74 | 7.5 | 4.9 | 2.84 | 7.4 | 4.8 | 2.93 | 7.2 | 4.7 | 3.04 | 7.1 | 4.7 | 3.13 | 6.9 | 4.6 | 3.26 |
| 16.0 | 22 | 7.8 | 5.0 | 2.77 | 7.7 | 4.9 | 2.86 | 7.5 | 4.8 | 2.97 | 7.4 | 4.7 | 3.07 | 7.2 | 4.7 | 3.16 | 7.1 | 4.6 | 3.29 |
| 18.0 | 25 | 8.0 | 5.0 | 2.79 | 7.8 | 4.9 | 2.89 | 7.7 | 4.9 | 2.99 | 7.5 | 4.8 | 3.09 | 7.4 | 4.7 | 3.18 | 7.2 | 4.6 | 3.32 |
| 19.0 | 27 | 8.1 | 5.0 | 2.81 | 7.9 | 4.9 | 2.90 | 7.7 | 4.9 | 3.01 | 7.6 | 4.8 | 3.10 | 7.4 | 4.7 | 3.20 | 7.3 | 4.6 | 3.32 |
| 19.5 | 27 | 8.1 | 5.0 | 2.81 | 7.9 | 4.9 | 2.91 | 7.7 | 4.9 | 3.01 | 7.7 | 4.8 | 3.10 | 7.4 | 4.7 | 3.21 | 7.3 | 4.6 | 3.33 |
| 22.0 | 30 | 8.2 | 5.1 | 2.82 | 8.0 | 5.0 | 2.91 | 7.8 | 4.9 | 3.03 | 7.7 | 4.8 | 3.12 | 7.5 | 4.7 | 3.22 | 7.4 | 4.6 | 3.34 |
| 24.0 | 32 | 8.3 | 5.1 | 2.84 | 8.1 | 5.0 | 2.95 | 8.0 | 4.9 | 3.04 | 7.8 | 4.9 | 3.14 | 7.7 | 4.8 | 3.23 | 7.5 | 4.8 | 3.37 |

Symbols:
AFR: Air flow rate ($m^3$/min.)
BF : Bypass factor
EWB: Entering wet bulb temp. (℃WB)
EDB: Entering dry bulb temp. (℃DB)
TC : Total cooling capacity (kW)
SHC: Sensible heat capacity (kW)
PI : Power input (kW)
(Comp.+indoor+outdoor fan motor).

Caution
TC and SHC are shown by kW.

Notes:
1. Ratings shown are net capacities which include a deduction for indoor fan motor heat.
2. ▭ shows nominal capacities.
3. SHC is based on each EWB and EDB.
   SHC*=SHC correction for other dry bulb.(DB*)
   =0.02xAFRx(1-BF)x(DB*-EDB)
   Add SHC* to SHC.
4. Direct interpolation is permissible.
   Do not extrapolate.
5. Capacities are based on the following conditions.
   Corresponding refrigerant piping length :7.5m
   Level difference :0m
6. The value contains less than 5% error according to indoor unit type.
7. Air flow rate and (BF) are taburated below.
(Model R~NUV2S, R~NUY2S)

| | FDBG | FH | FHC | FDMG |
|---|---|---|---|---|
| AFR (BF) | 18 (0.07) | 22 (0.10) | 19 (0.10) | 23 (0.12) |

8. Add the following correction to power input of each model.

| | | FDBG | FH | FHC | FDMG |
|---|---|---|---|---|---|
| Model R~NUV2S R~NUY2S | Power supply | 0.23 | 0.00 | -0.03 | 0.05 |

3D054484A

## FHC30NUV1 / FH30NUV1 / FDMG30NUV1 + R30NUV1
## FHC30NUV1 / FH30NUV1 / FDMG30NUV1 + R30NUY1

Cooling Capacity 〔50Hz〕

| INDOOR | | Outdoor temperature (℃DB) | | | | | | | | | | | | | | | | | |
|---|---|---|---|---|---|---|---|---|---|---|---|---|---|---|---|---|---|---|---|
| EWB (℃) | EDB (℃) | 21 | | | 25 | | | 32 | | | 35 | | | 40 | | | 46 | | |
| | | TC | SHC | PI | TC | SHC | PI | TC | SHC | PI | TC | SHC | PI | TC | SHC | PI | TC | SHC | PI |
| 14.0 | 20 | 8.9 | 5.7 | 3.07 | 8.7 | 5.7 | 3.19 | 8.6 | 5.5 | 3.29 | 8.4 | 5.4 | 3.41 | 8.3 | 5.4 | 3.51 | 8.0 | 5.3 | 3.66 |
| 16.0 | 22 | 9.0 | 5.8 | 3.11 | 8.9 | 5.7 | 3.21 | 8.7 | 5.5 | 3.33 | 8.6 | 5.4 | 3.42 | 8.4 | 5.4 | 3.55 | 8.2 | 5.3 | 3.69 |
| 18.0 | 25 | 9.2 | 5.8 | 3.13 | 9.0 | 5.7 | 3.25 | 8.9 | 5.7 | 3.35 | 8.7 | 5.5 | 3.47 | 8.6 | 5.4 | 3.57 | 8.4 | 5.3 | 3.72 |
| 19.0 | 27 | 9.3 | 5.8 | 3.16 | 9.1 | 5.7 | 3.26 | 8.9 | 5.7 | 3.38 | 8.8 | 5.5 | 3.48 | 8.6 | 5.4 | 3.60 | 8.4 | 5.3 | 3.73 |
| 19.5 | 27 | 9.4 | 5.8 | 3.16 | 9.1 | 5.7 | 3.26 | 8.9 | 5.7 | 3.38 | 8.9 | 5.5 | 3.48 | 8.6 | 5.4 | 3.60 | 8.5 | 5.3 | 3.73 |
| 22.0 | 30 | 9.5 | 5.9 | 3.17 | 9.2 | 5.8 | 3.27 | 9.0 | 5.7 | 3.40 | 8.9 | 5.5 | 3.50 | 8.7 | 5.4 | 3.62 | 8.5 | 5.3 | 3.75 |
| 24.0 | 32 | 9.6 | 5.9 | 3.19 | 9.3 | 5.8 | 3.31 | 9.2 | 5.7 | 3.41 | 9.0 | 5.7 | 3.53 | 8.9 | 5.5 | 3.63 | 8.7 | 5.5 | 3.78 |

Symbols:
AFR: Air flow rate ($m^3$/min.)
BF : Bypass factor
EWB: Entering wet bulb temp. (℃WB)
EDB: Entering dry bulb temp. (℃DB)
TC : Total cooling capacity (kW)
SHC: Sensible heat capacity (kW)
PI : Power input (kW)
(Comp.+indoor+outdoor fan motor).

Caution
TC and SHC are shown by kW.

Notes:
1. Ratings shown are net capacities which include a deduction for indoor fan motor heat.
2. ▭ shows nominal capacities.
3. SHC is based on each EWB and EDB.
   SHC*=SHC correction for other dry bulb.(DB*)
   =0.02xAFRx(1-BF)x(DB*-EDB)
   Add SHC* to SHC.
4. Direct interpolation is permissible.
   Do not extrapolate.
5. Capacities are based on the following conditions.
   Corresponding refrigerant piping length :7.5m
   Level difference :0m
6. The value contains less than 5% error according to indoor unit type.
7. Air flow rate and (BF) are taburated below.

| | FH | FHC | FDMG |
|---|---|---|---|
| AFR (BF) | 26 (0.04) | 28 (0.16) | 34 (0.11) |

8. Add the following correction to power input of each model.

| | FH | FHC | FDMG |
|---|---|---|---|
| Power supply | 0.00 | -0.03 | -0.02 |

3D064647A

## FHC36NUV1 / FH36NUV1 / FDMG36NUV1 + R36NUV1
## FHC36NUV1 / FH36NUV1 / FDMG36NUV1 + R36NUY1

Cooling Capacity [ 50Hz ]

| INDOOR | | Outdoor temperature (℃DB) | | | | | | | | | | | | | | | | | |
|---|---|---|---|---|---|---|---|---|---|---|---|---|---|---|---|---|---|---|---|
| EWB (℃) | EDB (℃) | 21 | | | 25 | | | 32 | | | 35 | | | 40 | | | 46 | | |
| | | TC | SHC | PI | TC | SHC | PI | TC | SHC | PI | TC | SHC | PI | TC | SHC | PI | TC | SHC | PI |
| 14 | 20 | 9.9 | 7.4 | 2.94 | 9.8 | 7.3 | 3.32 | 9.2 | 7.1 | 3.58 | 9.1 | 7.0 | 3.82 | 8.6 | 6.7 | 4.19 | 8.1 | 6.5 | 4.58 |
| 16 | 22 | 10.5 | 7.5 | 3.00 | 10.3 | 7.4 | 3.34 | 9.9 | 7.2 | 3.63 | 9.6 | 7.1 | 3.89 | 9.2 | 6.9 | 4.24 | 8.6 | 6.6 | 4.64 |
| 18 | 25 | 11.2 | 7.7 | 3.09 | 11.0 | 7.6 | 3.38 | 10.4 | 7.3 | 3.72 | 10.2 | 7.2 | 3.98 | 9.7 | 7.1 | 4.33 | 9.2 | 6.7 | 4.74 |
| 19 | 27 | 11.6 | 7.8 | 3.14 | 11.4 | 7.7 | 3.41 | 10.7 | 7.4 | 3.80 | 10.6 | 7.3 | 4.04 | 10.1 | 7.1 | 4.38 | 9.5 | 6.9 | 4.83 |
| 19.5 | 27 | 11.7 | 7.8 | 3.14 | 11.5 | 7.7 | 3.41 | 10.9 | 7.4 | 3.80 | 10.7 | 7.3 | 4.04 | 10.2 | 7.1 | 4.38 | 9.6 | 6.9 | 4.83 |
| 22 | 30 | 12.6 | 7.9 | 3.21 | 12.3 | 7.8 | 3.46 | 11.7 | 7.6 | 3.91 | 11.5 | 7.4 | 4.12 | 11.0 | 7.3 | 4.46 | 10.3 | 7.1 | 4.95 |
| 24 | 32 | 13.4 | 8.0 | 3.21 | 13.1 | 7.9 | 3.50 | 12.5 | 7.7 | 4.00 | 12.2 | 7.6 | 4.16 | 11.6 | 7.3 | 4.52 | 10.8 | 7.1 | 5.04 |

Symbols:
AFR: Air flow rate ($m^3$/min.)
BF : By pass factor
EWB: Entering wet bulb temp. (℃WB)
EDB: Entering dry bulb temp. (℃DB)
TC : Total cooling capacity (kW)
SHC: Sensible heat capacity (kW)
PI : Power input (kW)
(Comp.+indoor+outdoor fan motor).

Caution
TC and SHC are shown by kW.

Notes:
1. Ratings shown are net capacities which include a deduction for indoor fan motor heat.
2. ▭ shows rated capacities.
3. SHC is based on each EWB and EDB.
SHC'=SHC correction for other dry bulb.(DB')
=0.02xAFRx(1-BF)x(DB'-EDB)
Add SHC' to SHC.
4. Direct interpolation is permissible.
Do not extrapolate.
5. Capacities are based on the following conditions.
Corresponding refrigerant piping length :
7.5m at 220V or 380V.
Level difference :0m
6. Air flow rate and (BF) are taburated below.

| | FHC | FH | FDMG |
|---|---|---|---|
| AFR | 33 | 32 | 37 |
| (BF) | (0.07) | (0.13) | (0.12) |

7. Add the following correction to power input of each model.

| | FHC | FH | FDMG |
|---|---|---|---|
| POWER SUPPLY | 0.00 | 0.02 | 0.12 |

3D052745A

## FHC42NUV1 / FH42NUV1 / FDMG42NUV1 + R42NUY1

Cooling Capacity [ 50Hz ]

| INDOOR | | Outdoor temperature (℃DB) | | | | | | | | | | | | | | | | | |
|---|---|---|---|---|---|---|---|---|---|---|---|---|---|---|---|---|---|---|---|
| EWB (℃) | EDB (℃) | 21 | | | 25 | | | 32 | | | 35 | | | 40 | | | 46 | | |
| | | TC | SHC | PI | TC | SHC | PI | TC | SHC | PI | TC | SHC | PI | TC | SHC | PI | TC | SHC | PI |
| 14 | 20 | 11.9 | 9.4 | 3.49 | 11.5 | 9.1 | 3.93 | 10.8 | 8.6 | 4.25 | 10.5 | 8.5 | 4.52 | 9.9 | 8.3 | 4.96 | 9.3 | 7.9 | 5.44 |
| 16 | 22 | 12.8 | 9.5 | 3.56 | 12.2 | 9.2 | 3.96 | 11.5 | 8.7 | 4.31 | 11.1 | 8.6 | 4.61 | 10.5 | 8.4 | 5.03 | 9.8 | 8.0 | 5.50 |
| 18 | 25 | 13.5 | 9.8 | 3.66 | 13.1 | 9.4 | 4.01 | 12.2 | 9.0 | 4.41 | 11.9 | 8.9 | 4.72 | 11.2 | 8.6 | 5.13 | 10.5 | 8.3 | 5.63 |
| 19 | 27 | 13.7 | 9.9 | 3.72 | 13.5 | 9.4 | 4.05 | 12.8 | 9.1 | 4.49 | 12.3 | 8.9 | 4.79 | 11.6 | 8.7 | 5.19 | 10.9 | 8.4 | 5.72 |
| 19.5 | 27 | 13.9 | 9.9 | 3.72 | 13.6 | 9.4 | 4.05 | 12.9 | 9.1 | 4.49 | 12.5 | 9.0 | 4.79 | 11.8 | 8.7 | 5.19 | 11.1 | 8.4 | 5.72 |
| 22 | 30 | 15.2 | 10.1 | 3.80 | 14.7 | 9.7 | 4.10 | 13.8 | 9.3 | 4.64 | 13.5 | 9.2 | 4.89 | 13.0 | 9.0 | 5.29 | 12.1 | 8.6 | 5.86 |
| 24 | 32 | 16.0 | 10.2 | 3.85 | 15.7 | 9.8 | 4.15 | 14.7 | 9.4 | 4.73 | 14.4 | 9.3 | 4.93 | 13.7 | 9.1 | 5.36 | 13.0 | 8.9 | 5.98 |

Symbols:
AFR: Air flow rate ($m^3$/min.)
BF : By pass factor
EWB: Entering wet bulb temp. (℃WB)
EDB: Entering dry bulb temp. (℃DB)
TC : Total cooling capacity (kW)
SHC: Sensible heat capacity (kW)
PI : Power input (kW)
(Comp.+indoor+outdoor fan motor).

Caution
TC and SHC are shown by kW.

Notes:
1. Ratings shown are net capacities which include a deduction for indoor fan motor heat.
2. ▭ shows rated capacities.
3. SHC is based on each EWB and EDB.
SHC'=SHC correction for other dry bulb.(DB')
=0.02xAFRx(1-BF)x(DB'-EDB)
Add SHC' to SHC.
4. Direct interpolation is permissible.
Do not extrapolate.
5. Capacities are based on the following conditions.
Corresponding refrigerant piping length :
7.5m at 220V or 380V.
Level difference :0m
6. Air flow rate and (BF) are taburated below.

| | FHC | FH | FDMG |
|---|---|---|---|
| AFR | 33 | 38 | 42 |
| (BF) | (0.07) | (0.13) | (0.12) |

7. Add the following correction to power input of each model.

| | FHC | FH | FDMG |
|---|---|---|---|
| POWER SUPPLY | 0.00 | 0.04 | 0.05 |

3D052746A

## FHC48NUV1 / FH48NUV1 / FDMG48NUV1 + R48NUY1

Cooling Capacity (50Hz)

| INDOOR | | Outdoor temperature (℃DB) | | | | | | | | | | | | | | | | | |
|---|---|---|---|---|---|---|---|---|---|---|---|---|---|---|---|---|---|---|---|
| EWB (℃) | EDB (℃) | 21 | | | 25 | | | 32 | | | 35 | | | 40 | | | 46 | | |
| | | TC | SHC | PI | TC | SHC | PI | TC | SHC | PI | TC | SHC | PI | TC | SHC | PI | TC | SHC | PI |
| 14 | 20 | 13.3 | 10.3 | 3.99 | 12.9 | 10.0 | 4.51 | 12.3 | 9.7 | 4.87 | 12.1 | 9.6 | 5.18 | 11.6 | 9.6 | 5.69 | 11.0 | 9.3 | 6.22 |
| 16 | 22 | 14.1 | 10.4 | 4.08 | 13.7 | 10.1 | 4.54 | 13.1 | 9.8 | 4.93 | 12.9 | 9.8 | 5.27 | 12.3 | 9.7 | 5.76 | 11.7 | 9.3 | 6.31 |
| 18 | 25 | 14.9 | 10.7 | 4.20 | 14.6 | 10.3 | 4.59 | 14.0 | 10.2 | 5.05 | 13.7 | 10.0 | 5.41 | 13.1 | 9.8 | 5.87 | 12.4 | 9.6 | 6.45 |
| 19 | 27 | 15.4 | 10.9 | 4.27 | 15.0 | 10.3 | 4.64 | 14.4 | 10.2 | 5.15 | 14.1 | 10.1 | 5.49 | 13.5 | 9.9 | 5.95 | 12.8 | 9.7 | 6.55 |
| 19.5 | 27 | 15.7 | 10.9 | 4.27 | 15.3 | 10.3 | 4.64 | 14.7 | 10.2 | 5.15 | 14.4 | 10.2 | 5.49 | 13.8 | 10.0 | 5.95 | 13.1 | 9.8 | 6.55 |
| 22 | 30 | 16.9 | 10.9 | 4.36 | 16.4 | 10.6 | 4.70 | 15.7 | 10.3 | 5.30 | 15.4 | 10.2 | 5.60 | 14.9 | 10.1 | 6.06 | 14.2 | 9.9 | 6.73 |
| 24 | 32 | 17.9 | 11.2 | 4.42 | 17.4 | 10.7 | 4.76 | 16.7 | 10.4 | 5.42 | 16.3 | 10.3 | 5.66 | 15.8 | 10.2 | 6.14 | 15.1 | 10.2 | 6.85 |

Symbols:
AFR: Air flow rate ($m^3$/min.)
BF : By pass factor
EWB: Entering wet bulb temp. (℃WB)
EDB: Entering dry bulb temp. (℃DB)
TC : Total cooling capacity (kW)
SHC: Sensible heat capacity (kW)
PI : Power input (kW)
(Comp.+indoor+outdoor fan motor).

Caution
TC and SHC are shown by kW.

Notes:
1. Ratings shown are net capacities which include a deduction for indoor fan motor heat.
2. ▭ shows rated capacities.
3. SHC is based on each EWB and EDB.
SHC'=SHC correction for other dry bulb.(DB')
=0.02xAFR×(1−BF)×(DB'−EDB)
Add SHC' to SHC.
4. Direct interpolation is permissible.
Do not extrapolate.
5. Capacities are based on the following conditions.
Corresponding refrigerant piping length :
7.5m at 220V or 380V.
Level difference :0m
6. Air flow rate and (BF) are taburated below.

| | FHC | FH | FDMG |
|---|---|---|---|
| AFR (BF) | 33 (0.07) | 42 (0.13) | 42 (0.12) |

7. Add the following correction to power input of each model.

| | FHC | FH | FDMG |
|---|---|---|---|
| POWER SUPPLY | 0.00 | 0.01 | 0.06 |

3D052747B

## FDMG51NUV1 + R51NUY1

Cooling Capacity (50Hz)

| INDOOR | | Outdoor temperature (℃DB) | | | | | | | | | | | | | | | | | |
|---|---|---|---|---|---|---|---|---|---|---|---|---|---|---|---|---|---|---|---|
| EWB (℃) | EDB (℃) | 21 | | | 25 | | | 32 | | | 35 | | | 40 | | | 46 | | |
| | | TC | SHC | PI | TC | SHC | PI | TC | SHC | PI | TC | SHC | PI | TC | SHC | PI | TC | SHC | PI |
| 14 | 20 | 14.1 | 10.4 | 4.29 | 13.6 | 10.1 | 4.84 | 13.0 | 9.8 | 5.57 | 12.8 | 9.7 | 5.57 | 12.3 | 9.7 | 6.11 | 11.6 | 9.4 | 6.69 |
| 16 | 22 | 14.9 | 10.5 | 4.38 | 14.5 | 10.2 | 4.88 | 13.9 | 9.9 | 5.66 | 13.6 | 9.9 | 5.66 | 13.0 | 9.8 | 6.19 | 12.4 | 9.4 | 6.78 |
| 18 | 25 | 15.7 | 10.8 | 4.51 | 15.4 | 10.4 | 4.94 | 14.8 | 10.3 | 5.82 | 14.5 | 10.1 | 5.82 | 13.9 | 9.9 | 6.31 | 13.1 | 9.7 | 6.93 |
| 19 | 27 | 16.3 | 11.0 | 4.58 | 15.8 | 10.4 | 4.98 | 15.2 | 10.3 | 5.90 | 15.0 | 10.2 | 5.90 | 14.3 | 10.0 | 6.39 | 13.5 | 9.8 | 7.04 |
| 19.5 | 27 | 16.6 | 11.0 | 4.58 | 16.2 | 10.4 | 4.98 | 15.5 | 10.3 | 5.90 | 15.3 | 10.3 | 5.90 | 14.6 | 10.1 | 6.39 | 13.9 | 9.9 | 7.04 |
| 22 | 30 | 17.8 | 11.0 | 4.69 | 17.3 | 10.7 | 5.05 | 16.6 | 10.4 | 6.02 | 16.3 | 10.3 | 6.02 | 15.7 | 10.2 | 6.51 | 15.0 | 10.0 | 7.23 |
| 24 | 32 | 18.9 | 11.3 | 4.75 | 18.4 | 10.8 | 5.11 | 17.6 | 10.5 | 6.09 | 17.2 | 10.4 | 6.09 | 16.7 | 10.3 | 6.59 | 15.9 | 10.3 | 7.36 |

Symbols:
AFR: Air flow rate ($m^3$/min.)
BF : By pass factor
EWB: Entering wet bulb temp. (℃WB)
EDB: Entering dry bulb temp. (℃DB)
TC : Total cooling capacity (kW)
SHC: Sensible heat capacity (kW)
PI : Power input (kW)
(Comp.+indoor+outdoor fan motor).

Caution
TC and SHC are shown by kW.

Notes:
1. Ratings shown are net capacities which include a deduction for indoor fan motor heat.
2. ▭ shows rated capacities.
3. SHC is based on each EWB and EDB.
SHC'=SHC correction for other dry bulb.(DB')
=0.02xAFR×(1−BF)×(DB'−EDB)
Add SHC' to SHC.
4. Direct interpolation is permissible.
Do not extrapolate.
5. Capacities are based on the following conditions.
Corresponding refrigerant piping length :
7.5m at 220V or 380V.
Level difference :0m
6. Air flow rate and (BF) are taburated below.

| | FDMG |
|---|---|
| AFR (BF) | 42 (0.12) |

3D052751A

1

## FDMG56NUV1 + R56NUY1

Cooling Capacity [ 50Hz ]

| INDOOR | | Outdoor temperature (℃DB) | | | | | | | | | | | | | | | | | |
|---|---|---|---|---|---|---|---|---|---|---|---|---|---|---|---|---|---|---|---|
| EWB (℃) | EDB (℃) | 21 | | | 25 | | | 32 | | | 35 | | | 40 | | | 46 | | |
| | | TC | SHC | PI | TC | SHC | PI | TC | SHC | PI | TC | SHC | PI | TC | SHC | PI | TC | SHC | PI |
| 14 | 20 | 15.4 | 12.0 | 4.85 | 15.0 | 11.7 | 5.25 | 14.6 | 11.5 | 5.65 | 14.0 | 11.1 | 6.15 | 13.5 | 10.9 | 6.65 | 13.0 | 10.6 | 7.35 |
| 16 | 22 | 16.4 | 12.0 | 4.95 | 15.9 | 11.8 | 5.35 | 15.4 | 11.5 | 5.75 | 14.9 | 11.2 | 6.25 | 14.5 | 11.0 | 6.75 | 13.8 | 10.9 | 7.45 |
| 18 | 25 | 17.5 | 12.8 | 5.05 | 17.0 | 12.5 | 5.45 | 16.4 | 12.3 | 5.85 | 15.9 | 11.9 | 6.35 | 15.4 | 11.6 | 6.95 | 14.7 | 11.3 | 7.55 |
| 19 | 27 | 17.8 | 13.0 | 5.15 | 17.6 | 12.8 | 5.45 | 17.0 | 12.5 | 5.95 | 16.4 | 12.3 | 6.45 | 15.7 | 11.9 | 6.95 | 15.1 | 11.6 | 7.65 |
| 19.5 | 27 | 18.2 | 13.0 | 5.15 | 17.8 | 12.8 | 5.45 | 17.1 | 12.5 | 5.95 | 16.7 | 12.3 | 6.45 | 16.0 | 11.9 | 6.95 | 15.4 | 11.6 | 7.65 |
| 22 | 30 | 19.7 | 13.4 | 5.25 | 19.2 | 13.2 | 5.65 | 18.5 | 12.8 | 6.05 | 17.8 | 12.6 | 6.65 | 17.4 | 12.1 | 7.15 | 16.6 | 11.9 | 7.85 |
| 24 | 32 | 20.7 | 13.4 | 5.35 | 20.4 | 13.2 | 5.75 | 19.7 | 12.8 | 6.25 | 19.1 | 12.6 | 6.75 | 18.3 | 12.1 | 7.25 | 17.6 | 11.9 | 7.95 |

Symbols:

AFR: Air flow rate ($m^3$/min.)
BF : By pass factor
EWB: Entering wet bulb temp. (℃WB)
EDB: Entering dry bulb temp. (℃DB)
TC : Total cooling capacity (kW)
SHC: Sensible heat capacity (kW)
PI : Power input (kW)
(Comp.+indoor+outdoor fan motor).

Caution

TC and SHC are shown by kW.

Notes:

1. Ratings shown are net capacities which include a deduction for indoor fan motor heat.
2. ▭ shows rated capacities.
3. SHC is based on each EWB and EDB.
   SHC'=SHC correction for other dry bulb.(DB')
   =0.02xAFRx(1-BF)x(DB'-EDB)
   Add SHC' to SHC.
4. Direct interpolation is permissible.
   Do not extrapolate.
5. Capacities are based on the following conditions.
   Corresponding refrigerant piping length :
   7.5m at 220V or 380V.
   Level difference :0m
6. Air flow rate and (BF) are taburated below.

| | FDMG |
|---|---|
| AFR (BF) | 42 (0.12) |

3D052754A

## 9.2 Capacity correction factor by the length of refrigerant piping

**R18NUV1 / R21NUV1 / R26NUV1 / R26NUY1 / R30NUV1 / R30NUY1 / R36NUV1 / R36NUY1 / R42NUY1 / R48NUY1 / R51NUY1 / R56NUY1**

The cooling capacity of the unit has to be corrected in accordance with the length of refrigerant piping.
(The distance between the indoor unit and the outdoor unit)

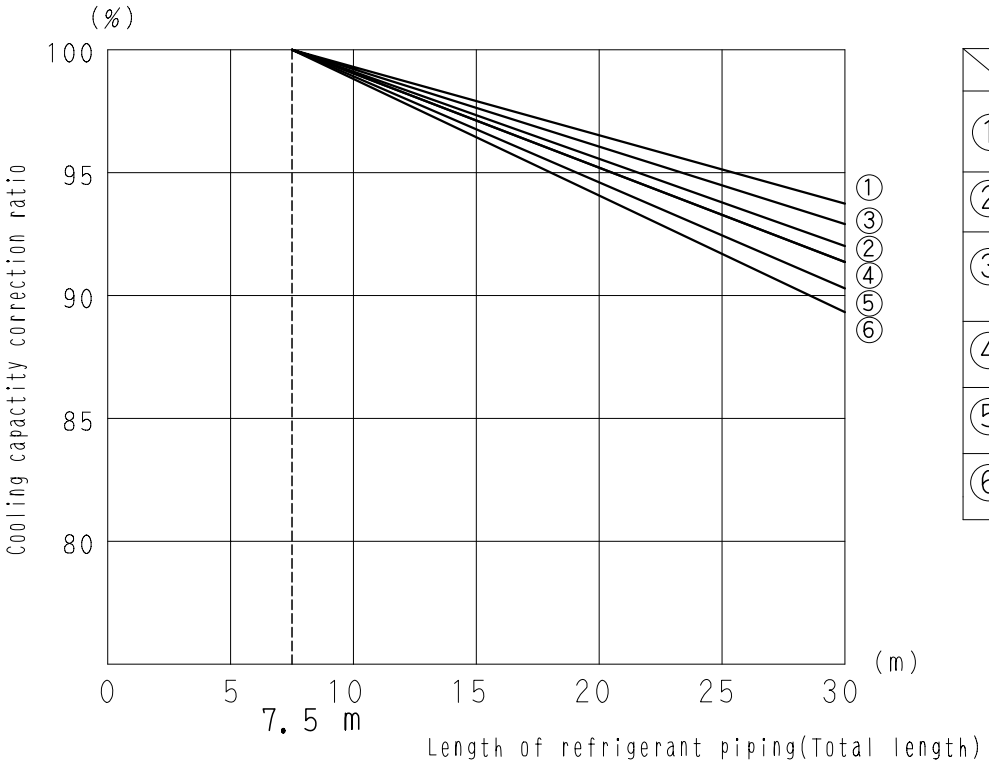


| | MODEL |
|---|---|
| ① | R18NUV1/2S(1)<br>R24NUV2S<br>R21NUV1 |
| ② | R26NUV/Y1<br>R30NUV/Y2S, R30NUV/Y1 |
| ③ | R36NUV1/2S<br>R36NUY1/2S<br>R13NUV2S(1) (Note 4) |
| ④ | R42NUY1/2S |
| ⑤ | R48, 51NUY1/2S |
| ⑥ | R56NUY1/2S |

Notes:

1. ——— Line: Correction ratio for cooling capacity

2. The correction ratio remains the same whether the outdoor unit is to be installed above or below the indoor unit.

3. Calculation method for cooling capacity
   Capacity = Cooling capacity obtained from the capacity table × cooling capacity correction ratio.

4. Maximum length of refrigerant piping for R13NUV2S(1) is 25 m.

3D052761D

# 10. Operation limits

## 10.1 Cooling only

**R18NUV1 / R21NUV1 / R26NUV1 / R26NUY1 / R30NUV1 / R30NUY1 / R36NUV1 / R36NUY1 / R42NUY1 / R48NUY1 / R51NUY1 / R56NUY1**

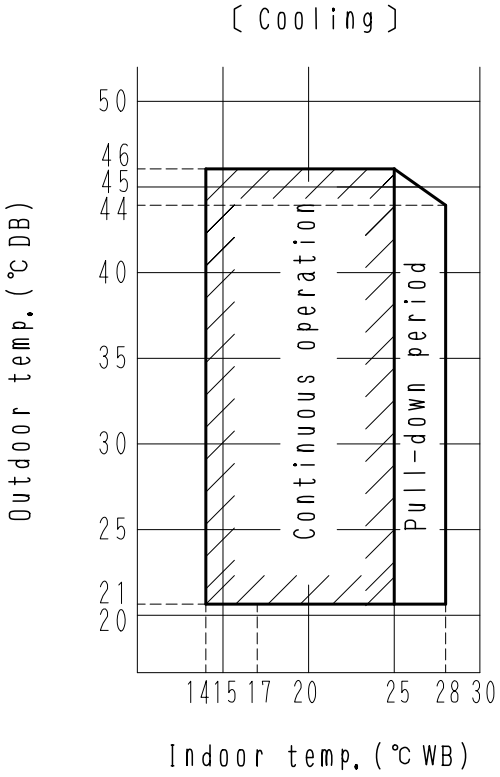


| Model Name | |
|---|---|
| INDOOR | OUTDOOR |
| FDMG71BV1S | R71LUV1S・Y1S |
| FDMG100BV1S | R100LUV1S・Y1S |
| FDMG125BV1S | R125LUY1S |
| FDMG140BV1S | R140LUY1S |

| Model Name | | | | |
|---|---|---|---|---|
| OUTDOOR | INDOOR | | | |
| | M.S.P DUCT | CASSETTE TYPE | CEILING | L.S.P DUCT |
| R30NUV1 | FDMG30NUV1 | FHC30NUV1 | FH30NUV1 | — |
| R30NUY1 | | | | |
| R36NUV1/15/2S | FDMG36NUV1/15/2S | FHC36NUV1/15/2S | FH36NUV1/15/2S | — |
| R36NUY1/15/2S | | | | |
| R42NUY1/15/2S | FDMG42NUV1/15/2S | FHC42NUV1/15/2S | FH42NUV1/15/2S | — |
| R48NUY1/15/2S | FDMG48NUV1/15/2S | FHC48NUV1/15/2S | FH48NUV1/15/2S | — |
| R51NUY1/15/2S | FDMG51NUV1/15/2S | — | — | — |
| R56NUY1/15/2S | FDMG56NUV1/15/2S | — | — | — |
| R18NUV2S | — | FHC18NUV2S | — | FDBT18NUV2S |
| R24NUV2S | — | FHC24NUV2S | FH24NUV2S | FDBT24NUV2S |
| R30NUV2S | FDMG30NUV2S | FHC30NUV2S | FH30NUV2S | FDBT30NUV2S |
| R30NUY2S | FDMG30NUV2S | FHC30NUV2S | FH30NUV2S | FDBT30NUV2S |
| R18NUV1/15 | — | FHC18NUV1/15 | — | FDBG18NUV1/15 |
| R21NUV1/15 | — | FHC21NUV1/15 | FH21NUV1/15 | FDBG21NUV1/15 |
| R26NUV1/15 | FDMG26NUV1/15 | FHC26NUV1/15 | FH26NUV1/15 | FDBG26NUV1/15 |
| R26NUY1/15 | FDMG26NUV1/15 | FHC26NUV1/15 | FH26NUV1/15 | FDBG26NUV1/15 |
| R13NUV2S | — | — | — | FDBT13NUV2S |
| R13NUV2S1 | — | — | FH13NUV2S | — |
| R18NUV2S1 | — | — | FH18NUV2S | — |

3D049550E

# 11. Fan performance

## 11.1 FDBG-NU

**FDBG18NUV1**

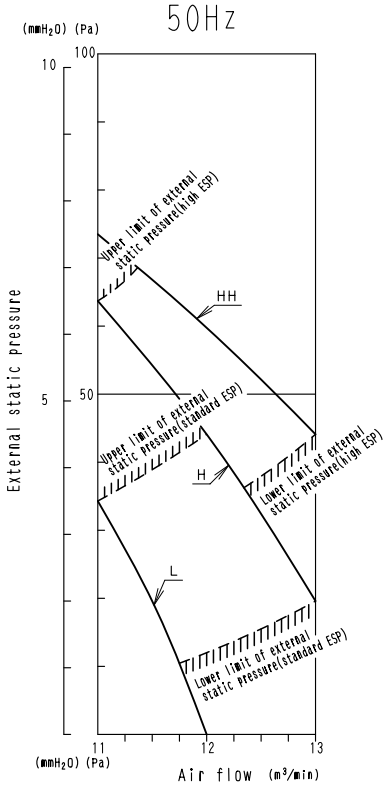


Notes:
1)Unit has three taps of "HH","H" and "L".
select "HH-H" to high ESP and "H-L"
to standard ESP.
It can select by connecting to the terminal
strip of unit.
(Show wiring diagram when connect.)

3D048561A

**FDBG21NUV1 / FDBG26NUV1**

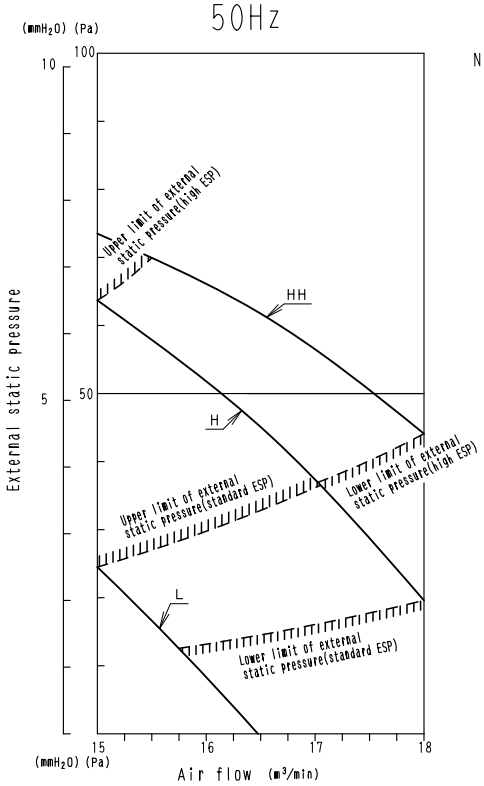


Notes:
1)Unit has three taps of "HH","H" and "L".
select "HH-H" to high ESP and "H-L"
to standard ESP.
It can select by connecting to the terminal
strip of unit.
(Show wiring diagram when connect.)

3D048562A

## 11.2 FDMG-NU

1

**FDMG26NUV1**

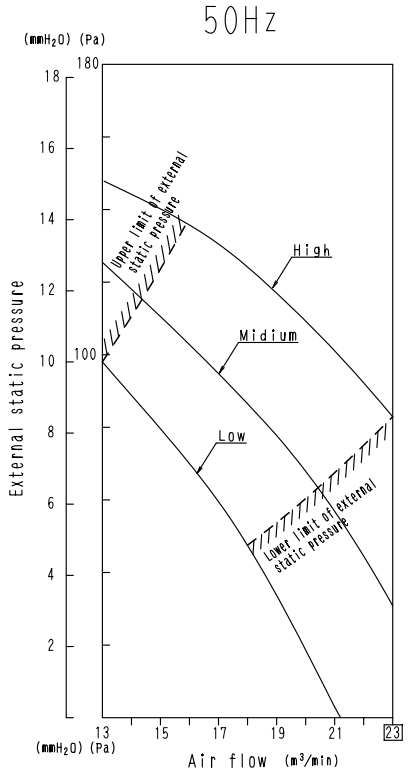


4D049493A

**FDMG30NUV1**

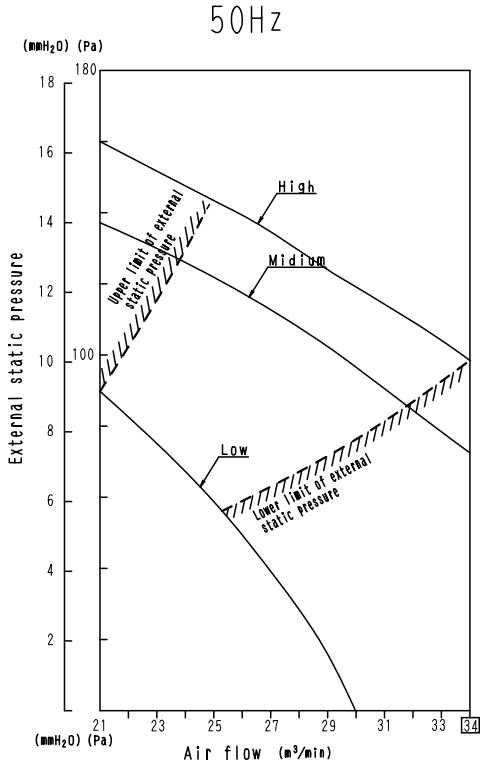


4D054411A

**FDMG36NUV1**

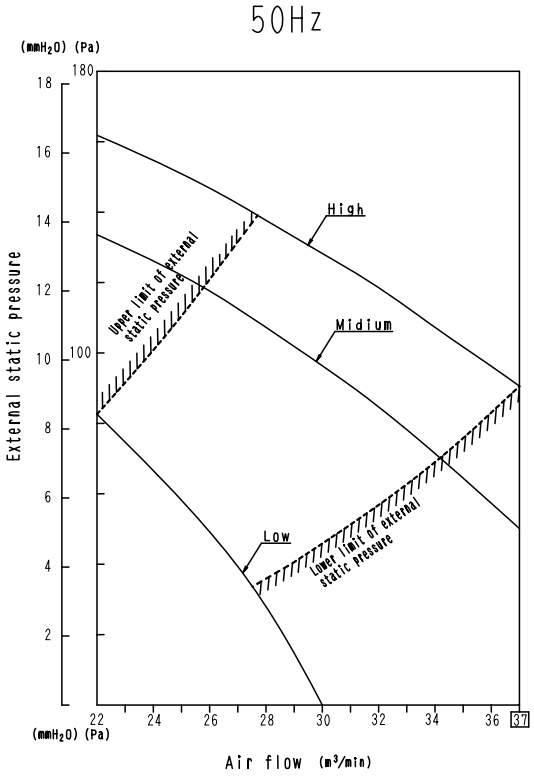


4D049488A

**FDMG42NUV1 / FDMG48NUV1**

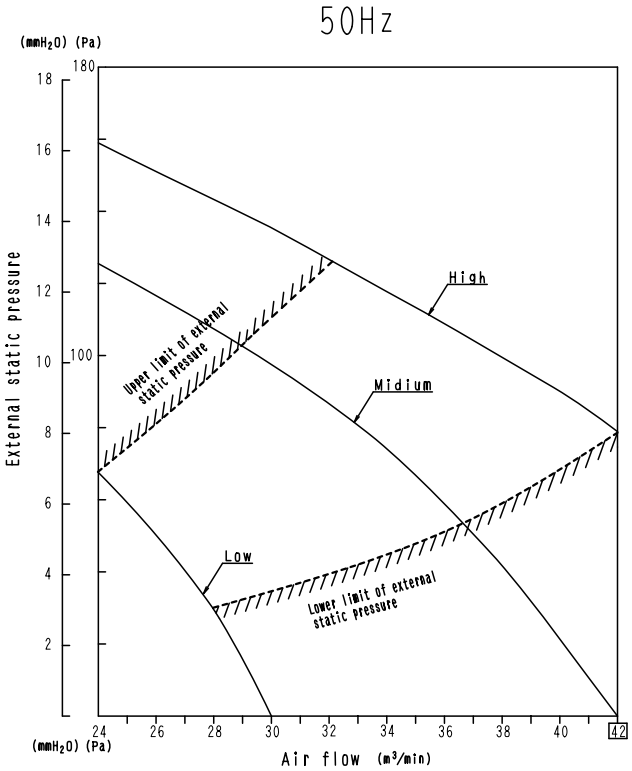


4D049489A

1

**FDMG51NUV1 / FDMG56NUV1**

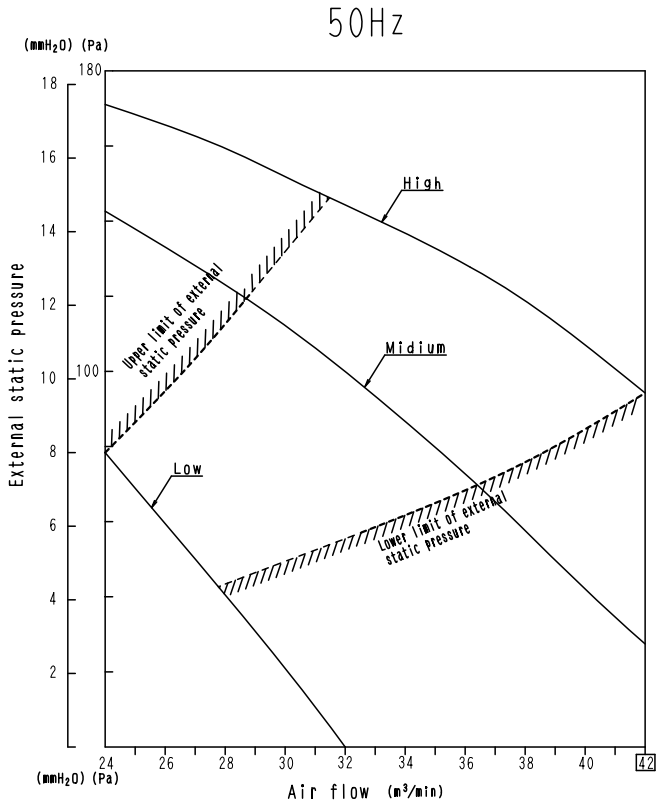


4D049490A

# 12. Sound level

## 12.1 Overall sound level

### 12.1.1 Indoor unit

dB(A)

| Model | 50Hz 220V | | 50Hz 240V | | Measuring location |
|---|---|---|---|---|---|
| | H | L | H | L | |
| FHC18NUV1 | 33 | 29 | 35 | 31 | 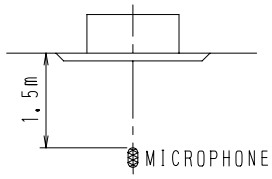  4D054296 |
| FHC21NUV1 | 35 | 30 | 37 | 32 | |
| FHC26NUV1 | 35 | 30 | 37 | 32 | |
| FHC30NUV1 | 39 | 34 | 41 | 36 | |
| FHC36NUV1 | 42 | 36 | 44 | 38 | |
| FHC42NUV1 | 42 | 36 | 44 | 38 | |
| FHC48NUV1 | 42 | 36 | 44 | 38 | |
| FH21NUV1 | 44 | 40 | 46 | 42 | 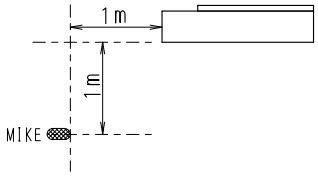  4D054245 |
| FH26NUV1 | 44 | 40 | 46 | 42 | |
| FH30NUV1 | 45 | 40 | 47 | 42 | |
| FH36NUV1 | 46 | 40 | 48 | 42 | |
| FH42NUV1 | 48 | 42 | 50 | 44 | |
| FH48NUV1 | 49 | 43 | 51 | 45 | |
| FDBG18NUV1 | 41 | 38 | 43 | 40 | 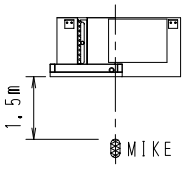  4D054358 |
| FDBG21NUV1 | 43 | 40 | 45 | 42 | |
| FDBG26NUV1 | 43 | 40 | 45 | 42 | |
| FDMG26NUV1 | 42 | 38 | 43 | 39 | 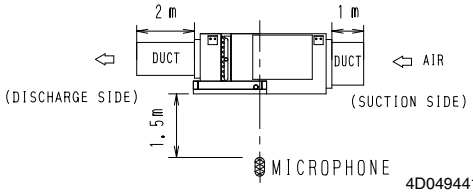  4D049441A |
| FDMG30NUV1 | 44 | 36 | 45 | 39 | |
| FDMG36NUV1 | 45 | 37 | 46 | 40 | |
| FDMG42NUV1 | 46 | 37 | 47 | 40 | |
| FDMG48NUV1 | 46 | 37 | 47 | 40 | |
| FDMG51NUV1 | 47 | 37 | 48 | 39 | |
| FDMG56NUV1 | 47 | 37 | 48 | 39 | |

**Note:** Operation sound is measured in an anechoic chamber.
Sound level will vary depending on a range of factors such as the construction (acoustic absorption coefficient) of the particular room in which the equipment installed.

## 12.1.2 Outdoor unit

dB(A)

| Model | 50Hz 220V | 50Hz 240V | Measuring location |
|---|---|---|---|
| R18NUV1 | 49 | 50 | 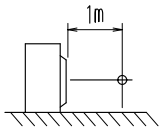  4D054355 |
| R21NUV1 | 54 | 55 | |
| R26NUV1 | 57 | 57 | 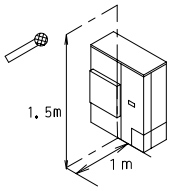  4D054333A |
| R30NUV1 | 57 | 57 | |
| R36NUV1 | 55 | 56 | |
| **Model** | **50Hz 380V** | **50Hz 415V** | |
| R26NUY1 | 57 | 57 | |
| R30NUY1 | 57 | 57 | |
| R36NUY1 | 55 | 56 | |
| R42NUY1 | 57 | 58 | |
| R48NUY1 | 59 | 60 | |
| R51NUY1 | 59 | 60 | |
| R56NUY1 | 56 | 58 | 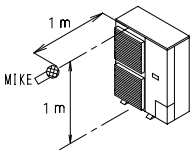  4D049423B |

**Note:** Operation sound is measured in an anechoic chamber.
Sound level will vary depending on a range of factors such as the construction (acoustic absorption coefficient) of the particular room in which the equipment installed.

## 12.2 Octave band level

### 12.2.1 Indoor unit

**FHC18NUV1**

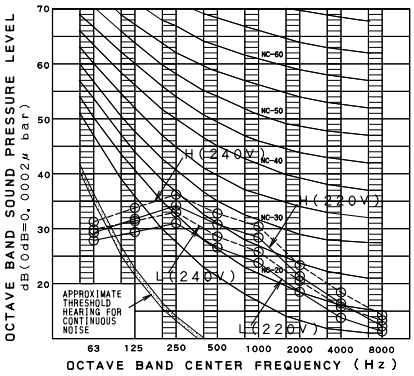


4D054296

**FHC21NUV1 / FHC26NUV1**

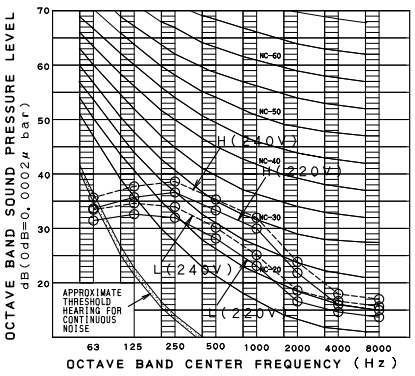


4D054293

**FHC30NUV1**

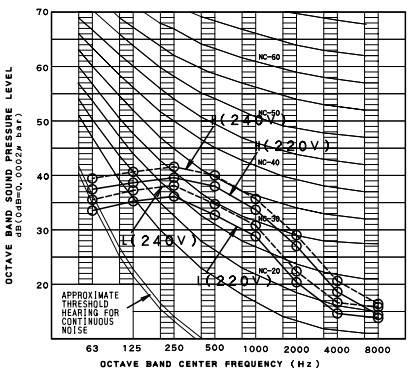


4D054294A

**FHC36NUV1 / FHC42NUV1 / FHC48NUV1**

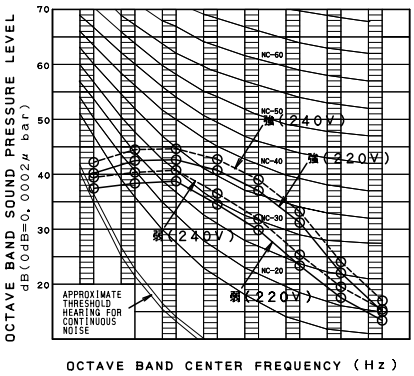


4D052541A

**FH21NUV1 / FH26NUV1**

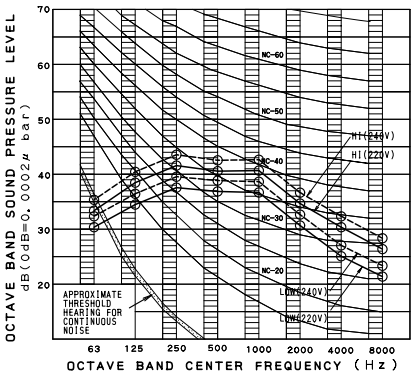


4D054245

**FH30NUV1**

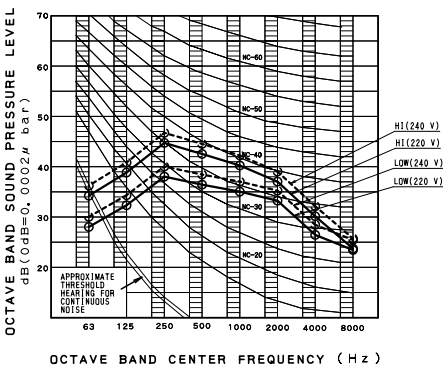


4D064933

**FH36NUV1**

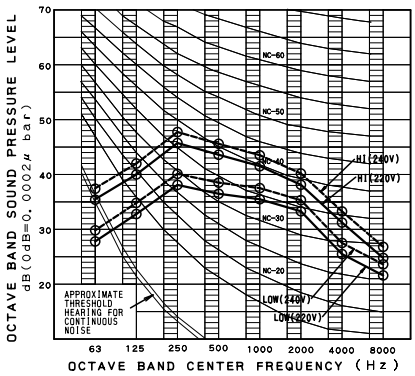


4D052455

**FH42NUV1**

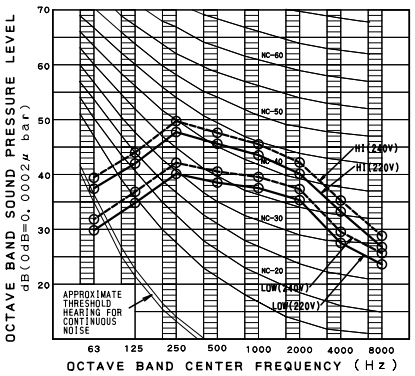


4D052456

**FH48NUV1**

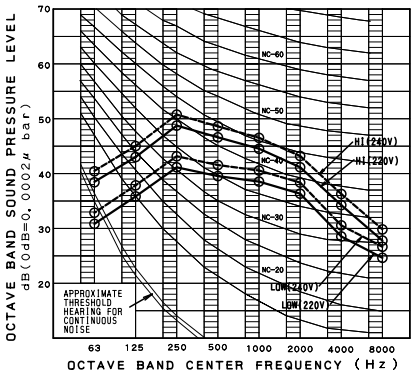


4D052458

**Note:**

○———○ 220V

○- - - -○ 240V

**FDBG18NUV1**

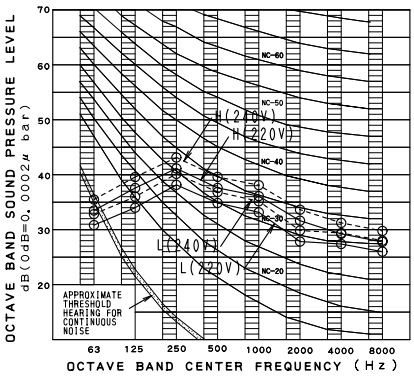


4D054358

**FDBG21NUV1 / FDBG26NUV1**

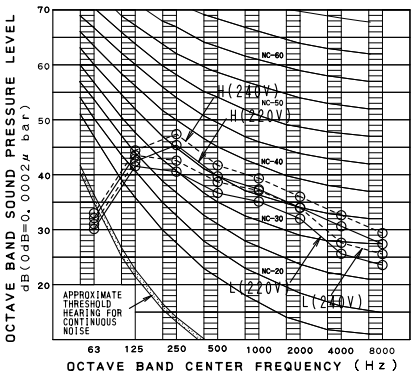


4D054357A

**FDMG26NUV1**

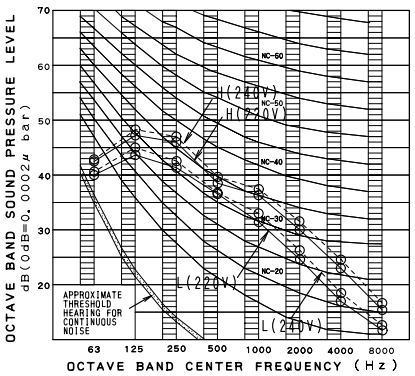


4D049441A

**FDMG30NUV1**

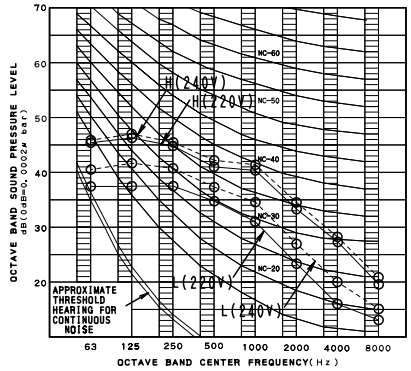


4D054412A

**FDMG36NUV1**

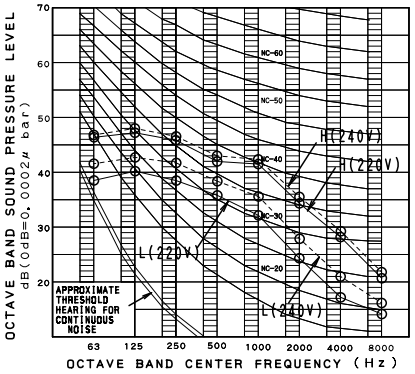


4D049427B

**FDMG42NUV1 / FDMG48NUV1**

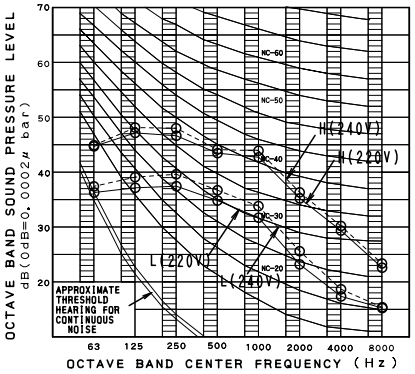


4D049431B

**FDMG51NUV1 / FDMG56NUV1**

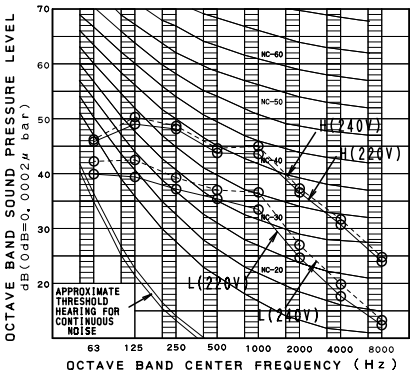


4D049433B

**Note:** Power source (Outdoor unit)

○———○ 220V

○- - - -○ 240V

## 12.2.2 Outdoor unit

**R18NUV1**

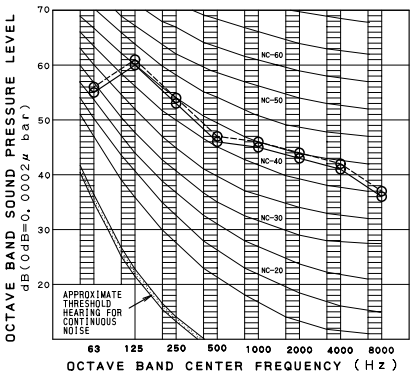


4D054355

**R21NUV1**

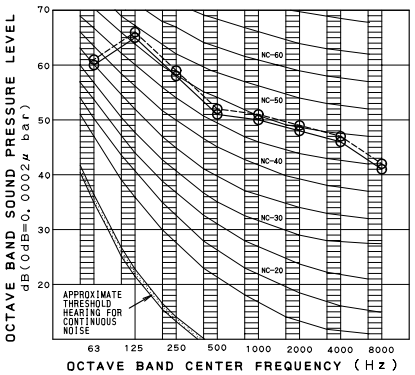


4D054356

**R26NUV1 / R26NUY1**
**R30NUV1 / R30NUY1**

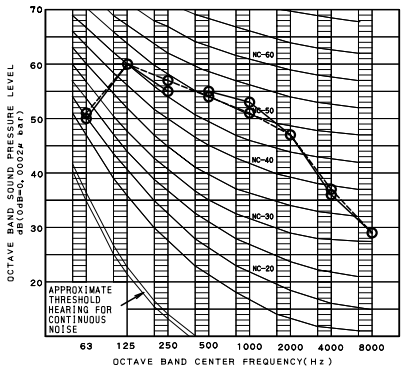


4D054333A

**R36NUV1 / R36NUY1**

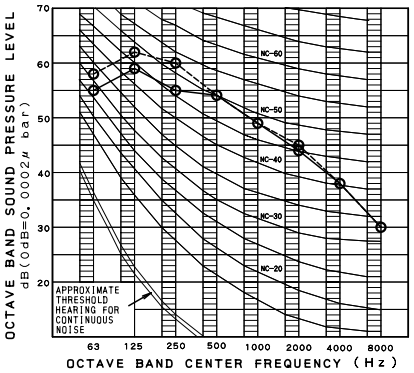


4D052428

**R42NUY1**

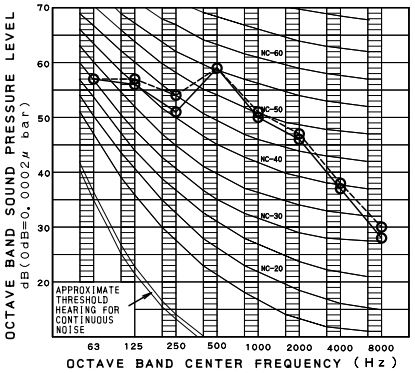


4D052429

**R48NUY1 / R51NUY1**

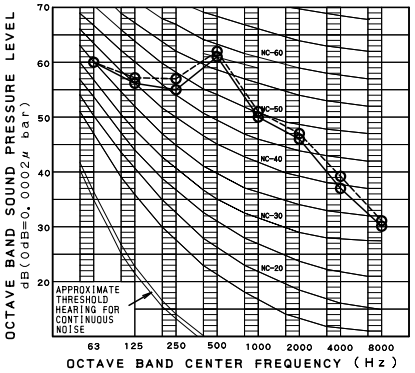


4D052430

**R56NUY1**

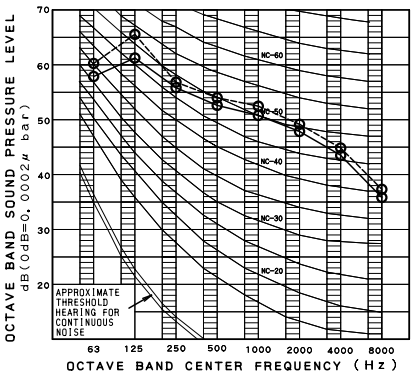


4D049423B

**Note:** Power source (Outdoor unit)

○———○ V1 : 220V, Y1 : 380V
○- - - -○ V1 : 240V, Y1 : 415V

# Part 2

# Installation of indoor / outdoor unit



1. Indoor unit .....72
   1.1 FHC-NUV1 .....72
   1.2 FH-NUV1 .....96
   1.3 FDBG-NUV1 .....112
   1.4 FDMG-NUV1 .....117
2. Outdoor unit .....124
   2.1 R18NUV1 / R21NUV1 .....124
   2.2 R26NUV1 / R26NUY1 / R30NUV1 / R30NUY1 / R36NUV1 / R36NUY1 / R42NUY1 / R48NUY1 / R51NUY1 / R56NUY1 .....129

# 1. Indoor unit

## 1.1 FHC-NUV1

### 1.1.1 Names and functions of parts

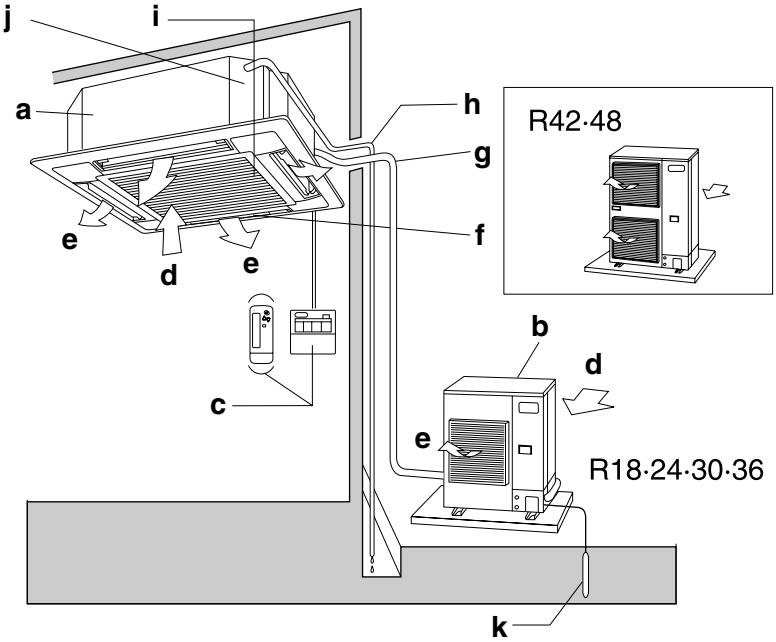


| | |
|---|---|
| a | Indoor unit |
| b | Outdoor unit |
| c | Remote controller |
| d | Air flow Inlet |
| e | Air flow outlet |
| f | Air flow flap (at air flow outlet) |
| g | Refrigerant piping, connection electric wire |
| h | Drain pipe |
| i | Air flow inlet<br>The built-in air filter removes dust and dirt. |
| j | Drain pumping out device(built-in)<br>Drains water removed from the room during cooling. |
| k | Ground wire<br>Wire to ground from the outdoor unit to prevent electrical shocks. |

3PN07217-2C

### 1.1.2 Installation

DAIKIN

| | | | |
|---|---|---|---|
| FHC18NUV1<br>FHC21NUV1<br>FHC26NUV1<br>FHC30NUV1 | FHC36NUV1<br>FHC42NUV1<br>FHC48NUV1 | SPLIT SYSTEM Air Conditioner | Installation manual |

2

## CONTENTS


1. SAFETY CONSIDERATIONS ..... 1
2. BEFORE INSTALLATION ..... 3
3. SELECTING INSTALLATION SITE ..... 5
4. PREPARATIONS BEFORE INSTALLATION ..... 6
5. INDOOR UNIT INSTALLATION ..... 8
6. REFRIGERANT PIPING WORK ..... 10
7. DRAIN PIPING WORK ..... 11
8. WIRING EXAMPLE ..... 14
9. ELECTRIC WIRING WORK ..... 15
10. FIELD SETTINGS ..... 18
11. INSTALLATION OF THE DECORATION PANEL ..... 19
12. TEST OPERATION ..... 20
13. WIRING DIAGRAM ..... 23
14. OUTDOOR UNIT INSTALLATION ..... 25


## 1. SAFETY CONSIDERATIONS

Please read these “SAFETY CONSIDERATIONS” carefully before installing air conditioning equipment and be sure to install it correctly. After completing the installation, make sure that the unit operates properly during the start-up operation. Please instruct the customer on how to operate the unit and keep it maintained. Also, inform customers that they should store this installation manual along with the operation manual for future reference.

After completing installation, conduct a trial operation to check for faults and explain to the customer how to operate the air conditioner and take care of it with the aid of operation manual. Ask the customer to store the installation manual along with the operation manual for future reference.

This air conditioner comes under the term “appliances not accesible to the general public”.

In a domestic environment this product may cause radio interference in which case the user may be required to take adequate measures.

Meaning of warning and caution symbols.

**WARNING**
Failure to follow these instructions properly may result in personal injury or loss of life.

**CAUTION**
Failure to observe these instructions properly may result in property damage or personal injurly, which may be serious depending on the circumstances.

**WARNING**

- Ask your dealer or qualified personal to carry out installation work.
  Do not attempt to install the air conditioner yourself. Improper installation may result in water leakage, electric shocks or fire.
- Perform installation work in accordance with this installation manual.
  Improper installation may result in water leakage, electric shocks or fire.
- Be sure to use only the specified accessories and parts for installation work.
  Failure to use the specified parts may result in water leakage, electric shocks, fire or the unit falling.
- Install the air conditioner on a foundation strong enough to withstand the weight of the unit.
  A foundation of insufficient strength may result in the equipment falling and causing injuries.
- Consult your local dealer regarding what to do in case of refrigerant leakage, when the air coditioner is to be installed in a small room, it is necessary to take proper measures so that the amount of any leaked refrigerant does not exceed the concentration limit in the event of leakage. Otherwise, this may lead to an accident due to oxygen depletion.
- Carry out the specified installation work after taking into account strong winds, typhoons or earthquakes.
  Improper installation work may result in the equipment falling and causing accidents.

- Make sure that a separate power supply circuit is provided for this unit and that all electrical work is carried out by qualified personnel according to local laws, regulations and this installation manual.
  An insufficient power supply capacity or improper electrical construction may lead to electric shocks or fire.
- Make sure that all wiring is secured,the specified wires are used, and that there is no strain on the terminal connections or wires. Improper connections or securing of wires may result in abnormal heat build-up or fire.
- When wiring the power supply and connecting the wiring between the indoor and outdoor units, position the wires so that the switch box cover can be securely fastened.
  Improper positioning of the switch box cover may result in electric shocks, fire or the terminals overheating.
- If the refrigerant gas leaks during installation, ventilate the area immediately.
  Toxic gas may be produced if the refrigerant gas comes into contact with fire.
- After completing the installation work, check that the refrigerant gas does not leak.
  Toxic gas may be produced if the refrigerant gas leaks into the room and comes into contact with a source of fire, such as a fan heater, stove or cooker.
- Be sure to switch off the unit before touching any electrical parts.
- Do not directly touch refrigerant that has leaked from refrigerant pipes or other areas, as there is a danger of frostbite.
- Do not allow children to climb on the outdoor unit and avoid placing objects on the unit.
  Injury may result if the unit becomes loose and falls.

**⚠ CAUTION**

- Ground the air conditioner.
  Do not connect the ground wire to gas or water pipes, lightning conductor or a telephone ground wire.
  Incomplete grounding may result in electric shocks.
- Be sure to install an earth leakage breaker.
  Failure to install an earth leakage breaker may result in electric shocks.
- While following the instructions in this installation manual, install drain piping in order to ensure proper drainage and insulate piping in order to prevent condensation.
  Improper drain piping may result in water leakage and property damage.
- Make sure to provide for adequate measure in order to prevent that the outdoor unit be used as a shelter by small animals.
- Small animals making contact with electrical parts can cause malfunctions, smoke or fire. Please instruct the customer to keep the area around the unit clean.
- Install in a machine room that is free of moisture. The unit is designed for indoor use.
- Install the indoor and outdoor units, power cord and connecting wires at least 1 meter away from televisions or radios in order to prevent image interference or noise.
  (Depending on the radio waves, a distance of 1 meter may not be sufficient enough to eliminate the noise.)
- Remote controller (wireless kit) transmitting distance can result shorter than expected in rooms with electronic fluorescent lamps. (inverter or rapid start types)
  Install the indoor unit as far away from fluorescent lamps as possible.
- Do not install the air conditioner in the following locations:
  (a) where a mineral oil mist or an oil spray or vapor is produced, for example in a kitchen
  Plastic parts may deteriorate and fall off or result in water leakage.
  (b) where corrosive gas, such as sulfurous acid gas, is produced
  Corroding copper pipes or soldered parts may result in refrigerant leakage.
  (c) near machinery emitting electromagnetic waves
  Electromagnetic waves may disturb the operation of the control system and result in a malfunction of the equipment.
  (d) where flammable gases may leak, where there are carbon fiber or ignitable dust suspensions in the air, or where volatile flammables such as thinner or gasoline are handled.
  Operating the unit in such conditions may result in fire.
- Disposal requirements
  Dismantling of the unit, treatment of the refrigerant, of the oil and of other parts must be done in accordance with relevant local and national legislation.

## 2. BEFORE INSTALLATION

- Be sure to check the type of refrigerant to be used before installing the unit. (Using an incorrect refrigerant will prevent normal operation of the unit.)
- The accessories needed for installation must be retained in your custody until the installation work is completed. Do not discard them!
- Decide upon a line of transport.
- Leave the unit inside its packaging while moving, until reaching the installation site. Where unpacking is unavoidable, use a sling of soft material or protective plates together with a rope when lifting, to avoid damage or scratches to the unit.
- When selecting installation site, refer to the paper pattern.
- For the installation of an outdoor unit, refer to the installation manual attached to the outdoor unit.
- Do not use the unit in locations with high salt content in the air such as beachfront property, locations where the voltage fluctuates such as factories, in automobiles or marine vessels.

### 2-1 ACCESSORIES

**Check the following accessories are included with your unit.**

| Name | 1) Drain hose | 2) Clamp | 3) Washer for hanging bracket | 4) Clamp | 5) Paper pattern for installation |
|---|---|---|---|---|---|
| Quantity | 1 pc. | 1 pc. | 8 pcs. | 4 pcs. | 1 pc. |
| Shape | | | | | Also used as packing material 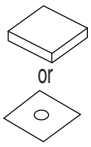  a corrugated sheet |

| Name | 6) Screws (M5) | 7) Washer fixing plate | Insulation for fitting | Sealing pad | | (Other) |
|---|---|---|---|---|---|---|
| Quantity | 3 pcs. | 4 pcs. | 1 each | 1 each | 2 pcs. | |
| Shape | For paper pattern for installation | | 8) for gas pipe 9) for liquid pipe | 10) Large 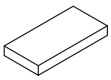 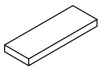 11) Medium | 12) Small | • Installation manual<br>• Operation manual |

### 2-2 OPTIONAL ACCESSORIES

- The optional decoration panel and remote controller are required for this indoor unit. (Refer to Table 1, 2)

Table 1

| Model | Optional decoration panel | |
|---|---|---|
| FHC18·21·26·30·36·42·48NUV1 | Color | White |
| | BYC125K-W | |

- These are two types of remote controllers: wired and wireless. Select a remote controller from Table 2 according to customer request and install in an appropriate place.

Table 2

| Remote controller type | Cooling only type |
|---|---|
| Wired type | BRC1C61 |
| Wireless type | BRC7C613W |

**NOTE**

- If you wish to use a remote controller that is not listed in “Table 2” on page 4, select a suitable remote controller after consulting catalogs and technical materials.

## FOR THE FOLLOWING ITEMS, TAKE SPECIAL CARE DURING CONSTRUCTION AND CHECK AFTER INSTALLATION IS FINISHED.

### a. Items to be checked after completion of work

| Items to be checked | If not properly done, what is likely to occur | Check |
|---|---|---|
| Is the indoor unit fixed firmly? | The unit may drop, vibrate or make noise. | |
| Is the gas leak test finished? | It may result in insufficient cooling. | |
| Is the unit fully insulated? | Condensate water may drip. | |
| Does drainage flow smoothly? | Condensate water may drip. | |
| Does the power supply voltage correspond to that shown on the name plate? | The unit may malfunction or the components burn out. | |
| Are wiring and piping correct? | The unit may malfunction or the components burn out. | |
| Is the unit safely grounded? | Dangerous at electric leakage. | |
| Is wiring size according to specifications? | The unit may malfunction or the components burn out. | |
| Is something blocking the air outlet or inlet of either the indoor or outdoor units? | It may result in insufficient cooling. | |
| Are refrigerant piping length and additional refrigerant charge noted down? | The refrigerant charge in the system is not clear. | |

### b. Items to be checked at time of delivery

Also review the “SAFETY CONSIDERATIONS”

| Items to be checked | Check |
|---|---|
| Did you explain about operations while showing the instruction manual to your customer? | |
| Did you hand the instruction manual over to your customer? | |

### c. Points for explanation about operations

The items with ⚠ WARNING and ⚠ CAUTION marks in the instruction manual are the items pertaining to possibillties for bodily injury and material damage in addition to the general usage of the product. Accordingly, it is necessary that you make a full explanation about the described contents and also ask your customers to read the instruction manual.

### 2-3 NOTE TO THE INSTALLER

Be sure to instruct customers how to properly operate the unit (especially cleaning filters, operating different functions and adjusting the temperature) by having them carry out operations themselves while looking at the manual.



## 3. SELECTING INSTALLATION SITE

Please attach additional thermal insulation material to the unit body when it is believed that the relative humidity in the ceiling exceeds 80%. Use glass wool, polyethylene foam, or similar with a thickness of 10 mm or more as thermal insulation material.
For this unit, you are able to select air flow direction.
To enable the discharge of air in 2 or 3 directions, it is necessary to purchase the optional blocking pad kit.

**(1) Select an installation site where the following conditions are fulfilled and that meets your customer's approval.**

- Where optimum air distribution can be ensured.
- Where nothing blocks air passage.
- Where condensate can be properly drained.
- Where the ceiling is strong enough to bear the indoor unit weight.
- Where the false ceiling is not noticeably on an incline.
- Where sufficient clearance for maintenance and service can be ensured.
- Where there is no risk of flammable gas leakage.
- Where piping between indoor and outdoor units is possible within the allowable limit. (Refer to the installation manual for the outdoor unit.)

**⚠ CAUTION**

- Any vents, light fixtures, or other appliances which may disturb the airflow might cause the top side to become dirty if located too nearby, so follow the figure below when installing.
- Keep indoor unit, outdoor unit, power supply wiring and transmission wiring at least 1 meter away from televisions and radios. This is to prevent image interference and noise in those electrical appliances. (Noise may be generated depending on the conditions under which the electric wave is generated, even if 1 meter is kept.)

**(2) Ceiling height**

- Install this unit where the height of bottom panel is more than 2.5 m so that the user cannot easily touch.
- This indoor unit may be installed on ceilings up to 3.5 m in height. However, it becomes necessary to make field settings by remote controller and close the air outlet when installing the unit at a height over 2.7 m. Refer to the section entitled, 10. FIELD SETTING and the decoration panel installation manual.

**(3) Air flow direction**

Select the air flow directions best suited to the room and point of installation. (For air discharge in 2 or 3 directions, it is necessary to make field settings by remote controller and to close the air outlet(s). Refer to the installation manual of the optional blocking pad kit and the section entitled 10.FIELD SETTING)

[Air flow direction]

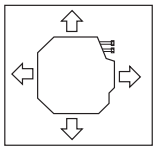

Air discharge in 4 directions

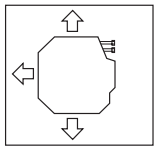

Air discharge in 3 directions

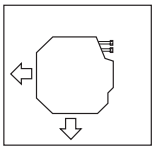

Air discharge in 2 directions

**(4) Use suspension bolts for installation. Check whether the ceiling is strong enough to support the weight of the unit or not. If there is a risk, reinforce the ceiling before installing the unit.**
(Installation pitch is maked on the paper pattern for installation. Refer to it to check for points requiring reinforcing.)

[Space required for installation]

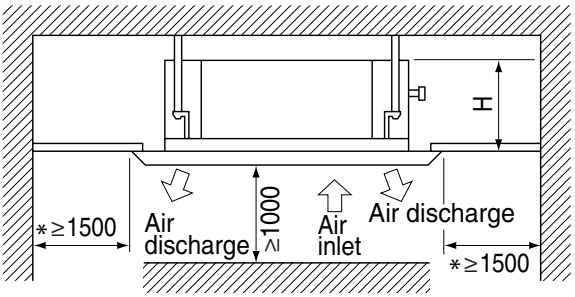


**Fig. 1**

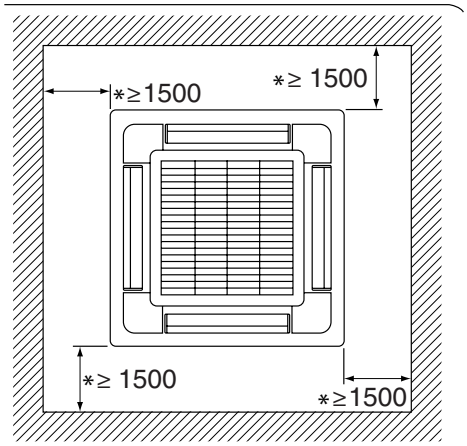


**Fig. 2**

**NOTE**
- Leave 200 mm or more space where marked with the *, on sides where the air outlet is closed.

| Model | H |
|---|---|
| FHC18·21·26NUV1 | 240 |
| FHC30·36·42·48NUV1 | 298 |

(unit:mm)

## 4. PREPARATIONS BEFORE INSTALLATION

**(1)** Relation of ceiling opening to unit and suspension bolt position

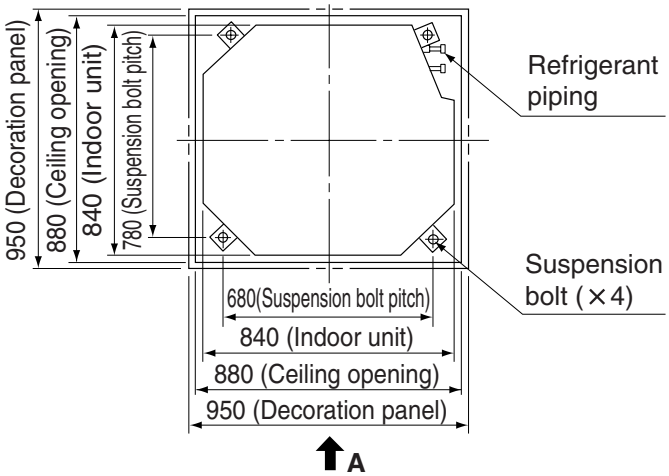


**Fig. 3**

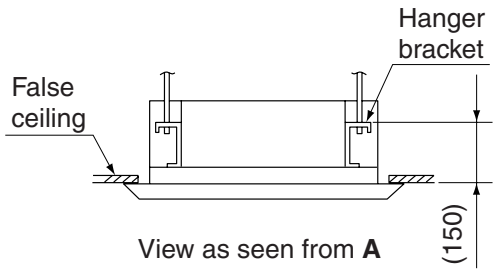


**Fig. 4**

(unit:mm)

■ **Installation is possible when ceiling opening dimensions is as follows**

- When installing the unit within the frame for fixing ceiling materials.

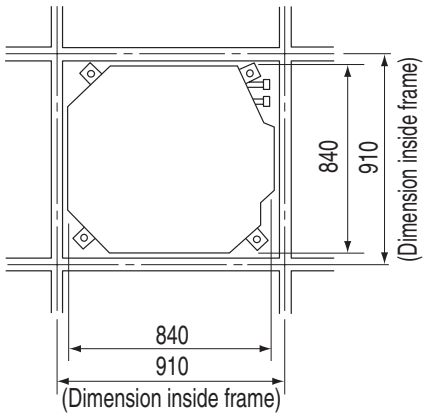


**Fig. 5**

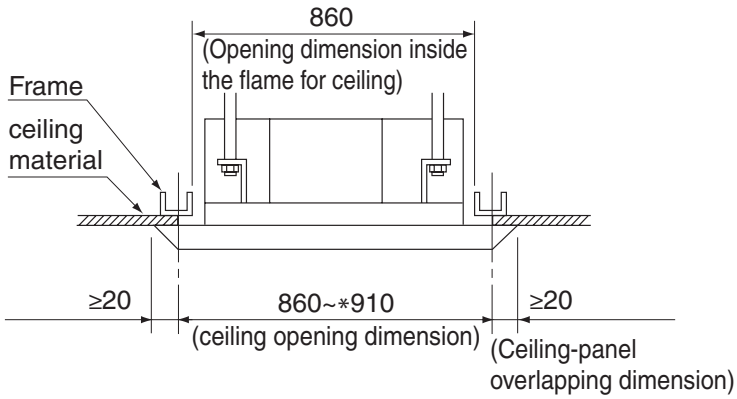


**Fig. 6**

**NOTE**

- Installation is possible with a ceiling dimension of 910 mm (marked with ∗). However, to achieve a ceiling-panel overlapping dimension of 20 mm, the spacing between the ceiling and the unit should be 35 mm or less. If the spacing between ceiling and the unit is over 35 mm, attach ceiling material to ■ part or recover the ceiling.

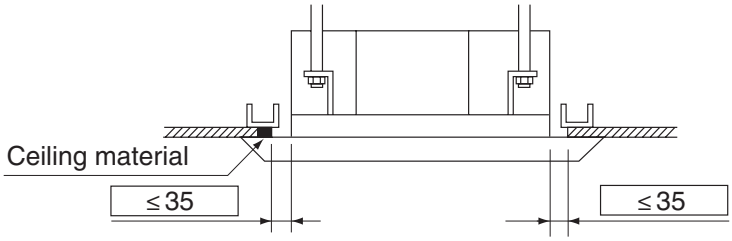


**Fig. 7**

**(2)** Make the ceiling opening needed for installation where applicable. (For existing ceilings)

- Refer to the paper pattern for installation (5) for ceiling opening dimensions.
- Create the ceiling opening required for installation. From the side of the opening to the casing outlet, implement the refrigerant and drain piping and wiring for remote controller (unnecessary for wireless type) and indoor-outdoor unit casing outlet. Refer to each PIPING or WIRING section.
- After making an opening in the ceiling, it may be necessary to reinforce ceiling beams to keep the ceiling level and to prevent it from vibrating. Consult the builder for details.

**(3)** Install the suspension bolts.
(Use either a M8~M10 size bolt)
Use a hole-in anchor for existing ceilings, and a sunken insert, sunken anchor or other field supplied parts for new ceilings to reinforce the ceiling to bear the weight of the unit.
Adjust clearance from the ceiling before proceeding further.

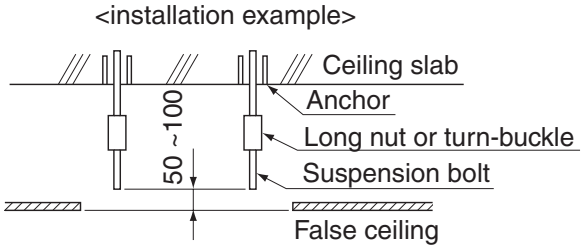


**Fig. 8**

(unit:mm)

**NOTE**

- All the above parts are field supplied.

## 5. INDOOR UNIT INSTALLATION

**Installing optional accessories (except for the decoration panel) before installing the indoor unit is easier. However, for existing ceilings, install fresh air inlet component kit and branch duct before installing the unit.**

As for the parts to be used for installation work, be sure to use the provided accessories and specified parts designated by our company.

<The two cushions provided on the top of the indoor unit serve to protect the floor from scratches or cracks when it is directly placed on the floor with the topside down. Be sure to remove the cushions before installation.>

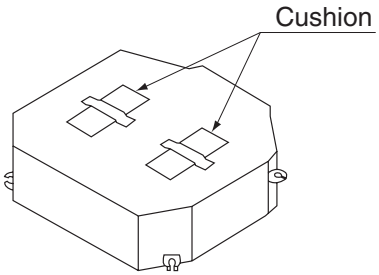


**Fig. 9**

**(1) Install the indoor unit temporarily.**

- Attach the hanger bracket to the suspension bolt. Be sure to fix it securely by using a nut and washer from the upper and lower sides of the hanger bracket.
  The washer fixing plate (7) will prevent the washer from falling.

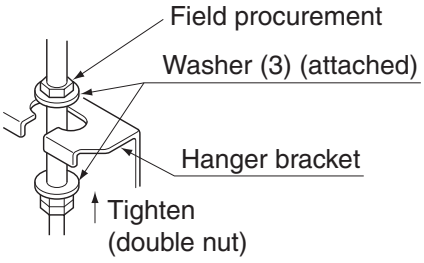


[Securing the hanger bracket]

**Fig. 10**

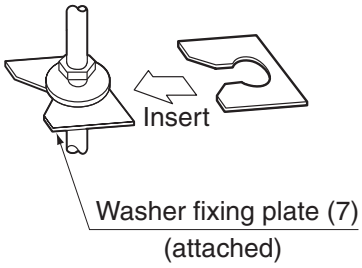


[Securing the washer]

**Fig. 11**

**(2) For new ceilings only.**

- Refer to the paper pattern for installation (5) for ceiling opening dimension.
  Consult the builder or carpenter for details.
- The center of the ceiling opening is indicated on the paper pattern for installation.
  The center of the unit is indicated on the label attached to the unit and on the paper pattern for installation.
- After removing the packaging material from the 4 corners of the paper pattern for installation (5), fix the paper pattern to the unit with screws (6) (×3).
- Ceiling height is shown on the side of the paper pattern for installation (5). Adjust the height of the unit according to this indication.

**Please perform one of the following, as the shape of the paper pattern for installation differs according to the model.**

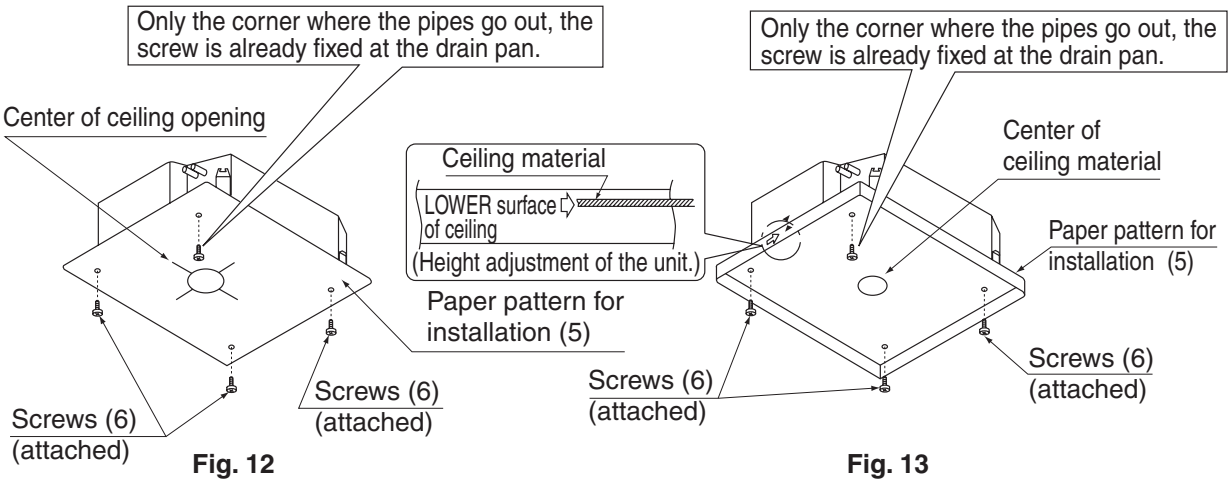


**Fig. 12** **Fig. 13**

[Installation of paper pattern for installation]

**<Ceiling work>**

**(3)** Adjust the unit to the right position for installation.
(Refer to **"4. PREPARATIONS BEFORE INSTALLATION-(1)"**.)

**(4)** Check the unit is horizontally level.
- The indoor unit is equipped with a built-in drain pump and float switch. At each of the unit's 4 corners, verify that it is level by using a water level or a water-filled vinyl tube.
(If the unit is tilted against condensate flow, the float switch may malfunction and cause water to drip.)

**(5)** Remove the washer fixing plate (7) used for preventing the washer from falling and tighten the upper nut.

**(6)** For new ceilings only.
- Remove the paper pattern for installation (5).

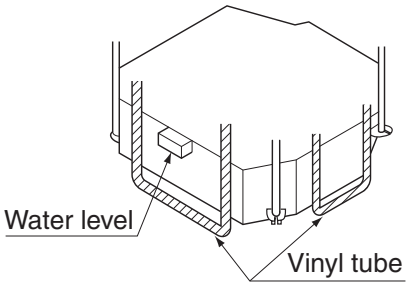


[Maintaining horizontality]

**Fig. 14**

**NOTE**
- Step 2 and 6 for new ceilings only.

## 6. REFRIGERANT PIPING WORK

<**For refrigerant piping of outdoor units, see theinstallation manual attached to the outdoor unit.**>
Execute heat insulation work completely on both sides of the gas piping and the liquid piping. Otherwise, a water leakage can result sometimes.
<Also, in cases where the temperature and humidity of the refrigerant piping sections might exceed 30°C or RH80 %, reinforce the refrigerant insulation. (20 mm or thicker) Condensation may form on the surface of the insulating material.>
Be sure to check the type of refrigerant to be used before doing any work. (Using an incorrect refrigerant will prevent normal operation of the unit.)

**CAUTION**

Do not allow anything other than the designated refrigerant to get mixed into the freezing cycle, such as air, etc. If any refrigerant gas leaks while working on the unit, ventilate the room thoroughly right away.

- Be sure to use both a spanner and torque wrench together, as shown in the drawing, when connecting or disconnecting pipes to/ from the unit. **(Refer to fig. 15)**
- Refer to “Table 3” for the dimensions of flare nut spaces.
- When connecting the flare nut, coat the flare part (both inside and outside) with ester oil or ether oil, rotate three or four times first, then screw in. **(Refer to fig. 16)**

**NOTE**
- Use the flare nut included with the unit main body.

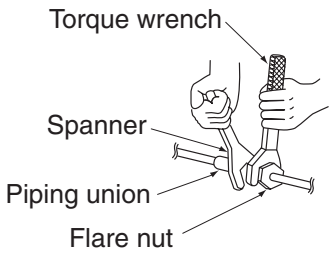


**Fig. 15**

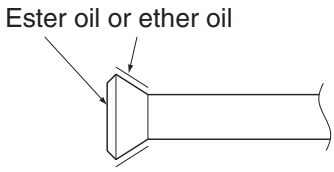


**Fig. 16**

Table 3

| Pipe size (mm) | Tightening torque | Flare dimensions A (mm) | Flare |
|---|---|---|---|
| ø 6.4 | 14.2 – 17.2N·m (144 – 176 kgf·cm) | 8.6 – 9.0 | 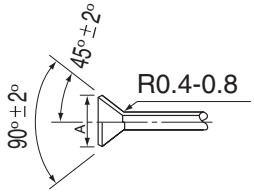  |
| ø 9.5 | 32.7 – 39.9N·m (333 – 407 kgf·cm) | 12.6 – 13.0 | |
| ø12.7 | 49.5 – 60.3N·m (504 – 616 kgf·cm) | 15.8 – 16.2 | |
| ø15.9 | 61.8 – 75.4N·m (630 – 770 kgf·cm) | 19.0 – 19.4 | |
| ø19.1 | 97.2 – 118.8N·m (990 – 1210 kgf·cm) | 23.3 – 23.7 | |

- Refer to “Table 3” to determine the proper tightening torque.

**CAUTION**

Overtightening may damage the flare and cause leaks.

2

— **Not recommendable but in case of emergency**

You must use a torque wrench but if you are obliged to install the unit without a torque wrench, you may follow the installation method mentioned below

**After the work is finished, make sure to check that there is no gas leak.**

When you keep on tightening the flare nut with a spanner, there is a point where the tightening torque suddenly increases. From that position, further tighten the flare nut the angle shown below:

| Pipe size (mm) | Further tightening angle | Recommended arm length of tool |
|---|---|---|
| ø6.4 (1/4”) | 60 to 90 degrees | Approx. 150mm |
| ø9.5 (3/8”) | 60 to 90 degrees | Approx. 200mm |
| ø12.7 (1/2”) | 30 to 60 degrees | Approx. 250mm |
| ø15.9 (5/8”) | 30 to 60 degrees | Approx. 300mm |
| ø19.1 (3/4”) | 20 to 35 degrees | Approx. 450mm |

- Make absolutely sure to execute heat insulation works on the pipe-connecting section after checking gas leakage by thoroughly studying the following figure and using the attached heat insulating materials for fitting (8) and (9). (Fasten both ends with the clamps (4).)
  **(Refer to fig. 17)**
- Wrap the sealing pad (11) only around the insulation for the joints on the gas piping side.
  **(Refer to fig. 17)**

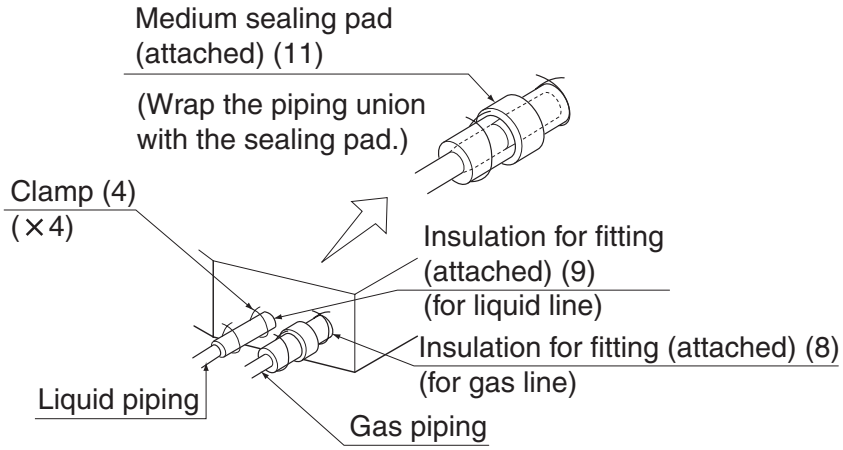


**Fig. 17**

## 7. DRAIN PIPING WORK

**(1)** Rig drain piping

- Lay pipes so as to ensure that drainage can occur with no problems.
- Employ a pipe with either the same diameter or with the diameter larger (excluding the raising section) than that of the connecting pipe (PVC pipe, nominal diameter 25 mm, outside diameter 32 mm).
- Keep the drain pipe short and sloping downwards at a gradient of at least 1/100 to prevent air pockets from forming.
- If the drain hose cannot be sufficiently set on a slope, execute the drain raising piping.
- To keep the drain hose from sagging, space hanging wires every 1 to 1.5 m.

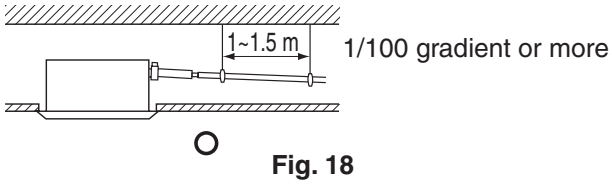


Fig. 18

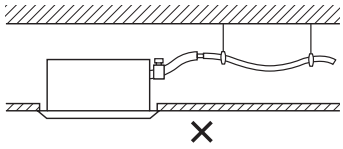


Fig. 19

- Use the attached drain hose (1) and clamp (2).
- Insert the drain hose into the drain socket up to the base, and tighten the clamp securely within the portion of a white tape of the hose-inserted tip. Tighten the clamp until the screw head is less than 4 mm from the hose.
- Wrap the attached sealing pad (10) over the clamp and drain hose to insulate.
- Make sure that heat insulation work is executed on the following 2 spots to prevent any possible water leakage due to dew condensation.
  - Indoor drain pipe
  - Drain socket

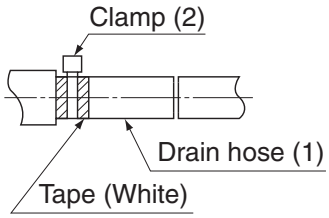


Fig. 20

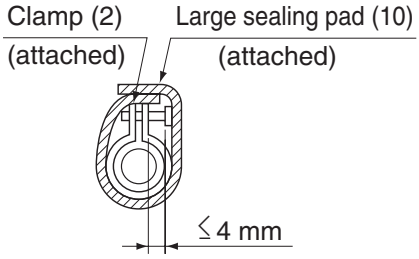


Fig. 21

**<PRECAUTIONS FOR DRAIN RAISING PIPING>**

- Install the drain raising pipes at a height of less than 550 mm.
- Install the drain raising pipes at a right angle to the indoor unit and no more than 300 mm from the unit.

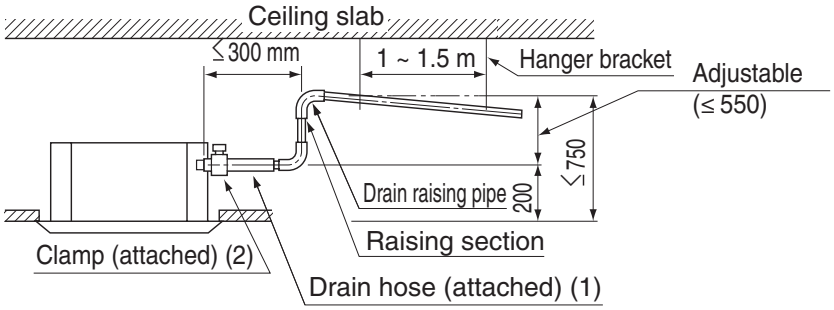


Fig. 22

**NOTE**

- To ensure no excessive pressure is applied to the included drain hose (1), do not bend or twist when installing. (This may cause leakage.)
- If converging multiple drain pipes, install according to the procedure shown below.

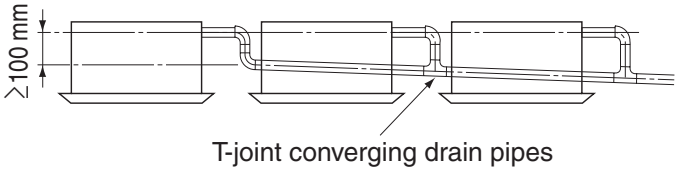


Fig. 23

Select converging drain pipes whose gauge is suitable for the operating capacity of the unit.

**(2)** After piping work is finished, check if drainage flows smoothly.
- Open the water inlet lid, add approximately 2000 cc of water slowly and check drainage flow.

**WHEN ELECTRIC WIRING WORK IS FINISHED**
- Check drainage flow during COOL running, explained under “12. TEST OPERATION”.

**WHEN ELECTRIC WIRING WORK IS NOT FINISHED**
- Remove the control box lid and change the emergency switch above the PC board assembly of the indoor unit from “Normal” to “Emergency”. Connect the single-phase power supply to connections No. 1 and No. 3 on the power supply (50/60Hz 220–240V/220V) terminal board and confirm drain operation. Be sure to change the switch before turning on the power.
- Be aware that the fan will turn during the operation.
- After confirming drainage, turn off t he power and be sure to change the emergency switch back to “Normal”.

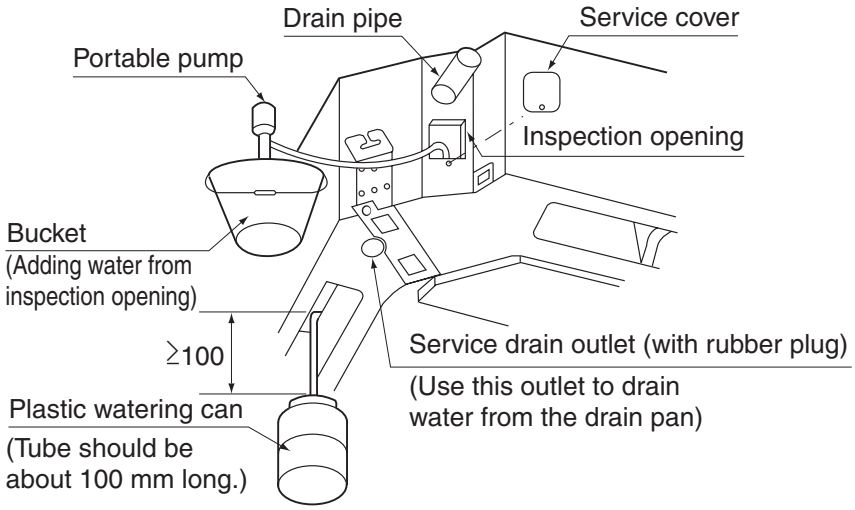


<Adding water through air discharge>
[Method of adding water]

(unit:mm)

**Fig. 24**

**CAUTION**

Drain piping connections
Do not connect the drain piping directly to sewage pipes that smell of ammonia. The ammonia in the sewage might enter the indoor unit through the drain pipes and corrode the heat exchanger.

## 8. WIRING EXAMPLE

For the wiring of outdoor units, refer to the installation manual attached to the outdoor units.
**Confirm the system type.**

- **Pair type**: 1 remote controller controls 1 indoor unit. (standard system) **(Refer to Fig. 25)**
- **Group control**: 1 remote controller controls up to 16 indoor units. (All indoor units operate according to the remote controller) **(Refer to Fig. 26)**
- **2 remote controller control**: 2 remote controller control 1 indoor unit. **(Refer to Fig. 27)**

**Fig.25**

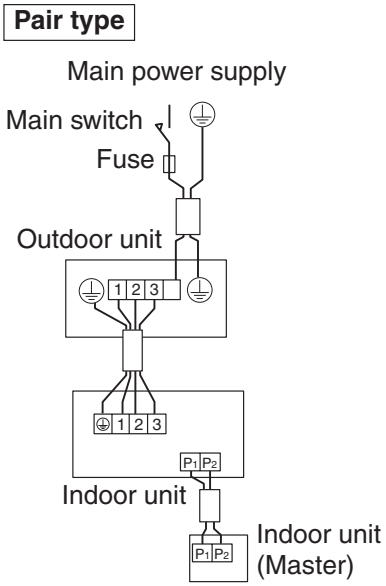


**Fig.26**

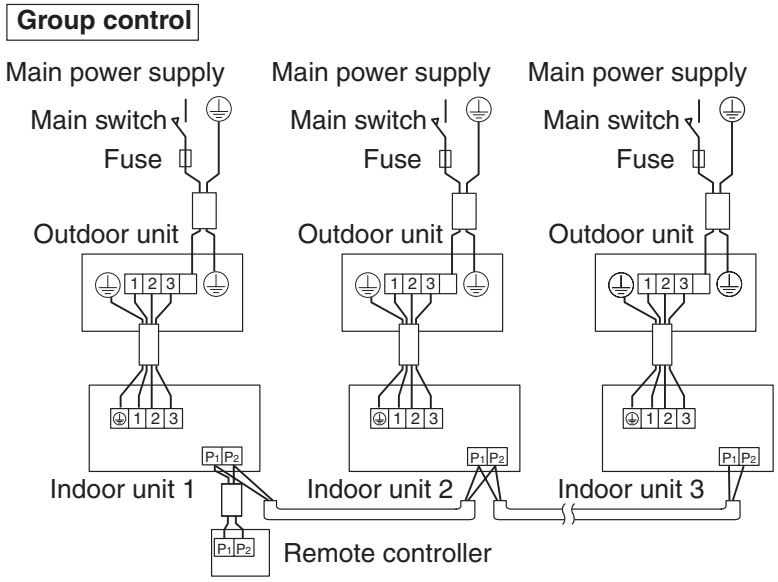


**Fig.27**

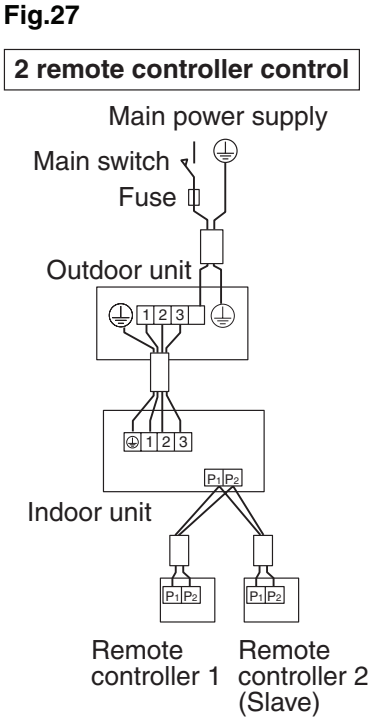

**NOTE**

1. All transmission wiring except for the remote controller wires is polarized and must match the terminal symbol.
2. When BRC1C61 is used, connect a shielded portion with the ground terminal.
3. For group control remote controller, choose the remote controller that suits the indoor unit which has the most functions (as attached swing flap)



## 9. ELECTRIC WIRING WORK

- All field supplied parts and materials and electric works must conform to local codes.
- Use copper wire only.
- For electric wiring work, refer to also “8. WIRING EXAMPLE” attached to the unit body.
- For remote controller wiring details, refer to the installation manual attached to the remote controller.
- All wiring must be performed by an authorized electrician.
- A circuit breaker capable of shutting down power supply to the entire system must be installed.
- Refer to the installation manual attached to the outdoor unit for the size of power supply electric wire connected to the outdoor unit, the capacity of the circuit breaker and switch, and wiring instructions.
- Be sure to ground the air conditioner.
- Do not connect the ground wire to gas pipes, plumbing pipes, lightning rods or telephone ground wires.
  - Gas pipes: might cause explosions or fire if gas leaks.
  - Plumbing: no grounding effect if hard vinyl piping is used.
  - Telephone ground wires or lightning rods: might cause abnormally high electric potential in the ground during lighting storms.

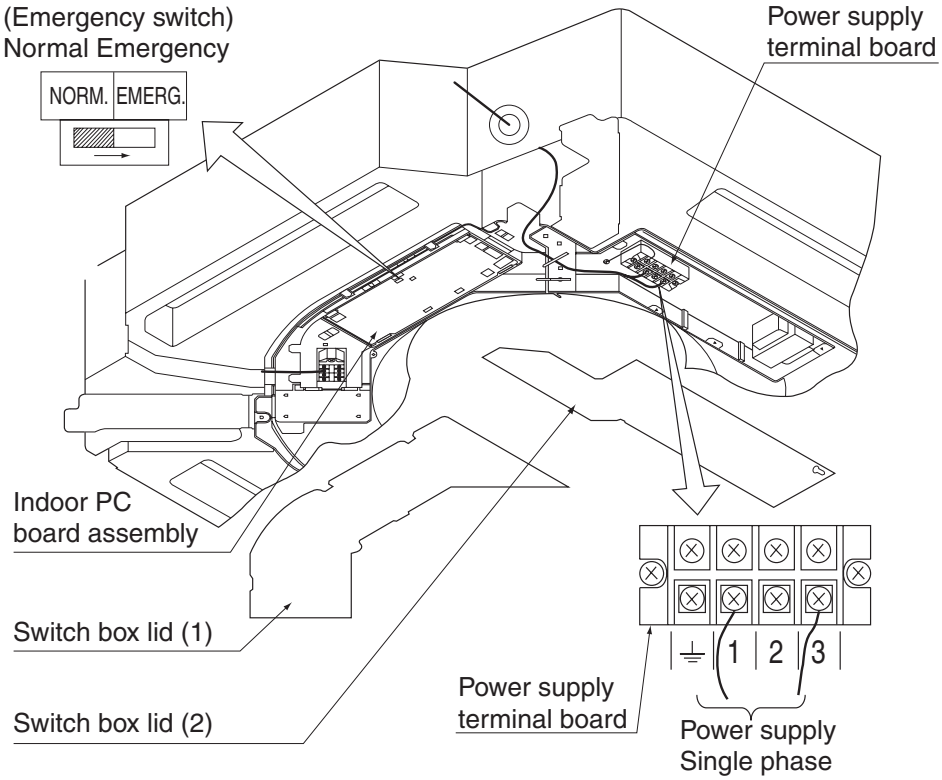


**Fig. 28**

- **Specifications for field wire**

Table 4

| | Wire | Size ($mm^2$) | Length |
|---|---|---|---|
| Between indoor units | H05VV – U4G (NOTE 1) | 2.5 | – |
| Unit-Remote controller | NOTE 2 (2 wire) | 0.75 – 1.25 | Max. 500 m |

**NOTE**
1. Shows only in case of protected pipes. Use H07RN-F in case of no protection.
2. For Asian market : Vinyl cord with sheath or cable (Insulated thickness : 1mm or more)
   For Australian regular : Shield wire (Insulated thickness : 1mm or more)

**PRECAUTION**
Arrange the wires and fix a lid firmly so that the lid does not float during wiring work.

**CAUTION**
- Do not clamp remote controller cords together with wires connecting the units together. Doing so may cause malfunction.
- Remote controller cords and wires connecting the units should be located at least 50 mm from other electric wires. Not following this guideline may result in malfunction due to electrical noise.

**Connection of wiring between units and for the remote control cord (Refer to Fig. 31)**
- Wiring the units
  Remove the switch box lid (2) and connect wires of matching phase to the power supply terminal board (4 P) inside. In doing this, pull the wires inside through rubber bush A and clamp the wires along with other wires using clamp A, untightening the clip of clamp A by pressing. After the connection, tighten clamp A as before.
- Remote controller cords
  Remove the switch box lid (1) and pull the wires inside through rubber bush B and connect to the terminal board for remote controller (6 P). (no polarity)
- After connection, attach sealing pad (12)
- Be sure to attach it to prevent the infiltration of water from the outside.

Observe the notes mentioned below when wiring to the power supply terminal board.
**Precautions to be taken for power supply wiring**
Use a round crimp-style terminal for connection to the power supply terminal board.
In case it cannot be used due to unavoidable reasons, be sure to observe the following instructions.
**(Refer to Fig. 29)**

- Do not connect wires of different gauge to the same power supply terminal. (Looseness in the connection may cause overheating.) **(Refer to Fig. 30)**
- When connecting wires of the same gauge, connect them according to. **(Refer to Fig. 30)**
- In wiring, make certain that prescribed wires are used, carry out complete connections, and fix the wires so that outside forces are not applied to the terminals.

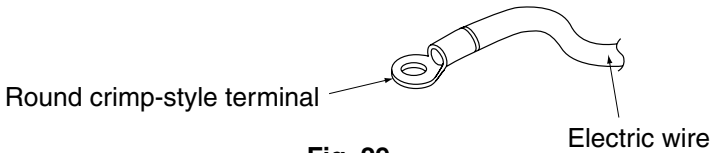


**Fig. 29**

**Fig. 30**

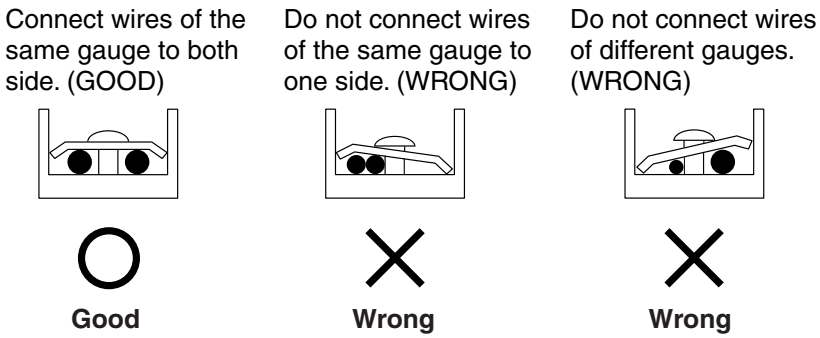


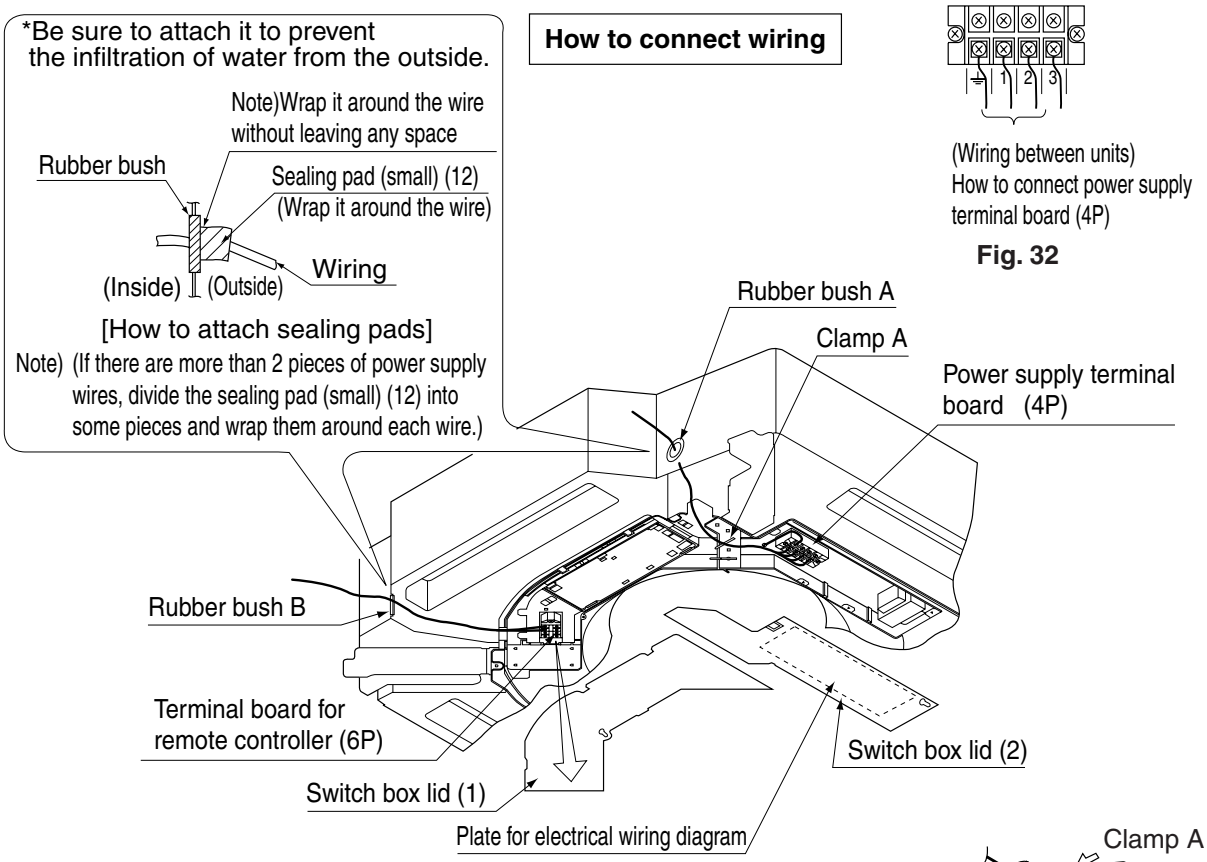


**Fig. 31**




**Fig. 32**

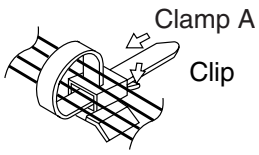


**Fig. 33**

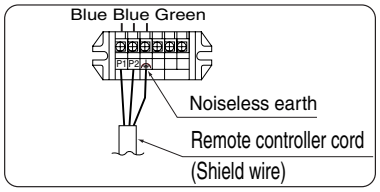


(In case a shield wire is used (Note 2))

# 10. FIELD SETTINGS

**Field settings must be made from the remote controller and in accordance with installation conditions.**

- Settings can be made by changing the “Mode No”, “FIRST CODE NO.” and “SECOND CODE NO.”.
- The “Field Settings” included with the remote control lists the order of the settings and method of operation.

## 10-1 Setting ceiling height

- Select the SECOND CODE NO. that corresponds to the ceiling height “Table 5”.
  (SECOND CODE NO. is factory set to “01” for a ceiling height of less than 2.7m .)

Table 5

| Ceiling height (m) | | | Mode No. | FIRST CODE NO. | SECOND CODE NO. |
|---|---|---|---|---|---|
| FHC18·21·26NUV1 | FHC30·36·42·48NUV1 | | 13 (23) | 0 | 01 |
| Less than 2.7 m | Less than 3.2m | N | | | |
| More than 2.7 m; 3.0 m or less | More than 3.2m; 3.6m or less | H | | | 02 |
| More than 3.0 m; 3.5 m or less | More than 3.6m; 4.2m or less | S | | | 03 |

The figure of ceiling height is for air discharge in 4 directions.

## 10-2 Setting air discharge direction

- For changing air discharge direction (2 or 3 directions), refer to the option handbook of the optional blocking pad kit.
  (SECOND CODE NO. is factory set to “01” for air discharge in 4 directions.)

## 10-3 Setting when installing high performance filters

- In case of installing high performance filters, refer to the option handbook of the high performance filters.

## 10-4 Setting air filter sign

- Remote controllers are equiped with liquid crystal display air filter signs to display the time to clean air filters.
- Change the SECOND CODE NO. according to “Table 6” depending on the amount of dirt or dust in the room.
  (SECOND CODE NO. is factory set to “01” for filter contamination-light.)

Table 6

| Setting | Spacing time of display air filter sign (long life type) | Mode No. | FIRST CODE NO. | SECOND CODE NO. |
|---|---|---|---|---|
| Air filter contamination-light | Approx. 2500 hrs | 10 (20) | 0 | 01 |
| Air filter contamination-heavy | Approx. 1250 hrs | | | 02 |

### 10-5 When implementing group control

- When using as a pair unit or as a parent unit for simultaneous operation multi, you may simultaneous start/stop (group) control up to 16 unit with the remote control.
- In this case, all the indoor units in the group will operate in accordance with the group control remote control.
- Select a remote control which matches as many of the functions in the group as possible.

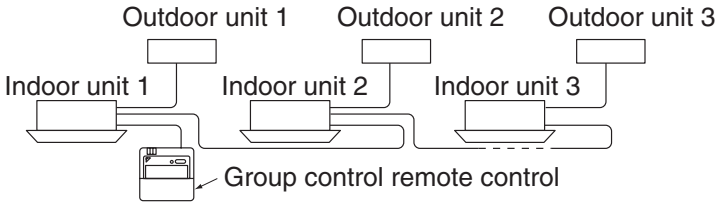


**Fig. 34**

**Wiring Method**

**(1)** Remove the switch box lid. (See “9. ELECTRIC WIRING WORK”.)

**(2) Cross-wire the remote control terminal block ($P_1$ $P_2$) inside the switch box. (There is no polarity.) (Refer to Fig. 26 and Table 4)**

### 10-6 Control by 2 Remote Controllers (Controlling 1 indoor unit by 2 remote controllers)

- When using 2 remote controllers, one must be set to “MAIN” and the other to “SUB”.

**MAIN/SUB CHANGEOVER**

**(1)** Insert a ⊖ screwdriver into the recess between the upper and lower part of remote controller and, working from the 2 positions, pry off the upper part. (The remote controller PC board is attached to the upper part of remote controller.) **(Refer to Fig. 35)**

**(2)** Turn the **main/sub changeover** switch on one of the two remote controller PC boards to “S”. (Leave the switch of the other remote controller set to “M”.) **(Refer to Fig. 36)**

**Fig. 35**

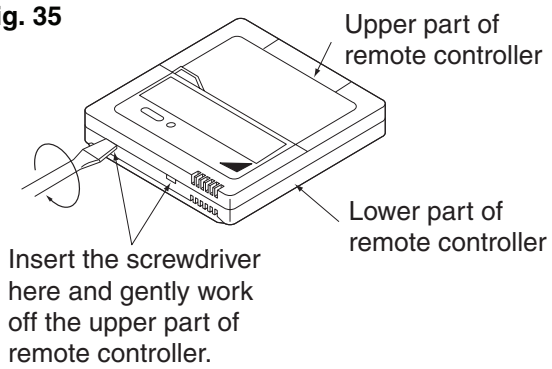


**Fig. 36**

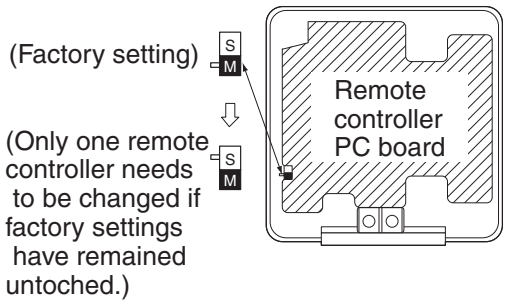


**Wiring Method** (See “9. ELECTRIC WIRING WORK” on page 15)

**(3)** Remove the switch box lid

**(4) Add remote control 2 (slave) to the remote control terminal block ($P_1$, $P_2$) in the switch box. (There is no polarity.) (Refer to Fig. 27 and Table 4)**

## 11. INSTALLATION OF THE DECORATION PANEL

<Read “12. TEST OPERATION” before making a test run without attaching the decorated panels.>
Refer to the installation manual attached to the decoration panel.
After installing the decoration panel, ensure that there is no space between the unit body and decoration panel.

# 12. TEST OPERATION

**Refer to the section of "FOR THE FOLLOWING ITEMS, TAKE SPECIAL CARE DURING CONSTRUCTION AND CHECK AFTER INSTALLATION IS FINISHED." on page 4.**

- After finishing the construction of refrigerant piping, drain piping, and electric wiring, conduct test operation accordingly to protect the unit.

## 12-1 TEST OPERATION

1. Open the gas side stop valve.
2. Open the liquid side stop valve.
3. Set to cooling operation with the remote controller and start operation by pushing ON/OFF button ( ⏻ ).
4. Press INSPECTION/TEST OPERATION button ( TEST ) 4 times (2 times for wireless remote controller) and operate at Test Operation mode for 3 minutes.
5. Push air FLOW DIRECTION ADJUST button ( ) to make sure the unit is in operation.
6. Press INSPECTION/TEST OPERATION button ( TEST ) and operate normally.
7. Confirm function of unit according to the operation manual.

**PRECAUTIONS**

1. Refer to the diagnoses below if the unit does not operate properly.
2. After completing the test run, press the INSPECTION/TEST OPERATION button once to put the unit in inspection mode, and make sure the malfunction code is "00". (=normal)
   If the code reads anything other than "00", refer to the malfunction diagnoses below.

**NOTE**

- If a malfunction is preventing operation, refer to the malfunction diagnoses below.

## 12-2 Cautions for servicing

**With the power on. Troubles can be monitored on the remote controller or the LED's on the PC board of the indoor unit.**

■ Trouble shooting with the display on the liquid crystal display remote controller.

1. With the wired remote controller. (Note 1)
   When the operation stops due to trouble, operation lamp flashed, and " " and the error code are indicated on the liquid crystal display. In such a case, diagnose the fault contents by referning to the table on the Error code list it case of group control, the unit No. is displayed so that the indoor unit no with the trouble can be recognized. (Note 2)
2. With the wireless remote controller.
   (Refer also to the operation manual attached to the wireless remote controller)
   When the operation stops due to trouble. the display on the indoor unit flashes. In such a case, diagnose the fault contents with the table on the Error code list looking for the error code which can be found by following procedures. (Note 2)
   **(1)** Press the INSPECTION /TEST OPERATION button, " " is displayed and " 0 " flashes.
   **(2)** Press the PROGRAMMING TIME button and find the unit No. which stopped due to trouble.
   Number of beeps3 short beepsPerform all the following operations
   1 short beep Perform (3) and (6)
   1 long beep No trouble
   **(3)** Press the OPERATION MODE SELECTOR button and upper figure of the error code flashes.
   **(4)** Continue pressing the PROGRAMMING TIME button unit it makes 2 short beeps and find the upper code.
   **(5)** Press the Operation selector button and lower figure of the error code flashes.
   **(6)** Continue pressing the PROGRAMMING TIME button unit it makes a long beep and find the lower code.
   - A long beep indicate the error code.

■ Trouble shooting with the LEDs on the PC board
The following checking can be made with the service monitor LEDs (green). (Normal when flashing)

☼ : LED lit ● : LED off ◑ : LED flashing
— : Unrelated to diagnosis

2

| Microcomputer normal monitor | Transmission normal monitor | Details |
|---|---|---|
| HAP | HBP | |
| ◑ | ◑ | Indoor unit is normal → Diagnose the outdoor unit |
| ◑ | ☼ | Malfunction of indoor unit PC board assembly or miswiring between indoor and outdoor units |
| | ● | If the outdoor unit LED-A does not light, diagnose the outdoor unit. if it flashes, it is due to either miswiring or malfunction of the indoor unit PC board assembly. (NOTE 4) |
| ☼ | — | Malfunction of the indoor unit PC board (NOTE 5) |
| ● | | Abnomal power supply, malfunction of PC board assembly or disconnection between the indoor and outdoor units (NOTE 5) |

**NOTE**

1. In case wired remote controller. Press the INSPECTION /TEST OPERATION button on remote controller, " ☼ " starts flashing.
2. Keep down the ON/OFF button for 5 seconds or longer in the inspection mode and the above trouble history disappears, after the trouble code goes on and off twice, followed by the code "00"(normal).
   The display changes from the inspection mode to the normal mode.
3. Equipment operation in response to errors will vary according to model.
4. If the HBP is off, the branch wiring between each of the indoor and outdoor units may either be incorrectly connected or broken. Before taking any of the diagnostic steps listed above, check the branch wiring.
   If the HBP is off on an inverter, ther is a possibility that the fuse on the outdoor unit's P-board is burnt out.
5. Cut off the power and wait for 5 seconds or longer. Turn on the power again and see if the LED is in the same state again.

## 12-3 Error code list

- For plases where the error code is left blank, the "☼" indication is not displayed. Though the system continues operating, be sure to inspect the system and make repairs as necessary.
- Depending on the type of indoor or outdoor unit, the malfunction code may or may not be displayed.

| Code | Malfunction/Remarks |
|---|---|
| A1 | Indoor unit's PC board faulty |
| A3 | Drain water level abnormal |
| A6 | Indoor fan motor overloaded, overcurrent or locked |
| **AF** | Humiditier faulty |
| **AH** | Air cleaner faulty |
| | Only the air cleaner does not function. |
| AJ | Type set improper |
| | Capacity data is wrongly proset. Or there is nothing programmed in the data hold IC. |
| C4 | Sensor for heat exchanger lamp is fault |
| C9 | Sensor for suction air lamp is fault |

| | |
|---|---|
| **CJ** | Sensor for remote controller is fault |
| | The remote controller thermistor does not function, but the system thermo run is possible. |
| E0 | Action of safety device (outdoor unit) |
| E1 | Outdoor unit's PC board faulty |
| E3 | High pressure abnormal(outdoor unit) |
| E4 | Low pressure abnormal (outdoor unit) |
| E5 | Compressor motor lock malfunction |
| E7 | Outdoor fan motor lock malfunction<br>Outdoor fan instantneous overcurrent malfunction |
| E9 | Electronic expansion valve faulty (outdoor unit) |
| F3 | Discharge pipe temperature abnormal (outdoor unit) |
| H3 | High pressure switch faulty (outdoor unit) |
| H4 | Low pressure switch faulty (outdoor unit) |
| H7 | Outdoor motor position signal malfunction |
| **H9** | Outdoor air thermistor faulty (outdoor unit) |
| | (NOTE 3) |
| **J3** | Discharge pipe thermistor faulty (outdoor unit) |
| | (NOTE 3) |
| J5 | Suction pipe thermistor faulty (outdoor unit) |
| **J6** | Heat exchanger thermistor faulty (outdoor unit) |
| | (NOTE 3) |
| L4 | Overheated heat-radiating fin (outdoor) |
| | Inverter cooling defect. |
| L5 | Instantaneous overcurrent (outdoor) |
| | Possible earth fault or short circuit in the compressor motor. |
| L8 | Electric thermal (outdoor) |
| | Possible electrical overload in the compressor or cut line in the compressor motor. |
| L9 | Stall prevention (outdoor) |
| | Compressor possibly locked. |
| LC | Transmission malfunction between the outdoor control units' inverters (outdoor) |
| P1 | Open-phase (outdoor) |
| P3 | P-board temperature sensor malfunction (outdoor) |
| P4 | Heat-radiating fin temperature sensor malfunction (outdoor) |
| PJ | Type set improper (outdoor unit) |
| | Capacity data is wrongly proset. Or there is nothing programmed in the data hold IC. |
| **U0** | Suction pipe temperature abnormal |
| U1 | Reverse phase |
| | Reverse two of the L1,L2and L3 leads. |
| U2 | Power source voltage malfunction (NOTE 3) |
| | Includes the defect in 52C. |
| U4<br>UF | Transmission error (indoor unit – outdoor unit) |
| | Wrong wiring between indoor and outdoor units or malfunction of the PC board mounted on the indoor and the outdoor units.<br>If UF is shown, the wiring between the indoor and outdoor units is not properly wired. Therefore, immediately disconnect the power supply and correct the wiring.<br>(The compressor and the fan mounted on the outdoor unit may start operation independent of the remote controller operation.) |

| | |
|---|---|
| U5 | Transmission error (indoor unit – remote controller) |
| | Transmission is improper between the indoor unit and the remote controller. |
| U8 | Malfunction in transmission between main and sub remote controls.<br>(Malfunction in sub remote control.) |
| UA | Miss setting for multi system |
| | Setting is wrong for selector switch of multi-system. (see switch SS2 on the main unit's PC board) |
| **UC** | Central control address overlapping |

## 1.2 FH-NUV1

### 1.2.1 Names and functions of parts

| | |
|---|---|
| a | Indoor unit |
| b | Outdoor unit |
| c | Remote controller |
| d | Air flow Inlet |
| e | Air flow outlet |
| f | Air flow flap (at air flow outlet) |
| g | Refrigerant piping, connection electric wire |
| h | Drain pipe |
| i | Air flow inlet<br>The built-in air filter removes dust and dirt. |
| j | Ground wire<br>Wire to ground from the outdoor unit to prevent electrical shocks. |

**Fig. 1**

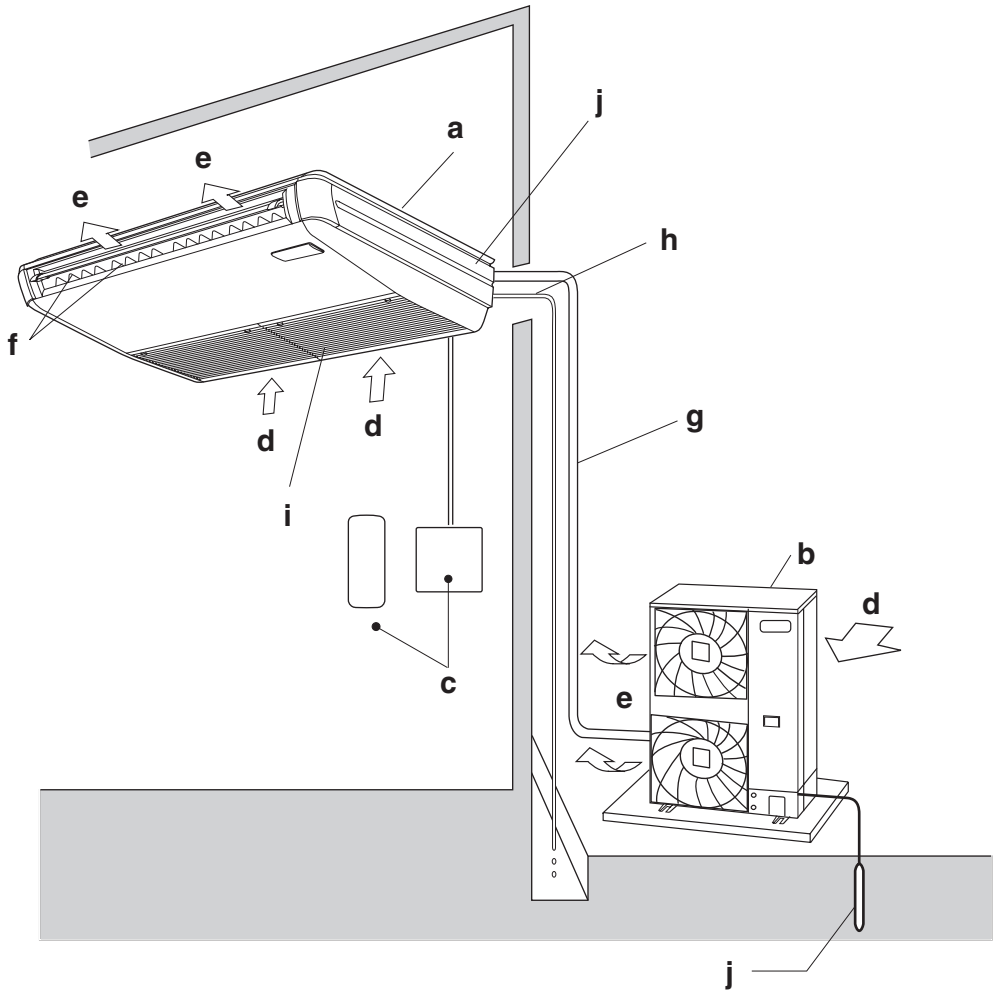


3PN07087-1D

### 1.2.2 Installation

1PN07240-1D

DAIKIN

# INSTALLATION MANUAL

2

## SPLIT SYSTEM AIR CONDITIONERS

## MODELS
## (Ceiling suspension type)
## FH21NUV1 • FH26NUV1• FH30NUV1
## FH36NUV1 • FH42NUV1 • FH48NUV1

## 1 SAFETY CONSIDERATIONS

Please read these “SAFETY CONSIDERATIONS” carefully before installing air conditioning equipment and be sure to install it correctly. After completing the installation, make sure that the unit operates properly during the start-up operation. Please instruct the customer on how to operate the unit and keep it maintained.
Also, inform customers that they should store this installation manual along with the operation manual for future reference. After completing installation, conduct a trial operation to check for faults and explain to the customer how to operate the air conditioner and take care of it with the aid of operation manual. Ask the customer to store the installation manual along with the operation manual for future reference.
This air conditioner comes under the term “appliances not accesible to the general public”.
In a domestic environment this product may cause radio interference in which case the user may be required to take adequate measures.
Meaning of warning and caution symbols.

**WARNING** ..... Failure to follow these instructions properly may result in personal injury or loss of life.

**CAUTION** ..... Failure to observe these instructions properly may result in property damage or personal injurly, which may be serious depending on the circumstances.

**WARNING**

- Ask your dealer or qualified personal to carry out installation work.
  Do not attempt to install the air conditioner yourself. Improper installation may result in water leakage,electric shocks or fire.
- Perform installation work in accordance with this installation manual.
  Improper installation may result in water leakage, electric shocks or fire.
- Consult your local dealer regarding what to do in case of refrigerant leakage, when the air coditioner is to be installed in a small room, it is necessary to take proper measures so that the amount of any leaked refrigerant does not exceed the concentration limit in the event of leakage. Otherwise, this may lead to an accident due to oxygen depletion.
- Be sure to use only the specified accessories and parts for installation work.
  Failure to use the specified parts may result in water leakage, electric shocks, fire or the unit falling.
- Install the air conditioner on a foundation strong enough to withstand the weight of the unit.
  A foundation of insufficient strength may result in the equipment falling and causing injuries.
- Carry out the specified installation work after taking into account strong winds, typhoons or earthquakes.
  Improper installation work may result in the equipment falling and causing accidents.
- Make sure that a separate power supply circuit is provided for this unit and that all electrical work is carried out by qualified personnel according to local laws and regulations and this installation manual.
  An insufficient power supply capacity or improper electrical construction may lead to electric shocks or fire.
- Make sure that all wiring is secured,the specified wires are used, and that there is no strain on the terminal connections or wires.
  Improper connections or securing of wires may result in abnormal heat build-up or fire.

1PN07240D

- When wiring the power supply and connecting the wiring between the indoor and outdoor units, position the wires so that the control box lid can be securely fatened. Improper positoning of the control box lid may result in electric shocks, fire or overheating terminals
- If the refrigerant gas leaks during installation, ventilate the area immediately.
  Toxic gas may be produced if the refrigerant gas comes into contact with fire.
- After completing the installation work, check that the refrigerant gas does not leak.
  Toxic gas may be produced if the refrigerant gas leaks into the room and comes into contact with a source of fire, such as a fan heater, stove or cooker.
- Before touching electrical parts, turn off the unit.
- Do not directly touch refrigerant that has leaked from refrigerant pipes or other areas, as there is a danger of frostbite.
- Do not allow children to climb on the outdoor unit and avoid placing objects on the unit. Injury may result if the unit becomes loose and falls.

**⚠ CAUTION**

- Ground the air conditioner.
  Do not connect the ground wire to gas or water pipes, lightning conductor or a telephone ground wire.
  Incomplete grounding may result in electric shocks.
- Be sure to install an earth leakage breaker.
  Failure to install an earth leakage breaker may result in electric shocks or fire.
- While following the instructions in this installation manual, install drain piping in order to ensure proper drainage and insulate piping in order to prevent condensation.
  Improper drain piping may result in water leakage and property damage.
- Make sure to provide for adequate measure in order to prevent that the outdoor unit be used as a shelter by small animals.
- Small animals making contact with electrical parts can cause malfunctions, smoke or fire. Please instruct the customer to keep the area around the unit clean.
- Install in a machine room that is free of moisture. The unit is designed for indoor use.
- Install the indoor and outdoor units, power cord and connecting wires at least 1 meter away from televisions or radios in order to prevent image interference or noise.
  (Depending on the radio waves, a distance of 1 meter may not be sufficient enough to eliminate the noise.)
- Remote controller (wireless kit) transmitting distance can result shorter than expected in rooms with electronic fluorescent lamps (inverter or rapid start types).
  Install the indoor unit as far away from fluorescent lamps as possible.
- Do not install the air conditioner in the following locations:
  (a) where a mineral oil mist or an oil spray or vapor is produced, for example in a kitchen
  Plastic parts may deteriorate and fall off or result in water leakage.
  (b) where corrosive gas, such as sulfurous acid gas, is produced
  Corroding copper pipes or soldered parts may result in refrigerant leakage.
  (c) near machinery emitting electromagnetic waves
  Electromagnetic waves may disturb the operation of the control system and result in a malfunction of the equipment
  (d) where flammable gases may leak, where there are carbon fiber or ignitable dust suspensions in the air, or where volatile flammables such as thinner or gasoline are handled.
  Operating the unit in such conditions may result in fire.
- **Disposal requirements**
  Dismantling of the unit, treatment of the refrigerant, of the oil and of other parts must be done in accordance with relevant local and national legislation.

## 2 BEFORE INSTALLATION

- **When moving the unit while removing it from the box, be sure to lift it by holding on to the four lifting lugs without exerting any pressure on other parts, especially swing flap, the refrigerant piping, drain piping, and other resin parts.**
- Be sure to check the type of refrigerant to be used before installing the unit. (Using an incorrect refrigerant will prevent normal operation of the unit.)
- The accessories needed for installation must be retained in your custody until the installation work is completed. Do not discard them!
- Decide upon a line of transport.
- Leave the unit inside its packaging while moving, until reaching the installation site. Where unpacking is unavoidable, use a sling of soft material or protective plates together with a rope when lifting, to avoid damage or scratches to the unit.
- When selecting installation site, refer to the paper pattern.
- For the installation of an outdoor unit, refer to the installation manual attached to the outdoor unit.
- Do not use the unit in locations with high salt content in the air such as beachfront property, locations where the voltage fluctuates such as factories, or in automobiles or marine vessels.

1PN07240D

## 2-1 ACCESSORIES

**Check the following accessories are included with your unit.**

| Name | 1) Drain hose | 2) Clamp | 3) Clamp | 4) Installation manual | 5) Operation manual |
|---|---|---|---|---|---|
| Quantity | 1 pc. | 1 pc. | 3 pcs. | 1 pc. | 1 pc. |
| Shape | | | | | 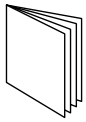 |

## 2-2 OPTIONAL ACCESSORIES

- The remote controller are required for this indoor unit “Table 1”.
  (However, the remote controller is not required for the slave unit of a simultaneous operation system.)
- These are two types of remote controllers: wired and wireless. Select a remote controller from “Table 1” according to customer request and install in an appropriate place.

Table 1

| Remote controller type | Cooling only type |
|---|---|
| Wired type | BRC1NU61 |
| Wireless type | BRC7NU66 |

## 2-3 NOTE TO THE INSTALLER

Be sure to instruct customers how to properly operate the unit (especially cleaning filters, operating different functions, and adjusting the temperature) by having them carry out operations themselves while looking at the manual.

# 3 SELECTING INSTALLATION SITE

**(1) Select an installation site where the following conditions are fulfilled and that meets your customer’s approval.**

- Where optimum air distribution can be ensured.
- Where nothing blocks air passage.
- Where condensate can be properly drained.
- Where the ceiling is strong enough to bear the indoor unit weight.
- Where the false ceiling is not noticeably on an incline.
- Where there is no risk of flammable gas leakage.
- Where sufficient clearance for maintenance and service can be ensured.

**NOTE**

- If there is space left over in the * section, opening it up 200 mm will make servicing easier.

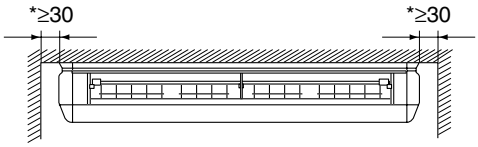


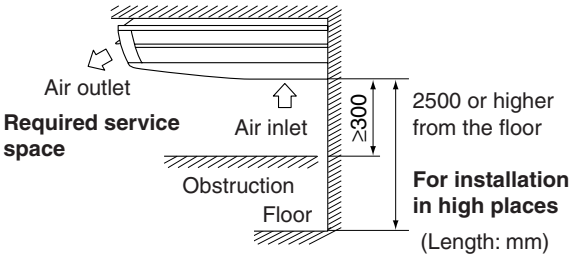


1PN07240D

- Where piping between indoor and outdoor units is possible within the allowable limit. (Refer to the installation manual for the outdoor unit.)
- Keep indoor unit, outdoor unit, power supply wiring and transmission wiring at least 1 meter away from televisions and radios. This is to prevent image interference and noise in those electrical appliances.
  (Noise may be generated depending on the conditions under which the electric wave is generated, even if 1 meter is kept.)

**(2) Use suspension bolts for installation. Check whether the ceiling is strong enough to support the weight of the unit or not. If there is a risk, reinforce the ceiling before installing the unit.**

## 4 PREPARATIONS BEFORE INSTALLATION

**(1) Relation of holes for indoor unit, suspension bolt position, piping and wiring.**

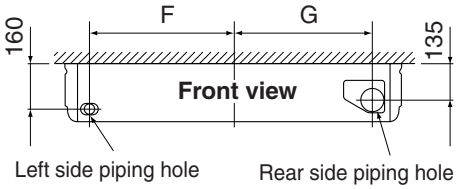


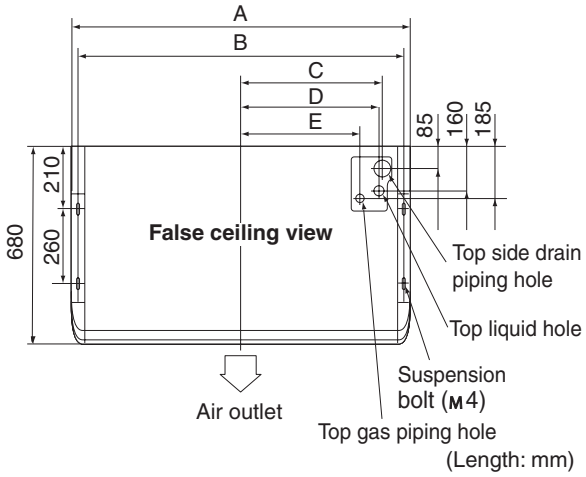


| Model (FH~) | A | B | C | D | E | F | G |
|---|---|---|---|---|---|---|---|
| Type 21 • 26 | 1160 | 1120 | 490 | 475 | 410 | 500 | 475 |
| Type 30 | 1400 | 1360 | 610 | 595 | 530 | 620 | 595 |
| Type 36 • 42 • 48 | 1590 | 1550 | 705 | 690 | 625 | 715 | 690 |

**(2) Make holes for suspension bolts, refrigerant and drain piping, and wiring.**
- Select the location for each of holes and open the holes in the ceiling.

**(3) Remove the parts from the indoor unit.**

**(3-1)**Detach the air intake grille.
- Slide the locking knobs (M2) on the air intake grille inward (direction of arrows) and lift upwards.
  **(Refer to Fig. 1)**
- With the intake grill open, remove the intake grill forward, holding on to the rear tabs on the intake grill.
  **(Refer to Fig. 2)**

1PN07240D

**Fig. 1**

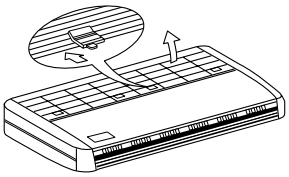

**Fig. 2**

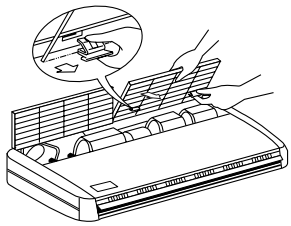

**(3-2)**Remove the dressing boards (left and right).
- After removing the securing screw for the dressing boards (one each), pull them forward (in the direction of the arrow) and remove them. **(Refer to Fig. 3)**
- Take out the included parts.

**Fig. 3**

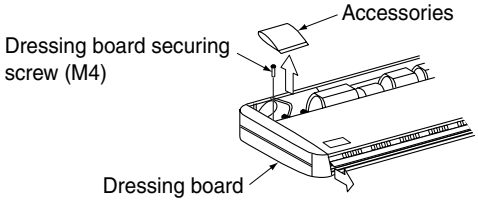


**(3-3)**Remove the hooks.
- Loosen the 2 bolts (M8) used to attach the hooks which are on each side (4 locations left and right) to within 10 mm. **(Refer to Fig. 4, 5)**
- After removing the securing screws (M5) for the hooks which are on the rear side, pull the hooks back (in the direction of the arrow), and remove them. **(Refer to Fig. 5)**

**Fig. 4**

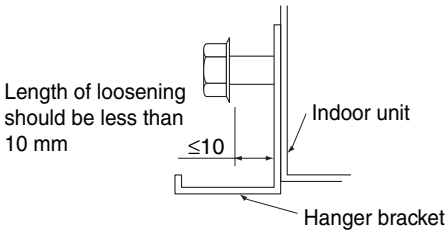


**Fig. 5**

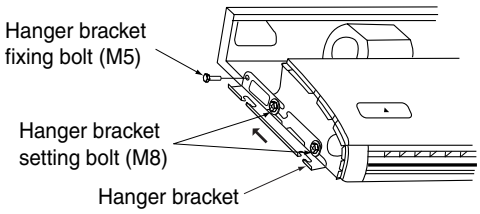


**(4) Attach the eyebolts. (Use eyebolts which are W3/8 or M8-M10 in size.)**
- Adjust the distance of the eyebolts from the ceiling in advance. **(Refer to Fig. 6)**

**NOTE**
- Use a hole-in anchor for existing ceilings, and a sunken insert, sunken anchor or other field supplied parts for new ceilings to reinforce the ceiling to bear the weight of the unit. Adjust clearance from the ceiling before proceeding further.

* All the above parts are field supplied.

**Fig. 6**

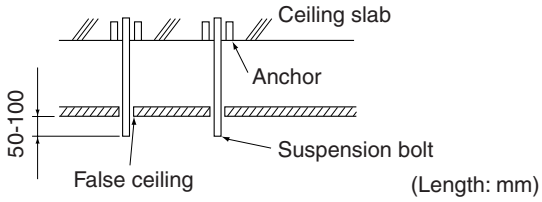


1PN07240D

## 5 INDOOR UNIT INSTALLATION

**Installing optional accessories before installing the indoor unit is easier.**
As for the parts to be used for installation work, be sure to use the provided accessories and specified parts designated by our company.

**(1) Secure the hooks to the eyebolts. (Refer to Fig. 7)**

**NOTE**
- To ensure they are safely secured, use the included washers, and secure them with a double nut to make sure.

**(2) Lift the indoor unit's main body, insert the bolt (M8) for the hook into the attachment part on the hook, while sliding the main body from the front. (Refer to Fig. 8)**

**(3) Fasten the bolts for the hooks (M8) securely in the four locations, left and right. (Refer to Fig. 8)**

**(4) Replace the screws for the hooks which had been removed (M5) securely in 2 places left and right. This is necessary to prevent any forward and back deviance in the main body of the indoor unit. (Refer to Fig. 8)**

**Fig. 7**

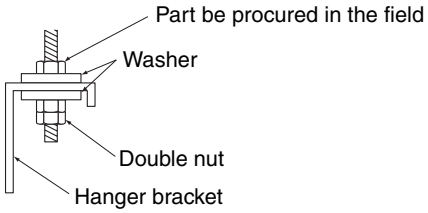


**Fig. 8**

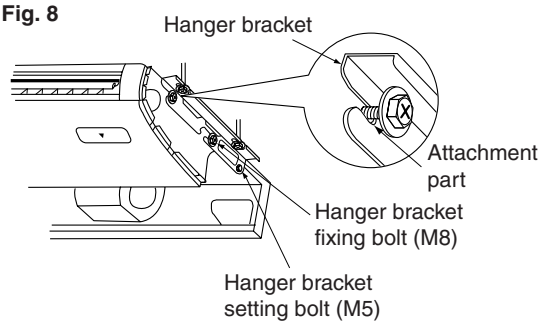


**(5) When hanging the indoor unit main body, be sure to use a level or a plastic tube with water in it to make sure the drain piping is set either level or slightly tilted, in order to ensure proper drainage. (Refer to Fig. 9)**

**Fig. 9**

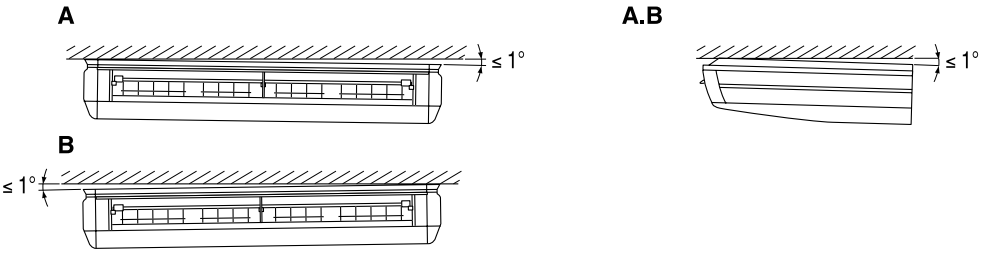


**A.When the drain piping is tilted to the right, or to the right and back.**
Place it level, or tilt it slightly to the right or the back. (Within 1˚.)

**B.When the drain piping is tilted to the left, or to the left and back.**
Place it level, or tilt it slightly to the left or the back. (Within 1˚.)

**⚠ CAUTION**
Setting the unit at an angle opposite to the drain piping might cause leaks.

1PN07240D

## 6 REFRIGERANT PIPING WORK

**〈For refrigerant piping of outdoor units, see the installation manual attached to the outdoor unit.〉**
〈Execute heat insulation work completely on both sides of the gas piping and the liquid piping. Otherwise, a water leakage can result sometimes.〉
〈Also, in cases where the temperature and humidity of the refrigerant piping sections might exceed 30˚C or RH80 %, reinforce the refrigerant insulation. (20 mm or thicker) Condensation may form on the surface of the insulating material.〉
〈Be sure to check the type of refrigerant to be used before doing any work. (Using an incorrect refrigerant will prevent normal operation of the unit.)〉

**⚠ CAUTION**

Do not allow anything other than the designated refrigerant to get mixed into the freezing cycle, such as air, etc. If any refrigerant gas leaks while working on the unit, ventilate the room thoroughly right away.

- Be sure to use both a spanner and torque wrench together, as shown in the drawing, when connecting or disconnecting pipes to/from the unit. **(Refer to Fig. 10)**
- Refer to "Table 2" for the dimensions of flare nut spaces and determine the proper tightening torque.
- When connecting the flare nut, coat the flare part (both inside and outside) with ester oil or ether oil, rotate three or four times first, then screw in. **(Refer to Fig. 11)**

**NOTE**
- Use the flare nut included with the unit main body.

**Fig. 10**

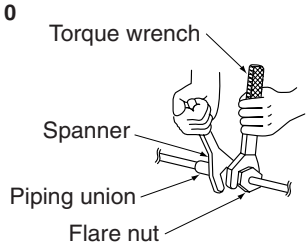


**Fig. 11**

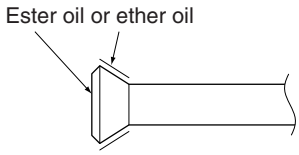


Table 2

| Pipe size mm (inch) | Tightening torque | Flare dimensions A (mm) | Flare |
|---|---|---|---|
| ∅ 6.4 (1/4") | 1420 – 1720N•cm (144 – 176 kgf•cm) | 8.3 – 8.7 | 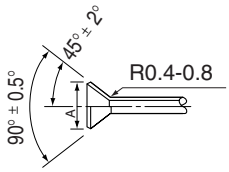  |
| ∅ 9.5 (3/8") | 3270 – 3990N•cm (333 – 407 kgf•cm) | 12.0 – 12.4 | |
| ∅ 12.7 (1/2") | 4950 – 6030N•cm (504 – 616 kgf•cm) | 15.4 – 15.8 | |
| ∅ 15.9 (5/8") | 6180 – 7540N•cm (630 – 770 kgf•cm) | 18.6 – 19.0 | |
| ∅ 19.1 (3/4") | 9720 – 11860N•cm (990 – 1210 kgf•cm) | 22.9 – 23.3 | |

- Refer to "Table 2" to determine the proper tightening torque.

**⚠ CAUTION**

Overtightening may damage the flare and cause leaks.

1PN07240D

**— Not recommendable but in case of emergency**

You must use a torque wrench but if you are obliged to install the unit without a torque wrench, you may follow the installation method mentioned below.

**After the work is finished, make sure to check that there is no gas leak.**

When you keep on tightening the flare nut with a spanner, there is a point where the tightening torque suddenly increases. From that position, further tighten the flare nut the angle shown below:

| Pipe size mm (inch) | Further tightening angle | Recommended arm length of tool |
|---|---|---|
| ∅ 6.4 (1/4") | 60 to 90 degrees | Approx. 150 mm |
| ∅ 9.5 (3/8") | 60 to 90 degrees | Approx. 200 mm |
| ∅12.7 (1/2") | 30 to 60 degrees | Approx. 250 mm |
| ∅15.9 (5/8") | 30 to 60 degrees | Approx. 300 mm |
| ∅19.1 (3/4") | 20 to 35 degrees | Approx. 450 mm |

- Make absolutely sure to execute heat insulation works on the pipe-connecting section after checking gas leakage by thoroughly studying the following figure and using heat insulating materials for fitting. (Fasten both ends with the clamps)
  **(Refer to Fig. 12)**
- Wrap the sealing pad only around the insulation for the joints on the gas piping side.
  **(Refer to Fig. 12)**

**Fig. 12**

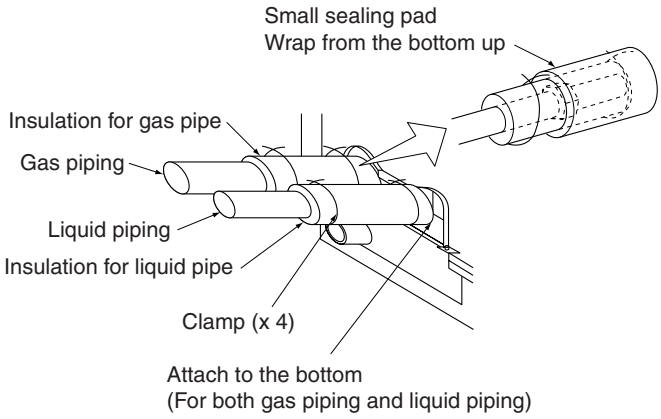


**(1) For piping facing back.**
- Remove the rear penetration lid and set the piping. **(Refer to Fig. 13, 15)**

**(2) For piping facing up.**
- When setting the piping to face up, the L-shaped branch piping kit sold separately is required.
- Removing the top penetration lid and use the L-shaped branch piping kit sold separately to set the piping.
  **(Refer to Fig. 13, 14)**

**(3) For piping facing right.**
- Cut out a slit hole on the dressing board (right) and set the piping. **(Refer to Fig. 14, 15)**

Next page

1PN07240D

**Fig. 13**

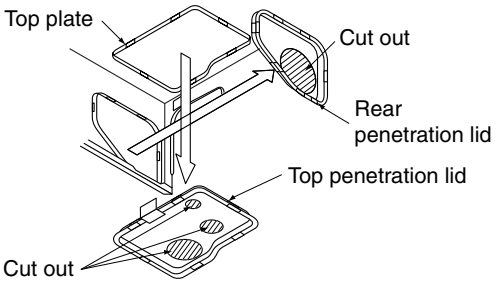


**Fig. 14**

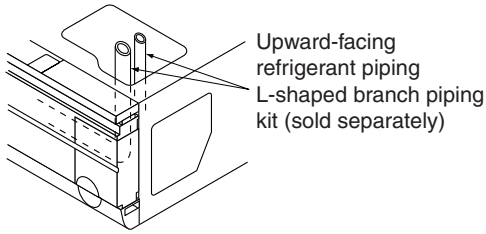


**Fig. 15**

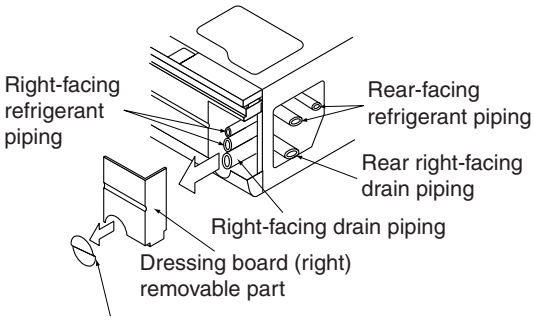


If only setting the drain piping to face right, cut this section only.

**Fig. 16**

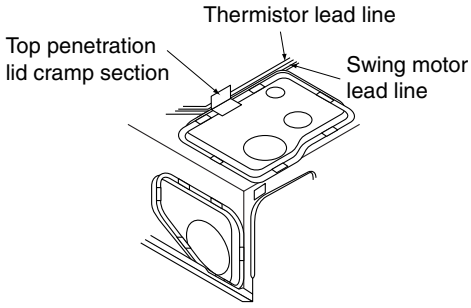


- When piping is complete, cut the removed penetration lid into the shape of the piping using scissors and attach. As when before removing the top penetration lid, secure the lead lines for the swing motor and thermistor by passing them through the cramp part on the top penetration lid. **(Refer to Fig. 13, 16)**
- When doing this, block any gaps between the piping penetration lid and the pipes using putty to prevent dust from entering the indoor unit.

## 7 DRAIN PIPING WORK

**(1) Carry out the drain piping.**

- Make sure piping provides proper drainage.
- You can select whether to bring the drain piping out from the rear right, right, rear left, or left. For rear right-facing and right-facing situations, refer to “6. REFRIGERANT PIPING WORK” for rear left-facing and left-facing situations. **(Refer to Fig. 17)**

**Fig. 17**

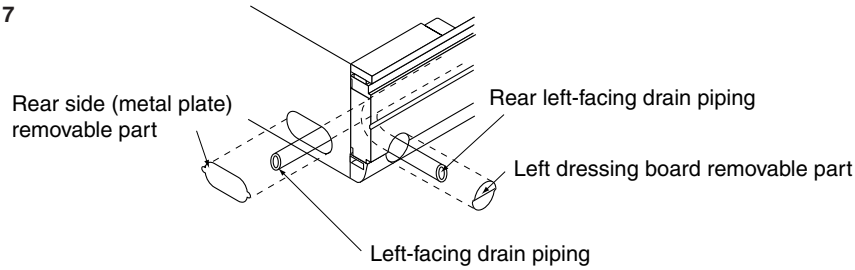


- When setting piping facing left, move the rubber stopper and insulation which are attached to the drain pipe connection hole on the left side of the indoor unit to the right-side drain pipe connection hole. When doing this, insert the rubber stopper all the way in to prevent leaks.
- Make sure the pipe diameter is the same or bigger than the branch piping. (vinyl-chloride piping, nominal diameter 20 mm, external diameter 26 mm)
- Make sure the piping is short, has at least a 1/100 slope, and can prevent air pockets from forming. **(Refer to Fig. 18)**

1PN07241C

**Fig. 18**

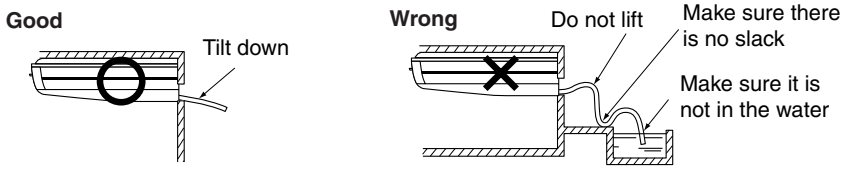


- Be sure to use the included drain hose (1) and cramp (2).
  Also, insert the drain hose completely into the drain socket, and securely attach the cramp bracket inside the gray tape area on the inserted tip of the hose. **(Refer to Fig. 19)**
  Screw the screws on the cramp bracket until there is 4 mm left. (Pay attention to the direction of the attachment to prevent the cramp bracket from coming into contact with the intake grill.)
  **(Refer to Fig. 20)**

**Fig. 19**

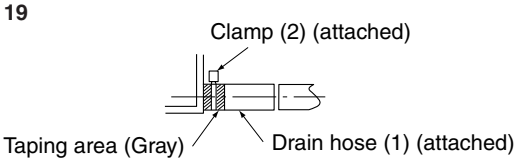


**Fig. 21**

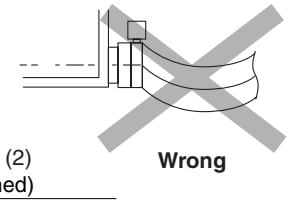


**Fig. 20**

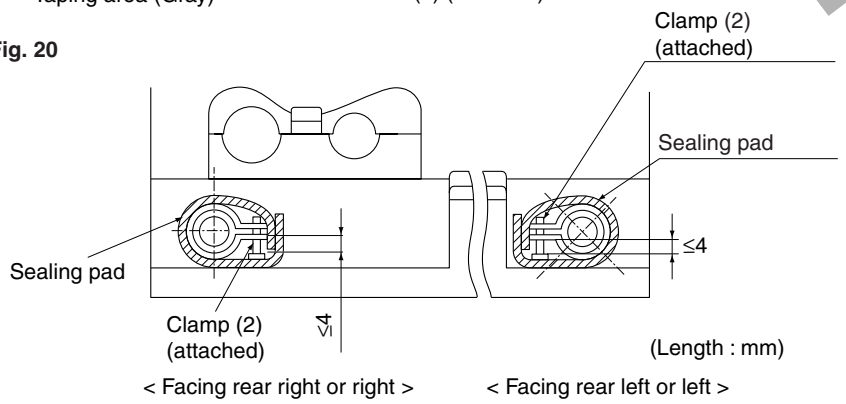


- Insulate the cramp bracket and drain hose from the bottom using the sealing pad.
  **(Refer to Fig. 20)**
- Be sure to insulate all drain piping running indoors.
- Do not allow any slack to gather in the drain hose inside the indoor unit. **(Refer to Fig. 21)**
  (Slack in the drain hose can cause the intake grill to break.)

**(2) Check to make sure the drain flows smoothly after piping is complete.**

- Slowly pour 600 ml of drain-checking fluid into the drain pan through the drain outlet.

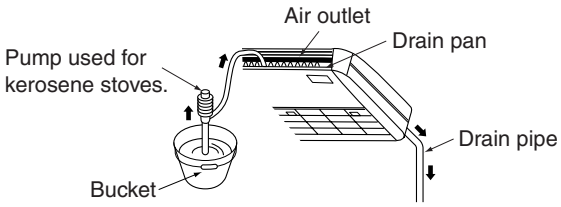


**⚠ CAUTION**

Drain piping connections
Do not connect the drain piping directly to sewage pipes that smell of ammonia. The ammonia in the sewage might enter the indoor unit through the drain pipes and corrode the heat exchanger.

1PN07241C

## 8 WIRING EXAMPLE

For the wiring of outdoor units, refer to the installation manual attached to the outdoor units.
Confirm the system type.
**(Refer to Fig. 22)**

**Fig. 22**

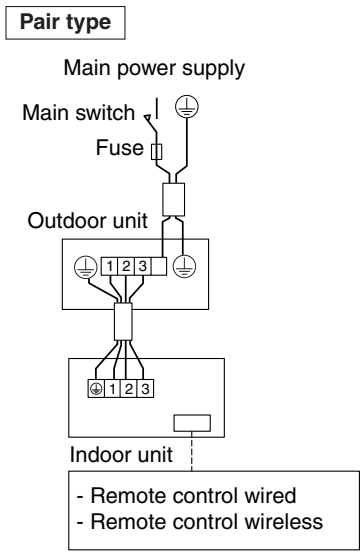


**NOTE**
- Please see the Installation manual of Remote control.
- Please see wiring diagram from Installation manual of Outdoor unit.
- All transmission wiring except for the remote controller wires is polarized and must match the terminal symbol.

## 9 ELECTRIC WIRING WORK

- All field supplied parts and materials and electric works must conform to local codes.
- Use copper wire only.
- For electric wiring work, refer to also “8. WIRING EXAMPLE” attached to the unit body.
- For remote controller wiring details, refer to the installation manual attached to the remote controller.
- All wiring must be performed by an authorized electrician.
- A circuit breaker capable of shutting down power supply to the entire system must be installed.
- Refer to the installation manual attached to the outdoor unit for the size of power supply electric wire connected to the outdoor unit, the capacity of the circuit breaker and switch, and wiring instructions.
- Do not connect the ground wire to gas pipes, plumbing pipes, lightning rods, or telephone ground wires.
  - Gas pipes: might cause explosions or fire if gas leaks.
  - Plumbing: no grounding effect if hard vinyl piping is used.
  - Telephone ground wires or lightning rods: might cause abnormally high electric potential in the ground during lighting storms.

1PN07241C

- **Specifications for field wire**

Table 3

| | Wire | Size ($mm^2$) | Length |
|---|---|---|---|
| Between indoor units | H05VV – U4G (NOTE) | 2.0 | – |

**NOTE**
- Shows only in case of protected pipes. Use H07RN-F in case of no protection.

**PRECAUTIONS**
Arrange the wires and fix a lid firmly so that the lid does not float during wiring work.

**CAUTION**
- Do not clamp remote controller cords together with wires connecting the units together. Doing so may cause malfunction.
- Remote controller cords and wires connecting the units should be located at least 50 mm from other electric wires. Not following this guideline may result in malfunction due to electrical noise.
- Make sure to avoid external force to the field wiring (*) such as by laying them in protection pipes or in the wall. **(Refer to Fig. 23)**

**Connection of wiring between units and for the remote control cord (Refer to Fig. 23)**
- Wiring between units
  Holding the switch box lid, loosen the two securing screws, remove the switch box lid, match up the phases on the power source terminal block inside (3P), and make the connections.
  After this is done, use the cramp material (3) to bind the ground wire to the anchor point.
  **(Refer to Fig. 24)**
- Remote control cord: The simultaneous operation multi sub-unit is not required. **(Refer to Fig. 23)**
  Connect to PCB. After this is done, use the cramp material (3) to bind the ground wire to the anchor point.
  **(Refer to Fig. 24)**

**Attaching the intake grill and the dressing boards**
- Once wiring is complete, firmly attach the dressing side board by reversing the steps taken to remove the intake grill.

1PN07241C

**Fig. 23**

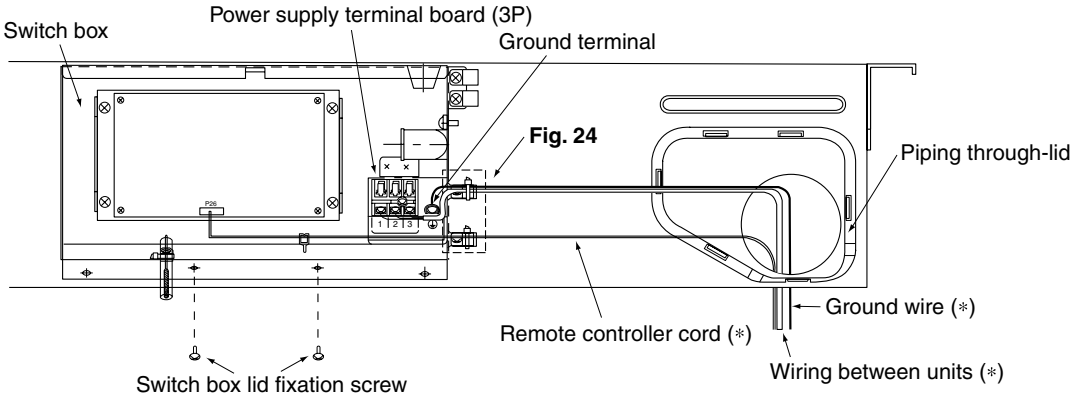


**Fig. 24**

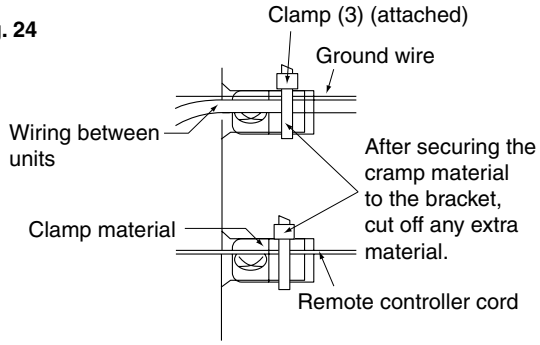


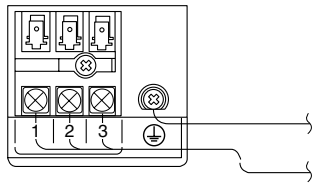


How to connect power supply terminal board (3P)

Observe the notes mentioned below when wiring to the power supply terminal board.

**Precautions to be taken for power supply wiring**

Use a round crimp-style terminal for connection to the power supply terminal board.
In case it cannot be used due to unavoidable reasons, be sure to observe the following instructions.
**(Refer to Fig. 25)**

- Do not connect wires of different gauge to the same power supply terminal. (Loosen in the connection may cause overheating.) **(Refer to Fig. 26)**
- When connecting wires of the same gauge, connect them according to. **(Refer to Fig. 26)**
- In wiring, make certain that prescribed wires are used, carry out complete connections, and fix the wires so that outside forces are not applied to the terminals.

1PN07241C

Fig. 25

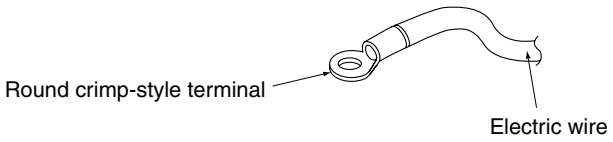


Fig. 26

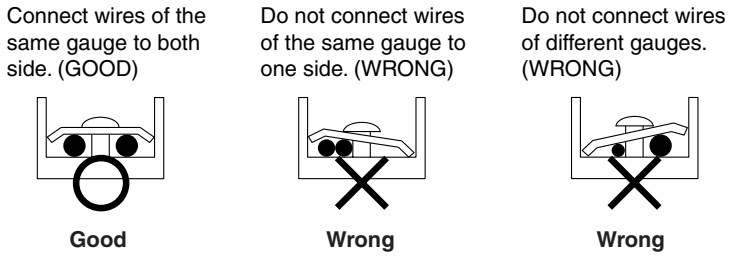


## 10 TEST OPERATION

**Refer to the section of "FOR THE FOLLOWING ITEMS, TAKE SPECIAL CARE DURING CONSTRUCTION AND CHECK AFTER INSTALLATION IS FINISHED."**

- After finishing the construction of refrigerant piping, drain piping, and electric wiring, conduct test operation accordingly to protect the unit.

**10-1 TEST OPERATION**

1. Open the gas side stop valve.
2. Open the liquid side stop valve.
3. Set to cooling operation with the remote controller and start operation by pushing ON/OFF button. (⏻ wired / ⏻ wireless)
4. Confirm function of unit according to the remote control's operation manual.

1PN07241C

## 11 ITEMS TO BE CHECKED

**FOR THE FOLLOWING ITEMS, TAKE SPECIAL CARE DURING CONSTRUCTION AND CHECK AFTER INSTALLATION IS FINISHED.**

2

**a. Items to be checked after completion of work**

| Items to be checked | If not properly done, what is likely to occur | Check |
|---|---|---|
| Is the indoor unit fixed firmly? | The unit may drop, vibrate or make noise. | |
| Is the gas leak test finished? | It may result in insufficient cooling. | |
| Is the unit fully insulated? | Condensate water may drip. | |
| Does drainage flow smoothly? | Condensate water may drip. | |
| Does the power supply voltage correspond to that shown on the name plate? | The unit may malfunction or the components burn out. | |
| Are wiring and piping correct? | The unit may malfunction or the components burn out. | |
| Is the unit safely grounded? | Dangerous at electric leakage. | |
| Is wiring size according to specifications? | The unit may malfunction or the components burn out. | |
| Is something blocking the air outlet or inlet of either the indoor or outdoor units? | It may result in insufficient cooling. | |
| Are refrigerant piping length and additional refrigerant charge noted down? | The refrigerant charge in the system is not clear. | |

**b. Items to be checked at time of delivery**

* Also review the “SAFETY CONSIDERATIONS”

| Items to be checked | Check |
|---|---|
| Did you explain about operations while showing the instruction manual to your customer? | |
| Did you hand the instruction manual over to your customer? | |

**c. Points for explanation about operations**

The items with ⚠ WARNING and ⚠ CAUTION marks in the instruction manual are the items pertaining to possibilities for bodily injury and material damage in addition to the general usage of the product. Accordingly, it is necessary that you make a full explanation about the described contents and also ask your customers to read the instruction manual.

1PN07241C

# 1.3 FDBG-NUV1

## 1.3.1 Installation

### 1 Selecting the Location

■ **Select an installation site that fulfills the following conditions and meets the customer's approval.**

- Optimum air distribution is ensured.
- The air passage is not blocked.
- Condensate can drain properly.
- The ceiling is strong enough to bear the weight of the indoor unit.
- A false ceiling does not seem to be at an incline.
- Sufficient clearance for maintenance and servicing is ensured.
- Piping between the indoor and outdoor units is within the allowable limits. (Refer to the installation manual for the outdoor unit.)
- The indoor unit, outdoor unit, power supply wiring and transmission wiring is at least 1 meter away from televisions and radios. This prevents image interference and noise in electrical appliances. (Noise may be generated depending on the conditions under which the electric wave is generated, even if a one-meter allowance is maintained.)
- Ambient air of the indoor unit is not so dusty. Drain piping may be clogged with dust and may result in water leakage and property damage. (When obliged to install the indoor unit in a dusty place, install the optional Dust Cover which prevent dust from falling into drainpan.)

■ **When exposing the body of this unit, install the unit where the bottom is move than 2.5 m high so that the user can not touch.**

■ **Use suspension bolts to install the unit. Check whether or not the ceiling is strong enough to support the weight of the unit. If there is a risk that the ceiling is not strong enough, reinforce the ceiling before installing the unit.**

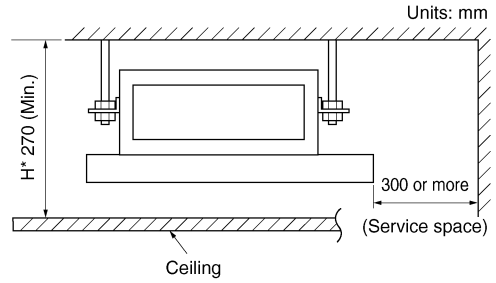


NOTES)
- Above H* is the minimum size of the indoor unit.
- Extra 20-30 mm is necessary to connect gas pipes. Determine size H* based on 1/100 of the required downward inclination indicated in "DRAIN PIPING WORK".

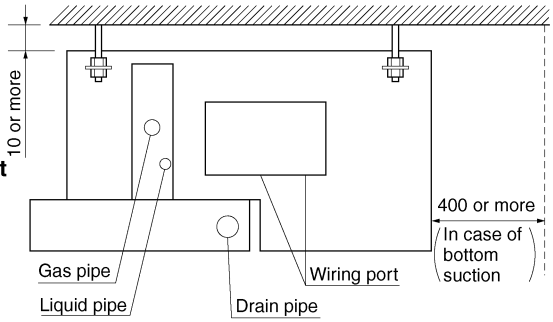


### 2 Preparations Before Installation

■ **Relation of the unit to the suspension bolt positions**

Units: mm

| Model | A | B |
|---|---|---|
| FDBG18, 21NUV1 (5) | 755 | 900 |
| FDBG26NUV1 (5) | 1155 | 1300 |

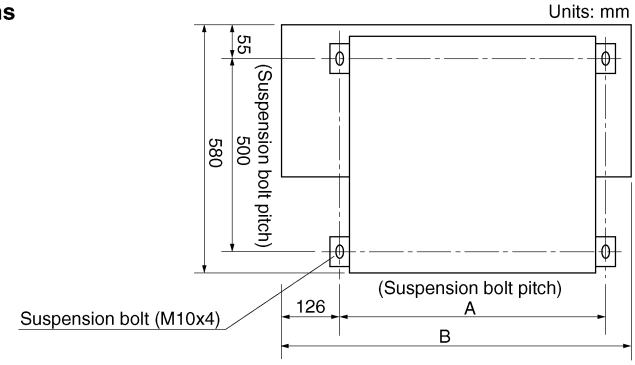


■ **Install the suspension bolts.**

(Use M10-size bolts for the suspension bolts.)
In order to reinforce the ceiling bearing the weight of the unit, use anchors when installing onto an existing ceiling or use sunken inserts, sunken anchors or other commercially available parts when installing onto a new ceiling.

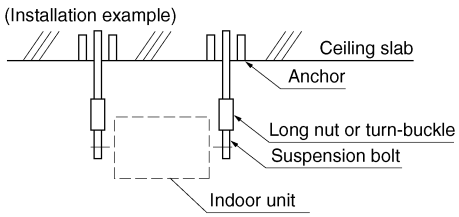


NOTE) All of the above parts are commercially available.

1PN07524

## 3 Indoor Unit Installation

■ **While installing unit, Take care that dust etc. should not drop into the drainpan.**

■ **Temporarily install the indoor unit.**

- Attach the hanger brackets to the suspension bolts. Be sure to use nuts and washers both above and below the hanger brackets to secure them.

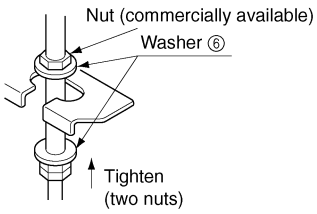


■ **Use a water level or water-filled vinyl tubes to check that the unit is level at all four corners as shown in the drawing.**

■ **Tighten the top nuts.**

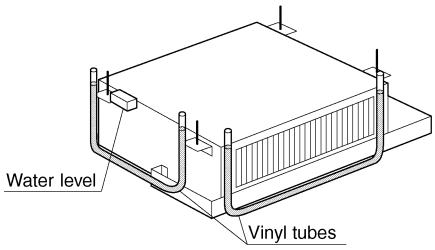


## 4 Refrigerant Piping Work

See the installation manual attached to the outdoor unit.
The outdoor unit is charged with refrigerant.

■ **Providing the connecting piping between the indoor unit and the outdoor unit**

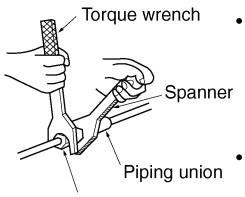


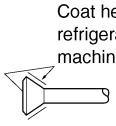


- Be sure to use both a spanner and a torque wrench together, as shown in the drawing, when connecting pipes to or disconnecting them from the unit.
- When connecting the flare nut, coat both the inside and outside with refrigerent machine oil. Then, tighten it 3 or 4 turns by hand before tightening it firmly.
- Refer to Table 1 to determine the power tightening torque. (Overtightening may damage the flare and cause leaks.)
- Check the pipe connections for gas leaks.

Table 1

| Pipe gauge | Tightening torque | Flare dimension B (mm) | Flare shape |
|---|---|---|---|
| ø6.4 | 14.2 to 17.2 N·m (144 to 176kgf·cm) | 8.6 to 9.0 | |
| ø9.5 | 32.7 to 39.9 N·m (333 to 407kgf·cm) | 12.6 to 13.0 | |
| ø12.7 | 49.5 to 60.3 N·m (504 to 616kgf·cm) | 15.8 to 16.2 | |
| ø15.9 | 61.8 to 75.4 N·m (630 to 770kgf·cm) | 19.0 to 19.4 | |
| ø19.1 | 97.2 to 118.8 N·m (990 to 1210kgf·cm) | 23.3 to 23.7 | |

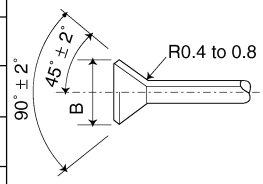


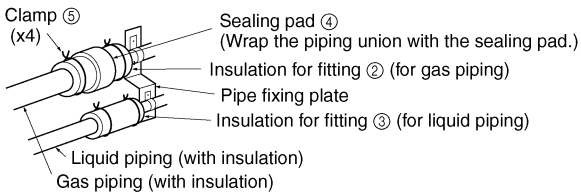


- Install the insulation as shown in the drawing above.
  (Install the insulation for the fittings attached to the pipe fixing plate.)
- Wrap the sealing pad ④ around only the union of the gas piping (over the insulation for fitting ②).

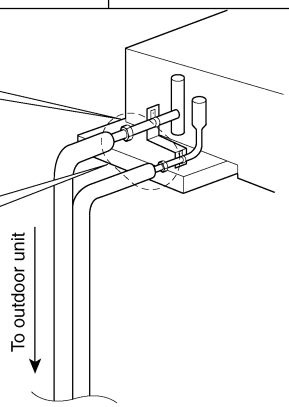


1PN07524

## 5 Drain Piping Work

■ **Connect the drain pipe as described below**

- It is necessary to clean the drainpan.
- The drain pipe outlet can be either on the right or left side.
- After making the connection, wrap the drain pipes completely with insulation.
- When connecting the drain pipe to the outlet on the left side, remove the rubber plug and attach it to the outlet on the right side.

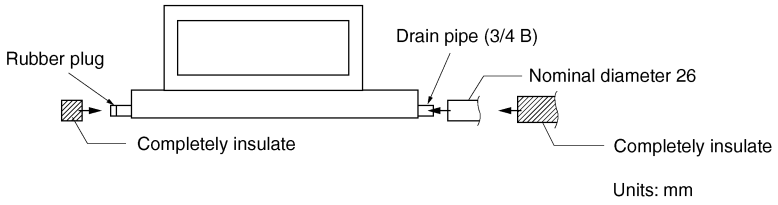


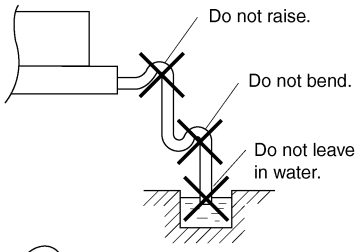


■ **Pour some water into the drain pan to check that the water drains smoothly.**

■ **Make sure that water does not leak from the drain piping, connecting parts and the drain plug.**

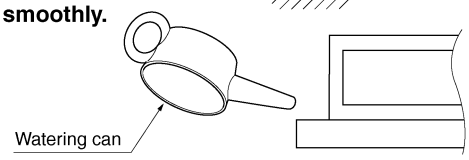


## 6 Wiring

See the installation manual attached to the outdoor unit.

**⚠ CAUTION**

Ground the air conditioner.
When grounding the air conditioner, use a ground wire of 100 Ω or less.

■ **Field wiring connection method**

For details, follow the local applicable laws and regulations concerning electrical installations.

NOTE) A commercially available remote controller can be used if its specifications are compatible with those shown in the wiring diagram and technical materials.

- Field wiring Select the correct fan speed according to the external static pressure.

| External static pressure | Fan speed |
|---|---|
| 0 to 2 mm $H_2O$ | H, L |
| 2 to 7 mm $H_2O$ | HH, H |

**⚠ CAUTION**

Be sure to use a 3-minute delay timer when starting the compressor, otherwise the compressor may not start.

1PN07524

2

- When using a commercially available two speed remote controller, refer to the following.

For an external static pressure of 0 to 2 mm $H_2O$

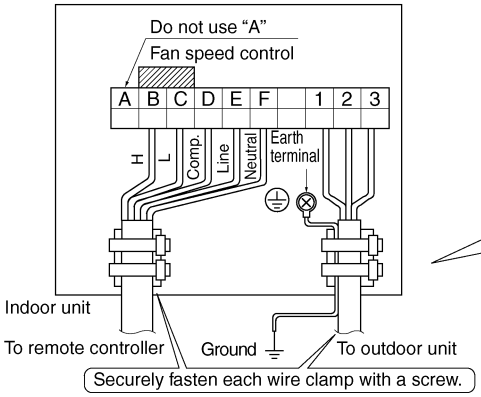


For an external static pressure of 2 to 7 mm $H_2O$

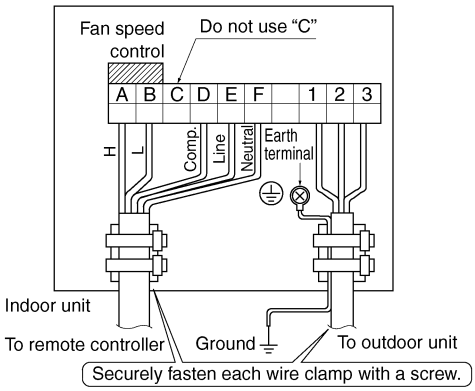


NOTE) Refer to the wiring diagram and to the installation manual of the remote controller.

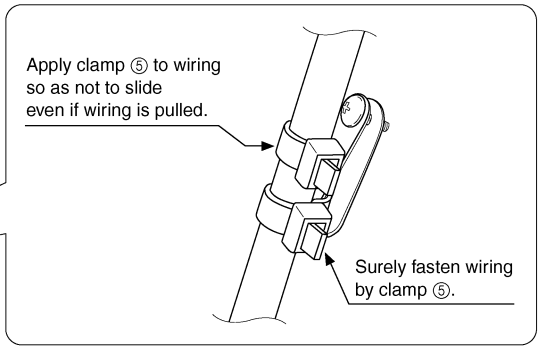


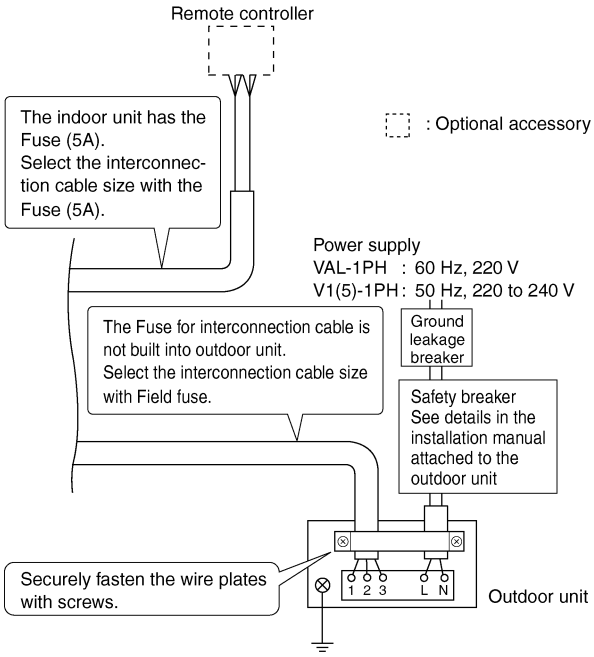


NOTE) When using the optional KRC47-1 or the KRC47-2 remote controllers, the air flow volume of "Medium" and "High" fan speed settings become the same.

- When using the optional KRC47-1 or the KRC47-2 remote controllers, which have three fan speed settings, refer to the following.

For an external static pressure of 0 to 2 mm $H_2O$

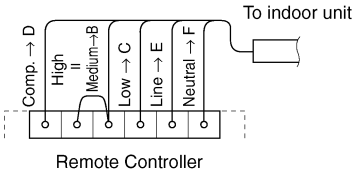


For an external static pressure of 2 to 7 mm $H_2O$

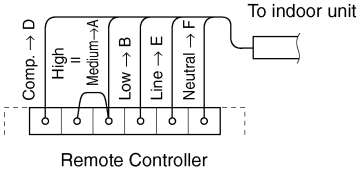


1PN07524

- Use ring type terminals for connections to the power supply terminal block.
  Where they can not be used, refer to the following.
- Observe the notes mentioned below while connecting wire to the power supply terminal board.
  Do not connect wires of different gauges to the same power supply terminal.
  (Looseness in the connection may cause overheating.)
  When connecting wires of the same gauge, connect them according to the figure on the right.

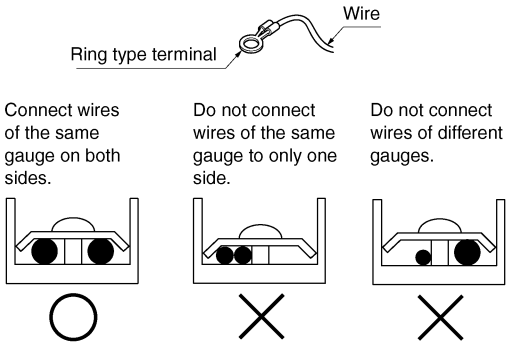


- Indoor unit

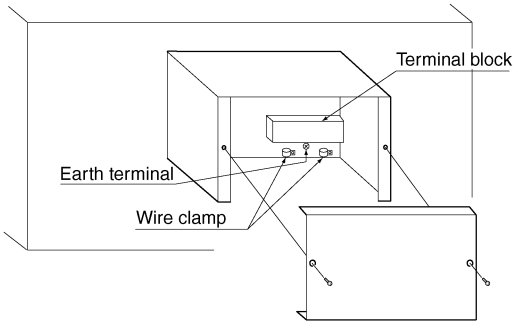


## 7 Finishing the Piping Connections

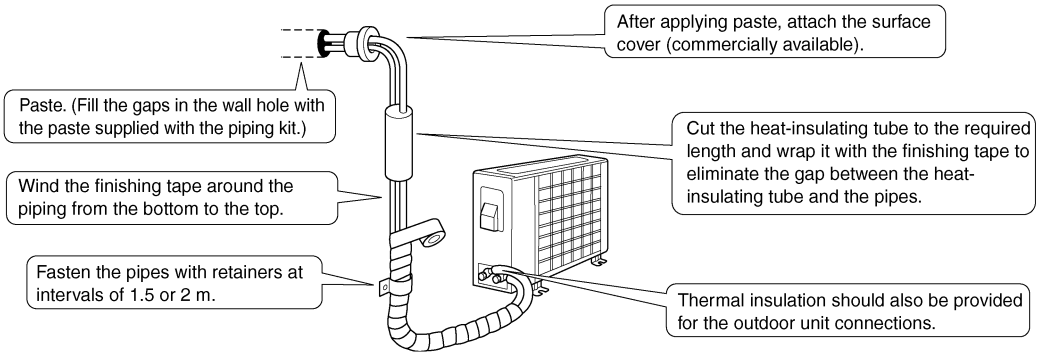


1PN07524

## 1.4 FDMG-NUV1

### 1.4.1 Installation

DAIKIN

# AIR CONDITIONER INSTALLATION MANUAL

FDMG 26 . 30 . 36 . 42 . 48 . 51 . 56 NUV1

READ THESE INSTRUCTIONS CAREFULLY BEFORE INSTALLATION.
KEEP THIS MANUAL IN A HANDY PLACE FOR FUTURE REFERENCE.

THIS INSTALLATION MANUAL IS FOR INDOOR UNIT ONLY.

FOR OUTDOOR UNIT, PLEASE SEE THE INSTALLATION MANUAL WHICH IS ATTACHED TO OUTDOOR UNIT.

1PN11002-1

2

**SAFETY CONSIDERATIONS**

Please read these “SAFETY CONSIDERATIONS” carefully before installing air conditioning equipment and be sure to install it correctly. After completing the installation, make sure that the unit operates properly during the start-up operation. Please instruct the customer on how to operate the unit and keep it maintained.After completing installation, conduct a trial operation to check for faults and explain to the customer how to operate the air conditioner and take care of it with the aid of operation manual. Ask the customer to store the installation manual along with the operation manual for future reference.
This air conditioner comes under the term "appliances not accessible to the general public".
In a domestic environment this product may cause radio interference in which case the user may be required to take adequate measures.

**Meaning of warning and caution symbols**

⚠ **WARNING**

Failure to follow these instructions properly may result in personal injury or loss of life.

⚠ **CAUTION**

Failure to observe these instructions properly may result in property damage or personal injurly, which may be serious depending on the circumstances.

**⚠ WARNING**

- Ask your dealer or qualified personal to carry out installation work.
  Do not attempt to install the air conditioner yourself. Improper installation may result in water leakage, electric shocks or fire.
- Perform installation work in accordance with this installation manual.
  Improper installation may result in water leakage, electric shocks or fire.
- Consult your local dealer regarding what to do in case of refrigerant leakage, when the air coditioner is to be installed in a small room, it is necessary to take proper measures so that the amount of any leaked refrigerant does not exceed the concentration limit in the event of leakage. Otherwise, this may lead to an accident due to oxygen depletion.
- Be sure to use only the specified accessories and parts for installation work.
  Failure to use the specified parts may result in water leakage, electric shocks, fire or the unit falling.
- Install the air conditioner on a foundation strong enough to withstand the weight of the unit.
  A foundation of insufficient strength may result in the equipment falling and causing injuries.
- Carry out the specified installation work after taking into account strong winds, typhoons or earthquakes.
  Improper installation work may result in the equipment falling and causing accidents.
- Make sure that a separate power supply circuit is provided for this unit and that all electrical work is carried out by qualified personnel according to local laws and regulations and this installation manual.
  An insufficient power supply capacity or improper electrical construction may lead to electric shocks or fire.
- Make sure that all wiring is secured,the specified wires are used, and that there is no strain on the terminal connections or wires. Improper connections or securing of wires may result in abnormal heat build-up or fire.
- When wiring the power supply and connecting the wiring between the indoor and outdoor units, position the wires so that the control box lid can be securely fatened. Improper positoning of the control box lid may result in electric shocks, fire or overheating terminals
- If the refrigerant gas leaks during installation, ventilate the area immediately.
  Toxic gas may be produced if the refrigerant gas comes into contact with fire.
- After completing the installation work, check that the refrigerant gas does not leak.
  Toxic gas may be produced if the refrigerant gas leaks into the room and comes into contact with a source of fire, such as a fan heater, stove or cooker.
- Before touching electrical parts, turn off the unit.
- Do not directly touch refrigerant that has leaked from refrigerant pipes or other areas, as there is a danger of frostbite.
- Do not allow children to climb on the outdoor unit and avoid placing objects on the unit.
  Injury may result if the unit becomes loose and falls.

1PN11002

## ⚠ CAUTION

- Ground the air conditioner.
  Do not connect the ground wire to gas or water pipes, a lightning conductor or a telephone ground wire.
  Incomplete grounding may result in electric shocks.
- Be sure to install an earth leakage breaker.
  Failure to install an earth leakage breaker may result in electric shocks.
- While following the instructions in this installation manual, install drain piping in order to ensure proper drainage and insulate piping in order to prevent condensation.
  Improper drain piping may result in water leakage and property damage.
- Make sure to provide for adequate measure in order to prevent that the outdoor unit be used as a shelter by small animals.
- Small animals making contact with electrical parts can cause malfunctions, smoke or fire. Please instruct the customer to keep the area around the unit clean.
- Install in a machine room that is free of moisture. The unit is designed for indoor use.
- Install the indoor and outdoor units, power cord and connecting wires at least 1 meter away from televisions or radios in order to prevent image interference or noise.
  (Depending on the radio waves, a distance of 1 meter may not be sufficient enough to eliminate noise.)
- Remote controller (wireless kit) transmitting distance can be shorter than expeced in rooms with electronic fluorescent lamps (inverter or rapid start types) Install the indoor unit as far away from fluorescent lamps as posible.
- Do not install the air conditioner in the following locations:
  (a) Where a mineral oil mist or an oil spray or vapor is produced, for example in a kitchen, plastic parts may deteriorate and fall off or result in water leakage.
  (b) Where corrosive gas, such as sulfurous acid gas, is produced, corroding copper pipes or soldered parts may result in refrigerant leakage.
  (c) Near machinery emitting electromagnetic waves.
  Electromagnetic waves may disturb the operation of the control system and result in a malfunction of the equipment.
  (d) Where flammable gases may leak, where there are carbon fiber or ignitable dust suspensions in the air, or where volatile flammables such as thinner or gasoline are handled.
  Operating the unit in such conditions may result in fire.
  (e) Where it is very humid, for example where there is steam or where water always accumulates on the floor.
  Operating the unit in such conditions may result in electric leakage or shock due to deterioration of the insulation resistance.
  (f) Where ambient air is so dusty that dust lay on the indoor unit. Drain piping may be clogged with dust and may result in water leakage and property damage.
- In humid environments, use an extra drain pan (field supplied) to cover the entire area of the indoor unit.
- Be sure to attach the air filters (field supplied) inside the suction passage.
  Failure to attach them may result in a malfunction of the equipment.
- **Disposal requirements**
  Dismantling of the unit, treatment of the refrigerant, of the oil and of other parts must be done in accordance with relevant local and national legislation.

### ACCESSORIES

Check if the following are included with your unit.

| Name | ① Installation manual | ② Operation manual | Insulation for fitting | ⑤ Sealing pad | ⑥ Clamp | ⑦ Washer for hanging bracket |
|---|---|---|---|---|---|---|
| Quantity | 1 | 1 | 1 each | 1pc. | 8pcs. | 8pcs. |
| Shape | | | ③ For gas pipe<br>④ For liquid pipe | | | |

### OPTIONS

The following optional remote controller is available for this indoor unit.

| | |
|---|---|
| Remote controller | KRC47-1 |
| | BRC1NU62 |
| Digital remote controller | KRC47-2 |
| | BRC1NU63 |
| Central remote controller | DTA107A61 |

NOTE) A commercially available remote controller can be used if its specifications are compatible with those shown in the wiring diagram and technical materials.

1PN11002

TAKE SPECIAL CARE DURING INSTALLATION AND CHECK THE FOLLOWING ITEMS AFTER INSTALLATION IS FINISHED.

| Items to be checked | Result of improper installation | Checked |
|---|---|---|
| Is the indoor unit securely installed? | The unit may drop, vibrate or make noise. | |
| Has the gas leak test been performed? | Insufficient cooling may result. | |
| Is the unit properly insulated? | Condensate may drip. | |
| Is the drain flow smooth? | Condensate may drip. | |
| Does the power supply voltage correspond to that shown on the name plate? | The unit may malfunction or components may burn out. | |
| Is the wiring and piping correct? | The unit may malfunction or components may burn out. | |
| Is the unit safely grounded? | Dangerous electric leakage may result. | |
| Are the wire sizes according to specifications? | The unit may malfunction or components may burn out. | |
| Are the air outlets and inlets of the indoor and outdoor units free of blockage? | Insufficient cooling may result. | |
| Are refrigerant piping lengths and additional refrigerant charges written down? | The system's refrigerant charge is not known. | |



## INSTALLING THE INDOOR UNIT

### 1 Selecting the Location

■ **Select an installation site that fulfills the following conditions and meets the customer's approval.**
- Optimum air distribution is ensured.
- The air passage is not blocked.
- Condensate can drain properly.
- The ceiling is strong enough to bear the weight of the indoor unit.
- A ceiling does not seem to be at an incline.
- Sufficient clearance for maintenance and servicing is ensured.
- Piping between the indoor and outdoor units is within the allowable limits. (Refer to the installation manual for the outdoor unit.)
- The indoor unit, outdoor unit, power supply wiring and transmission wiring is at least 1 meter away from televisions and radios. This prevents image interference and noise in electrical appliances. (Noise may be generated depending on the conditions under which the electric wave is generated, even if a one-meter allowance is maintained.)
- Ambient air of the indoor unit is not so dusty. Drain piping may be clogged with dust and may result in water leakage and property damage.
- In humid environments, use an extra drain pan (field supplied) to cover the entire area of the indoor unit.

■ **When exposing the body of this unit, install the unit where the bottom is move than 2.5 m high so that the user can not touch.**

■ **Use suspension bolts to install the unit. Check whether or not the ceiling is strong enough to support the weight of the unit. If there is a risk that the ceiling is not strong enough, reinforce the ceiling before installing the unit.**

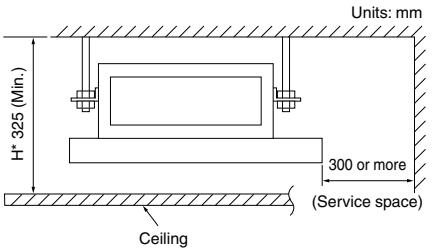


NOTES)
- Above H* is the minimum size of the indoor unit.
- Extra 20-30 mm is necessary to connect gas pipes. Determine size H* based on 1/100 of the required downward inclination indicated in "DRAIN PIPING WORK".

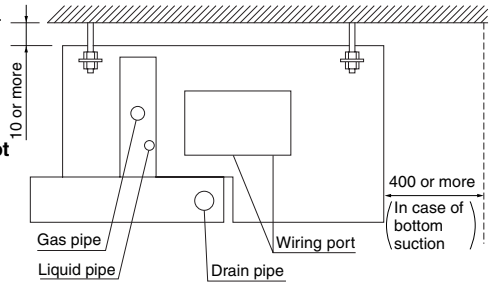


1PN11002

## 2 Preparations Before Installation

■ **Relation of the unit to the suspension bolt positions**

Units: mm

| Model | A | B |
|---|---|---|
| FDMG26NUV1 | 1203 | 1350 |
| FDMG30, 36, 42, 48NUV1 | 1403 | 1550 |
| FDMG51, 56NUV1 | 1753 | 1900 |

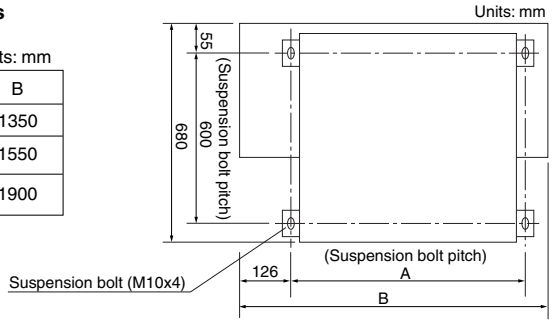


■ **Install the suspension bolts.**
(Use M10-size bolts for the suspension bolts.)
In order to reinforce the ceiling bearing the weight of the unit, use anchors when installing onto an existing ceiling or use sunken inserts, sunken anchors or other commercially available parts when installing onto a new ceiling.

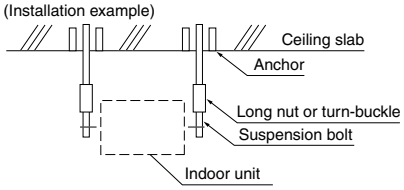


NOTE) All of the above parts are commercially available.

## 3 Indoor Unit Installation

■ **While installing unit, take care that dust etc. should not drop into the drain pan.**

■ **Temporarily install the indoor unit.**
- Attach the hanger brackets to the suspension bolts. Be sure to use nuts and washers both above and below the hanger brackets to secure them.

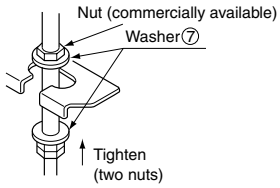


■ **Use a water level or water-filled vinyl tubes to check that the unit is level at all four corners as shown in the drawing.**

■ **Tighten the top nuts.**

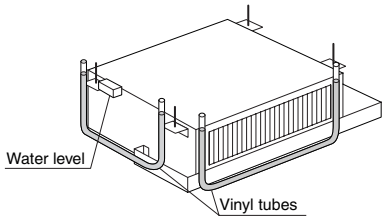


1PN11002

## 4 Refrigerant Piping Work

See the installation manual attached to the outdoor unit.
The outdoor unit is charged with refrigerant.

### ■ Providing the connecting piping between the indoor unit and the outdoor unit

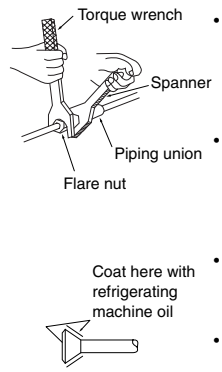


- Be sure to use both a spanner and a torque wrench together, as shown in the drawing, when connecting pipes to or disconnecting them from the unit.
- When connecting the flare nut, coat both the inside and outside with refrigerent machine oil. Then, tighten it 3 or 4 turns by hand before tightening it firmly.
- Refer to Table 1 to determine the power tightening torque. (Overtightening may damage the flare and cause leaks.)
- Check the pipe connections for gas leaks.

Table 1

| Pipe gauge (mm) | Tightening torque | Flare dimension B (mm) | Flare shape |
|---|---|---|---|
| ø6.4 | 14.2 to 17.2 N·m (144 to 176kgf·cm) | 8.6 to 9.0 | 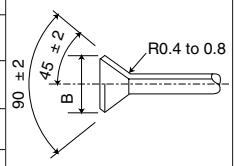 |
| ø9.5 | 32.7 to 39.9 N·m (333 to 407kgf·cm) | 12.6 to 13.0 | |
| ø12.7 | 49.5 to 60.3 N·m (504 to 616kgf·cm) | 15.8 to 16.2 | |
| ø15.9 | 61.8 to 75.4 N·m (630 to 770kgf·cm) | 19.0 to 19.4 | |
| ø19.1 | 97.2 to 118.8 N·m (990 to 1210kgf·cm) | 23.3 to 23.7 | |



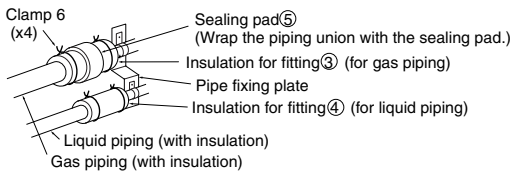


- Install the insulation as shown in the drawing above. (Install the insulation for the fittings attached to the pipe fixing plate.)
- Wrap the sealing pad⑤ around only the union of the gas piping (over the insulation for fitting ③).

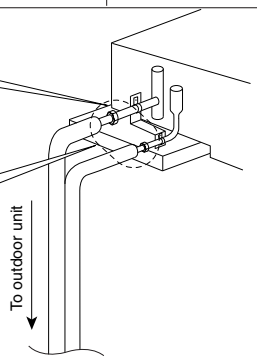


## 5 Drain Piping Work

### ■ Connect the drain pipe as described below

- It is necessary to clean the drain pan.
- The drain pipe outlet can be either on the right or left side.
- After making the connection, wrap the drain pipes completely with insulation.
- When connecting the drain pipe to the outlet on the left side, remove the rubber plug and attach it to the outlet on the right side.

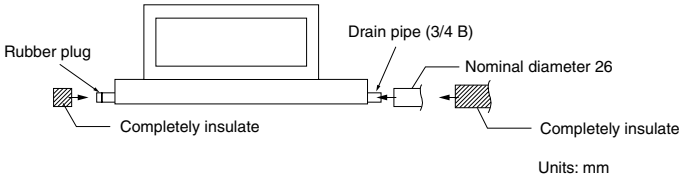


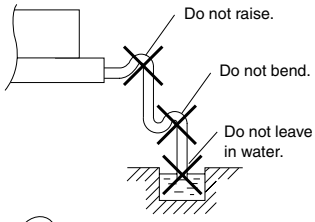


### ■ Pour some water into the drain pan to check that the water drains smoothly.

### ■ Make sure that water does not leak from the drain piping, connecting parts and the drain plug.

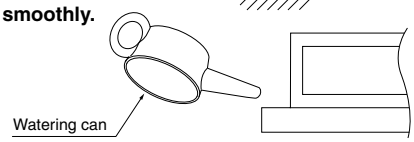


1PN11002

## 6 Wiring

See the installation manual attached to the outdoor unit.

**⚠ CAUTION**

Ground the air conditioner.
When grounding the air conditioner, use a ground wire of 100Ω or less.

### ■ Field wiring connection method

For details, follow the local applicable laws and regulations concerning electrical installations.

NOTE) A commercially available remote controller can be used if its specifications are compatible with those shown in the wiring diagram and technical materials.

**⚠ CAUTION**

Be sure to use a 3-minute delay timer when starting the compressor, otherwise the compressor may not start.

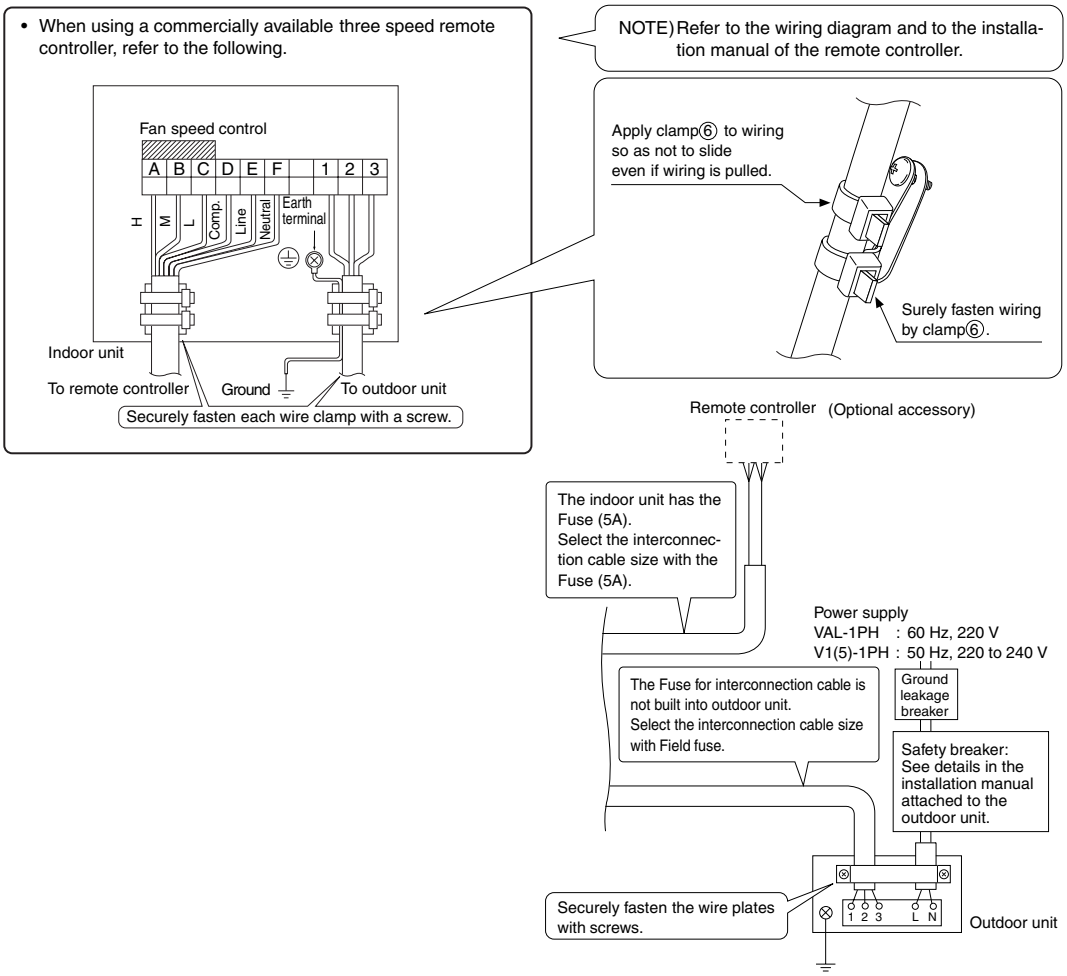


1PN11002

- When using the optional KRC47-1 or the KRC47-2 remote controllers, which have three fan speed settings, refer to the following.

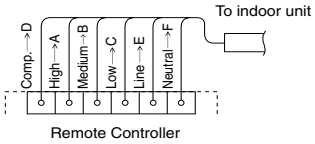


For more details, please see the manual of remote controller.

- Use ring type terminals for connections to the power supply terminal block.
  Where they can not be used, refer to the following.
- Observe the notes mentioned below while connecting wire to the power supply terminal board.
  Do not connect wires of different gauges to the same power supply terminal.
  (Looseness in the connection may cause overheating.)
  When connecting wires of the same gauge, connect them according to the figure on the right.

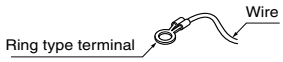


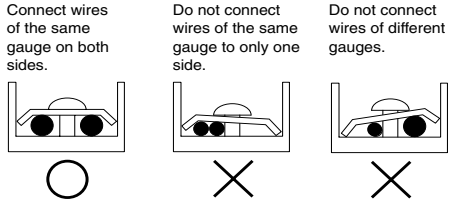


- Indoor unit

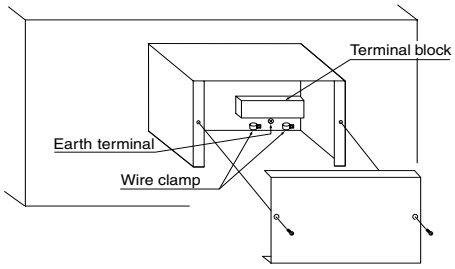


## 7 Finishing the Piping Connections

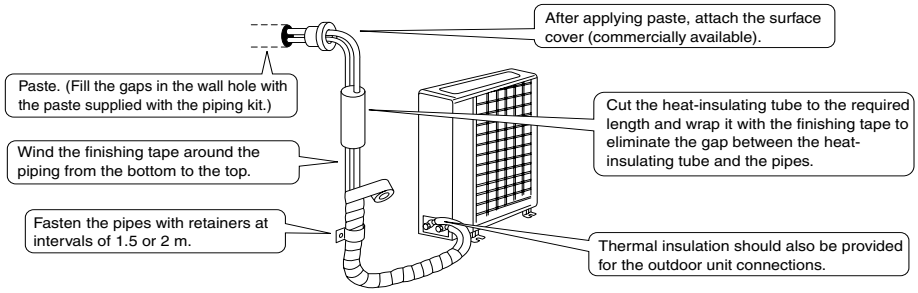


## 8 Operation Test

- Make sure all installation procedures have been completed to the specifications of the indoor unit, the outdoor unit, and the remote controller's installation manuals.
- Select the lowest temperature setting of the remote controller.
- Turn on the remote controller to check the air flow and cooling function.
- After completing the operation test, set the remote controller to an average temperature.
- Give the installation and operation manuals for the remote controller to the customer and explain how to operate it.

NOTE) The three minute timer delays the restart operation.

# INSTALLING THE OUTDOOR UNIT

See the installation manual attached to the outdoor unit.

1PN11002

# 2. Outdoor unit

## 2.1 R18NUV1 / R21NUV1

### 2.1.1 Installation

## Precautions on Installation

- Check the strength and level of the installation ground so that the unit will not cause any operating vibration or noise after installed.
- In accordance with the foundation drawing, fix the unit securely by means of the foundation bolts. (Prepare four sets of M8 or M10 foundation bolts, nuts and washers each which are available on the market.)
- It is best to screw in the foundation bolts until their length are 20 mm from the foundation surface.
- When installing the unit on the frame, fix water proof plate within 150 mm from the bottom of the unit to prevent water from entering.

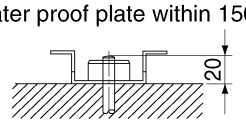


## Outdoor Unit Installation Drawings

| Model | R18 | R21 |
|---|---|---|
| Max. allowable length | 30 m | |
| Max. allowable height | 15 m | |
| Additional refrigerant required for refrigerant pipe exceeding 10 m in length. | 20g/m | |
| Gas pipe | O.D. 15.9 mm | |
| Liquid pipe | O.D. 6.4 mm | |
| X | 530 m | 540 m |
| Y | 100 m | 130 m |
| Z | 290 m | 330 m |

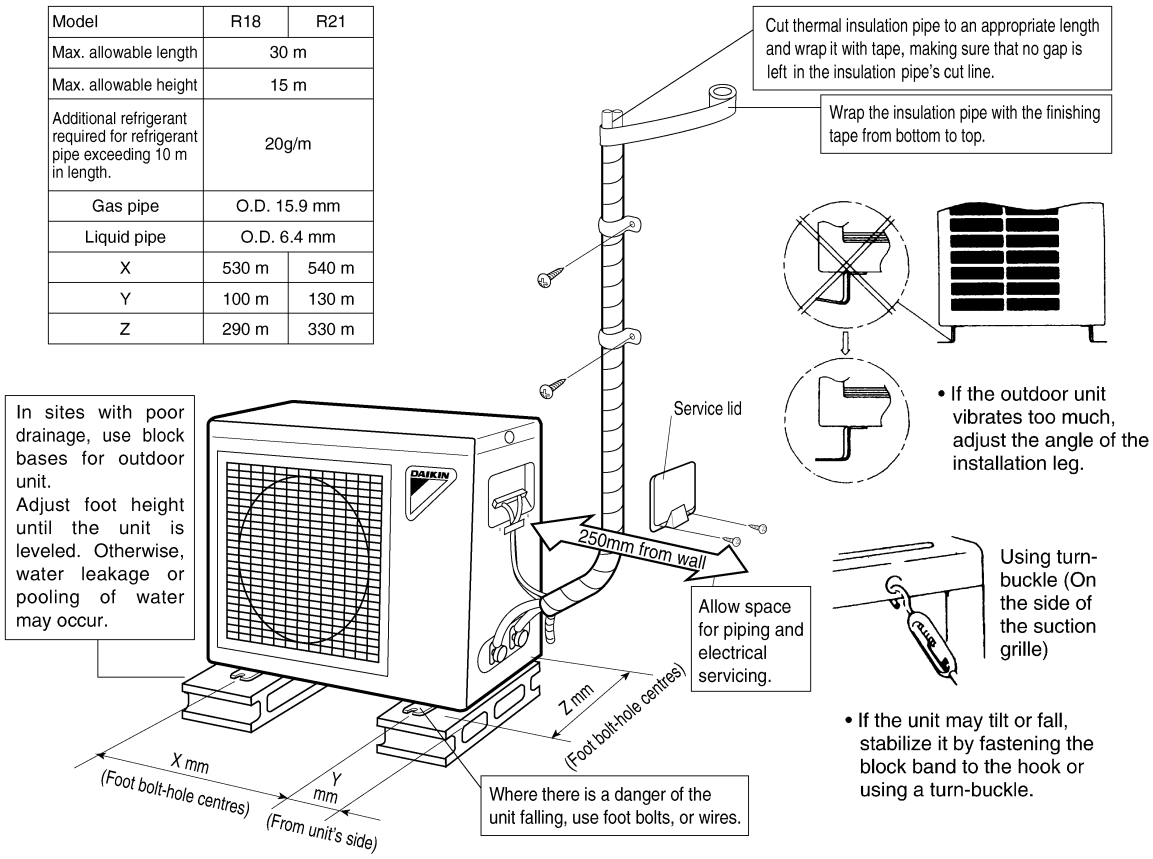


## Installation Guidelines

- Where a wall or other obstacle is in the path of outdoor unit's intake or exhaust airflow, follow the installation guidelines below.

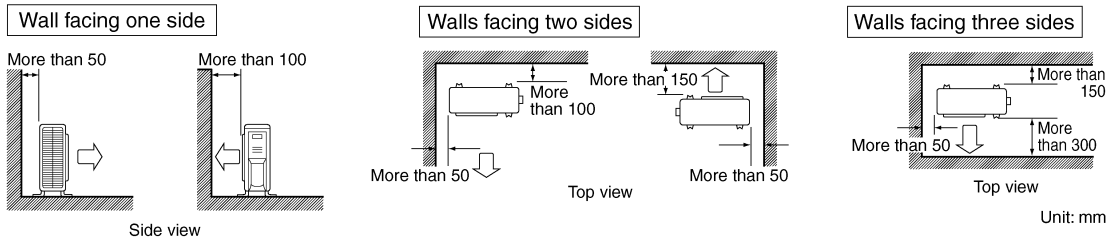


1PN07605

2

# Outdoor Unit Installation

## 1. Installing Outdoor Unit

1) When installing the outdoor unit, refer to “Precautions for Selecting the Location” and the “Outdoor Unit Installation Drawings.”
2) If drain work is necessary, follow the procedures below.

## 2. Drain Work

1) Use drain plug for drainage.
2) If the drain port is covered by a mounting base or floor surface, place additional foot bases of at least 30 mm in height under the outdoor unit’s feet.
3) In cold areas, do not use a drain hose with the outdoor unit.
(Otherwise, drain water may freeze, impairing heating performance.)

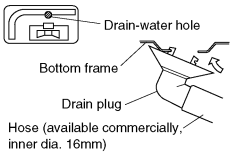


## 3. Flaring the Pipe End

1) Cut the pipe end with a pipe cutter.
2) Remove burrs with the cut surface facing downward so that the chips do not enter the pipe.
3) Put the flare nut on the pipe.
4) Flare the pipe.
5) Check that the flaring is properly made.

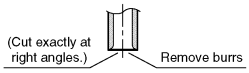


Flaring

Set exactly at the position shown below.

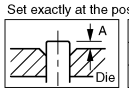


| | A |
|---|---|
| RIGID | 0.5 mm |
| IMPERIAL | 1.0 mm |

Check

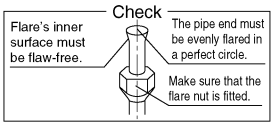


### ⚠ Warning

1) Incomplete flaring may cause refrigerant gas leakage.

## 4. Refrigerant Piping

1) Align the centres of both flares and tighten the flare nuts 3 or 4 turns by hand. Then tighten them fully with the torque wrenches.
   • Use torque wrenches when tightening the flare nuts to prevent damage to the flare nuts and escaping gas.
2) To prevent gas leakage, apply refrigeration machine oil on both inner and outer surfaces of the flare. (Use refrigeration oil for R-22)

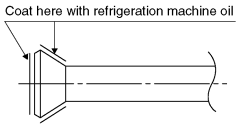


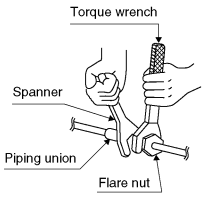


| Flare nut tightening torque | | | |
|---|---|---|---|
| Gas side | | Liquid side | |
| 1/2 inch (Ø12.7 mm) | 5/8 inch (Ø15.9 mm) | 1/4 inch (Ø 6.4 mm) | 3/8 inch (Ø 9.5 mm) |
| 49.5~60.3N • m (505~615kgf • cm) | 61.8~75.4N • m (630~770kgf • cm) | 14.2~17.2N • m (144~175kgf • cm) | 32.7~39.9N • m (333~407kgf • cm) |

| Valve cap tightening torque | | | |
|---|---|---|---|
| Gas side | | Liquid side | |
| 1/2 inch (Ø12.7 mm) | 5/8 inch (Ø15.9 mm) | 1/4 inch (Ø 6.4 mm) | 3/8 inch (Ø9.5 mm) |
| 48.1~59.7N • m (490~610kgf • cm) | 44.1~53.9N • m (450~550kgf • cm) | 21.6~27.4N • m (220~280kgf • cm) | |

| | |
|---|---|
| Service port cap tightening torque | 10.8~14.7N • m (110~150kgf • cm) |

1PN07605

# Outdoor Unit Installation

## 5. Purging Air and Checking Gas Leakage

- When piping work is completed, it is necessary to purge the air and check for gas leakage.

**⚠ Warning**

1) Do not mix any substance other than the specified refrigerant (R-22) into the refrigeration cycle.
2) To prevent air pollution, a vacuum pump should be used for air purging wherever possible.
3) Refrigerant gas leaks during air purging, ventilate the room as soon as possible.
4) Use a vacuum pump for R-22 exclusively. Using the same vacuum pump for different refrigerants may damage the vacuum pump or the unit.

- If using additional refrigerant, perform air purging from the refrigerant pipes and indoor unit using a vacuum pump, then charge additional refrigerant.
- Use a hexagonal wrench (4 mm) to operate the shut-off valve rod.
- All refrigerant pipe joints should be tightened with a torque wrench at the specified tightening torque.

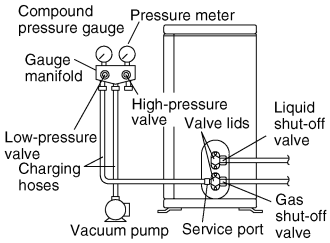


1) Connect projection side (on which worm pin is pressed) of charging hose (which comes from gauge manifold) to gas shut-off valve's service port.

↓

2) Fully open gauge manifold's low-pressure valve (Lo) and completely close its high-pressure valve (Hi). (High-pressure valve subsequently requires no operation.)

↓

3) Do vacuum pumping and make sure that the compound pressure gauge reads – 0.1MPa (– 76 cmHg)*1.

↓

4) Close gauge manifold's low-pressure valve (Lo) and stop vacuum pump. (Keep this state for a few minutes to make sure that the compound pressure gauge pointer does not swing back.)*2.

↓

5) Remove valve lids from liquid shut-off value and gas shut-off valve.

↓

6) Turn the liquid shut-off valve's rod 90 degrees counterclockwise with a hexagonal wrench to open valve. Close it after 5 seconds, and check for gas leakage. Using soapy water, check for gas leakage from indoor unit's flare and outdoor unit's flare and valve rods. After the check is complete, wipe all soapy water off.

↓

7) Disconnect charging hose from gas shut-off valve's service port, then fully open liquid and gas shut-off valves. (Do not attempt to turn valve rod beyond its stop.)

↓

8) Tighten valve lids and service port cap for the liquid and gas shut-off valves with a torque wrench at the specified torques.

*1. Pipe length vs. vacuum pump run time

| Pipe length | Up to 15 metres | More than 15 metres |
|---|---|---|
| Run time | Not less than 10 min. | Not less than 15 min. |

*2. If the compound pressure gauge pointer swings back, refrigerant may have water content or a loose pipe joint may exists. Check all pipe joints and retighten nuts as needed, then repeat steps 2) through 4).

1PN07605

# Outdoor Unit Installation

## 6. Refrigerant Piping Work

### 6-1 Cautions on Pipe Handling

1) Protect the open end of the pipe against dust and moisture.
2) All pipe bends should be as gentle as possible. Use a pipe bender for bending.
   (Bending radius should be 30 to 40 mm or larger.)

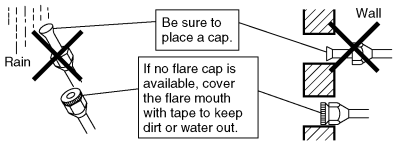


### 6-2 Selection of Copper and Heat Insulation materials

When using commercial copper pipes and fittings, observe the following:

1) Insulation material: Polyethylene foam
   Heat transfer rate: 0.041 to 0.052W/mK (0.035 to 0.045 kcal/mh˚C)
   Refrigerant gas pipe's surface temperature reaches 110˚C max.
   Choose heat insulation materials that will withstand this temperature.
2) Be sure to insulate both the gas and liquid piping and to provide insulation dimensions as below.

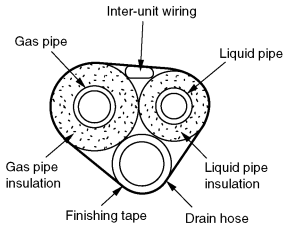


| R18~21 | | | |
|---|---|---|---|
| Gas side | Liquid side | Gas pipe thermal insulation | Liquid pipe thermal insulation |
| O.D. 15.9mm | O.D. 6.4mm | I.D. 16-20mm | I.D. 8-10mm |
| Thickness 1.0mm | Thickness 0.8mm | Thickness 10mm Min. | |

3) Use separate thermal insulation pipes for gas and liquid refrigerant pipes.

1PN07605

# Wiring

## ⚠ Warning

Do not use tapped wires, stand wires, extensioncords, or starbust connections, as they may cause overheating, electrical shock, or fire.

- Do not turn ON the safety breaker until all work is completed.
  1) Strip the insulation from the wire (20 mm).
  2) Connect the connection wires between the indoor and outdoor units **so that the terminal numbers match**. Tighten the terminal screws securely. We recommend a flathead screwdriver be used to tighten the screws.

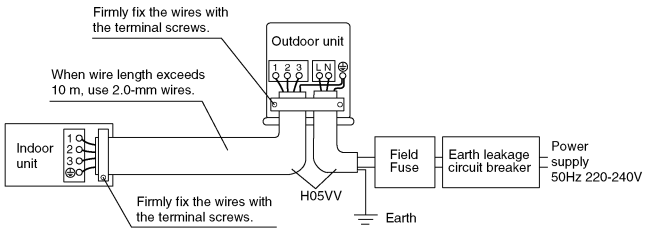


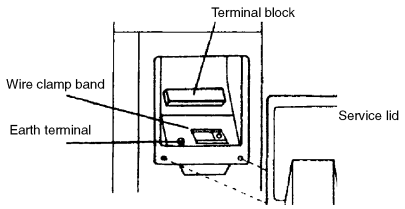


• Regarding the interconnecting and power cables.

Specifications of standard wiring components

| Model | Power Supply | | | Wire type of wiring between the units |
|---|---|---|---|---|
| | Field fuse | Wire type | Size | |
| R18NUV1(5) | 20A | H05VV-U3G | Wiring size must comply with the applicable local and national code | H05VV-U4G2.5 |
| R21NUV1(5) | 25A | H05VV-U3G | | H05VV-U4G2.5 |

Observe the notes mentioned below when wiring to the power supply terminal board.
Precautions to be taken for power supply wiring.
(Use a round crimp-style terminal for connection to the power supply terminal board. In case it cannot be used due to unavoidable reasons, be sure to observe the following instruction.)

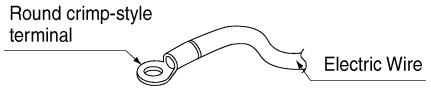


## ⚠ Caution

When connecting the connection wires to the terminal board using a single core wire, be sure to perform curling. Problems with the work may cause heat and fires.

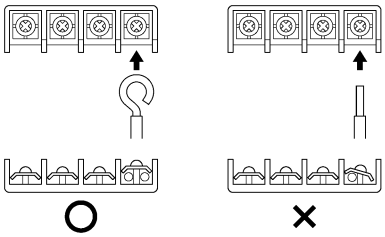


Stripping wire at terminal block

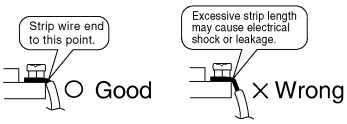


3) Pull the wire and make sure that it does not disconnect. Then fix the wire in place with a wire stop.

1PN07605

## 2.2 R26NUV1 / R26NUY1 / R30NUV1 / R30NUY1 / R36NUV1 / R36NUY1 / R42NUY1 / R48NUY1 / R51NUY1 / R56NUY1

### 2.2.1 Installation

DAIKIN

# Air Conditioner

<Cooling only> R26NUV1, R26NUY1, R30•36NUV1, R30•36•42•48•51•56NUY1

# Outdoor unit INSTALLATION MANUAL

READ THESE INSTRUCTIONS CAREFULLY BEFORE INSTALLATION.
KEEP THIS MANUAL IN A HANDY PLACE FOR FUTURE REFERENCE.

1PN07127-1C

## SAFETY CONSIDERATIONS

Please read these “SAFETY CONSIDERATIONS” carefully before installing air conditioning equipment and be sure to install it correctly. After completing the installation, make sure that the unit operates properly during the start-up operation. Please instruct the customer on how to operate the unit and keep it maintained. Also, inform customers that they should store this installation manual along with the operation manual for future reference.
After completing installation, conduct a trial operation to check for faults and explain to the customer how to operate the air conditioner and take care of it with the aid of operation manual. Ask the customer to store the installation manual along with the operation manual for future reference.
This air conditioner comes under the term “appliances not accesible to the general public”.
In a domestic environment this product may cause radio interference in which case the user may be required to take adequate measures.
Meaning of warning and caution symbols.

⚠ **WARNING** ..... Failure to follow these instructions properly may result in personal injury or loss of life.

⚠ **CAUTION** ..... Failure to observe these instructions properly may result in property damage or personal injurly, which may be serious depending on the circumstances.

## ⚠ WARNING

- Ask your dealer or qualified personal to carry out installation work.
  Do not attempt to install the air conditioner yourself. Improper installation may result in water leakage, electric shocks or fire.
- Perform installation work in accordance with this installation manual.
  Improper installation may lead to water leakage, electric shocks or fire.
- Consult your local dealer regarding what to do in case of refrigerant leakage, when the air coditioner is to be installed in a small room, it is necessary to take proper measures so that the amount of any leaked refrigerant does not exceed the concentration limit in the event of leakage. Otherwise, this may lead to an accident due to oxygen depletion.
- Be sure to use only the specified accessories and parts for installation work.
  Failure to use the specified parts may result in water leakage, electric shocks, fire or the unit falling.
- Install the air conditioner on a foundation strong enough to withstand the weight of the unit.
  A foundation of insufficient strength may result in the equipment falling and causing injuries.
- Carry out the specified installation work after taking into account strong winds, typhoons or earthquakes.
  Improper installation work may result in the equipment falling and causing accidents.
- Make sure that a separate power supply circuit is provided for this unit and that all electrical work is carried out by qualified personnel according to local laws and regulations and this installation manual.
  An insufficient power supply capacity or improper electrical construction may lead to electric shocks or fire.
- Make sure that all wiring is secured,the specified wires are used, and that there is no strain on the terminal connections or wires. Improper connections or securing of wires may result in abnormal heat build-up or fire.
- When wiring the power supply and connecting the wiring between the indoor and outdoor units, position the wires so that the control box lid can be securely fatened. Improper positoning of the control box lid may result in electric shocks, fire or overheating terminals.
- If the refrigerant gas leaks during installation, ventilate the area immediately.
  Toxic gas may be produced if the refrigerant gas comes into contact with fire.
- After completing the installation work, check that the refrigerant gas does not leak.
  Toxic gas may be produced if the refrigerant gas leaks into the room and comes into contact with a source of fire, such as a fan heater, stove or cooker.
- Before touching electrical parts, turn off the unit.
- Do not directly touch refrigerant that has leaked from refrigerant pipes or other areas, as there is a danger of frostbite.
- Do not allow children to climb on the outdoor unit and avoid placing objects on the unit. Injury may result if the unit becomes loose and falls.

1PN07127C

## ⚠ CAUTION

- Ground the air conditioner.
  Do not connect the earth wire to gas or water pipes, lightning conductor or telephone earth wire. Incomplete grounding may cause electric shocks.
  - Gas pipe — Ignition or explosion may occur if the gas leaks.
  - Water pipe — Hard vinyl tubes are not effective grounds.
  - Lightning conductor or telephone ground wire.
    — Electric potential may rise abnormally if struck by a lightning bolt.

- Be sure to install an earth leakage breaker.
  Failure to install an earth leakage breaker may result in electric shocks or fire.
- While following the instructions in this installation manual, install drain piping in order to ensure proper drainage and insulate piping in order to prevent condensation.
  Improper drain piping may result in water leakage and property damage.
- Make sure to provide for adequate measure in order to prevent that the outdoor unit be used as a shelter by small animals.
- Small animals making contact with electrical parts can cause malfunctions, smoke or fire. Please instruct the customer to keep the area around the unit clean.
- Install in a machine room that is free of moisture. The unit is designed for indoor use.
- Install the indoor and outdoor units, power cord and connecting wires at least 1 meter away from televisions or radios in order to prevent image interference or noise.
  (Depending on the radio waves, a distance of 1 meter may not be sufficient enough to eliminate the noise.)
- Do not install the air conditioner in the following locations:
  (a) where a mineral oil mist or an oil spray or vapor is produced, for example in a kitchen
  Plastic parts may deteriorate and fall off or result in water leakage.
  (b) where corrosive gas, such as sulfurous acid gas, is produced
  Corroding copper pipes or soldered parts may result in refrigerant leakage.
  (c) near machinery emitting electromagnetic waves
  Electromagnetic waves may disturb the operation of the control system and result in a malfunction of the equipment
  (d) where flammable gases may leak, where there are carbon fiber or ignitable dust suspensions in the air, or where volatile flammables such as thinner or gasoline are handled.
  Operating the unit in such conditions may result in fire.
- Do not wash the air conditioner, may cause electric shocks.
- **Disposal requirements**
  Dismantling of the unit, treatment of the refrigerant, of the oil and of other parts must be done in accordance with relevant local and national legislation.

## NOTE

- For details on installing the indoor unit, refer to the installation manual supplied with the indoor unit.
- The illustrations are for the R42 type models, but they apply to other models as well.
- Never remove the thermistor (Q1) in the discharge pipe, otherwise the compressor could be burn out.

## CONFIRMATION OF ACCESSORIES

- Check that the following accessories are present. If shortage occurred, please contact us.
  - Installation Manual..... 1pc.
  - Clamp material.....2pcs. (For R56, there are screw M5 4pcs. instead)
- The indoor unit requires a remote controller (Optional accessory).

1PN07127C

## 1 CARRYING-IN

- Take care not let your hands and other objects touch the rear fins. ⚠WARNING
  Carry in the equipment slowly, using the grips provided on the sides.

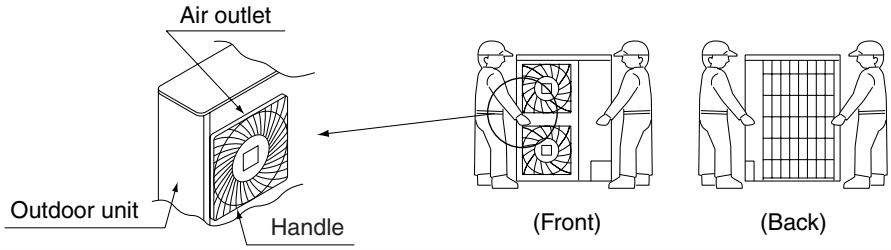


- Place your hands on the corner instead of holding the suction inlet in the side of the casing, otherwise the casing could be deformed.

## 2 SELECTION OF INSTALLATION SITE

1. Select a site where the following conditions can be satisfied and make sure the customer agrees to it.
   - where the space is well ventilated
   - where the unit does not cause a trouble to the neighbors
   - where the unit can be installed safely on a level base which withstand the weight and vibration
   - where the rain can be avoided as much as possible
   - where the sufficient space for installation is available
   - where the piping and wiring length between the indoor and outdoor unit is within the allowable distance
   - where there is no danger of flammable gas leak
2. If the unit is to be installed where the strong wind may affect the unit, give consideration to the following cautions. When the wind stronger than 5m/sec blows on the air outlet of the outdoor unit, the air flow rate may decrease or the exhaust air may recirculate (short circuit) and as a consequence the following results may occur.
   - The insufficient capacity
   - The rise of high pressure which cause to stop the operation
   - If wind blows continuously and directly into the outdoor unit air outlet with excessive force, there is the danger that the fan will rotate in reverse at high speed, damaging the unit. Be sure to refer to the diagram below when installing.

   If the wind direction is predictable, install the equipment as shown below.

   - Face the air outlet to the wall or windbreak screen.
   - Orient the unit so that the air flow outlet is at right angles to the wind direction.

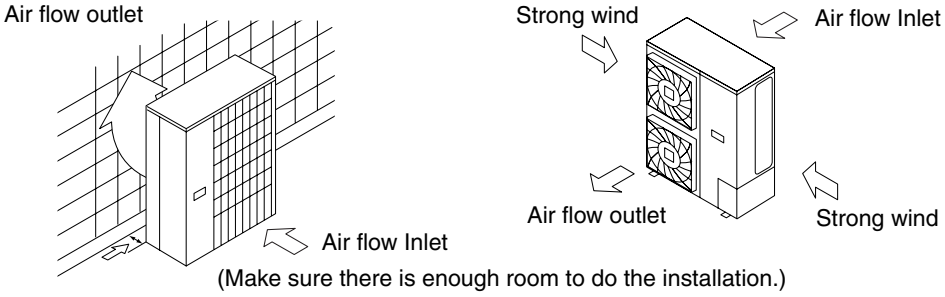


(Make sure there is enough room to do the installation.)

3. If the local codes restrict the installation height from the ground level, follow the local codes at installation.

1PN07127C

## 3 INSTALLATION SERVICE SPACE

- The values represent the case for the R26 type through R56 type. The dimensions in ( ) are for R36~56. (The unit of the values is mm) In case of R56 model, the values in < > are those when the air discharge direction of the grille is set downward.
  (Refer to **"4. PRECAUTIONS ON INSTALLATION"** Installation Notes.)

**1. Where there is an obstacle on the suction side:**

**(a) No obstacle above**

(1) Stand-alone installation

- Obstacle on the suction side only

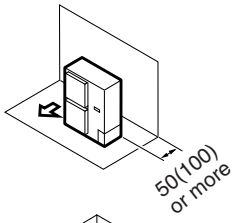


- Obstacle on both sides

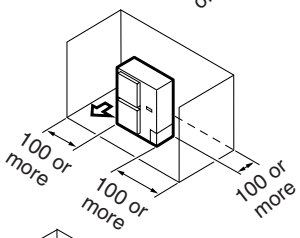


(2) Series installation
(2 or more)

- Obstacle on both sides

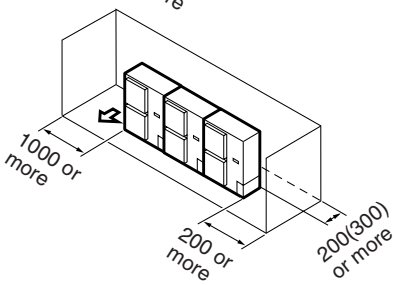


**(b) Obstacle above, too**

(1) Stand-alone installation

- Obstacle on the suction side, too

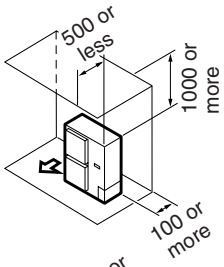


- Obstacle on the suction side and both sides

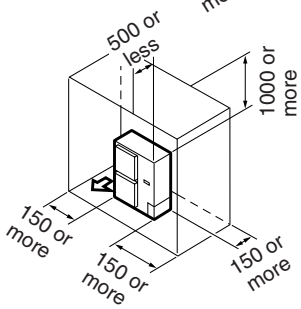


1PN07127C

(2) Series installation
(2 or more)
• Obstacle on the suction side and both sides

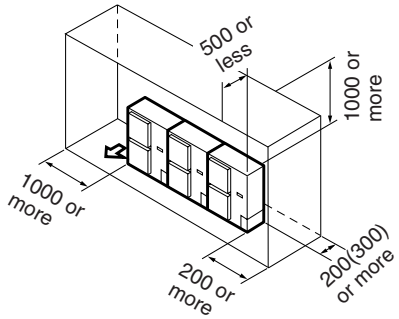


**2. Where there is an obstacle on the discharge side:**

**(a) No obstacle above**

(1) Stand-alone installation

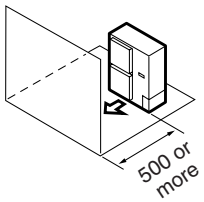


(2) Series installation
(2 or more)

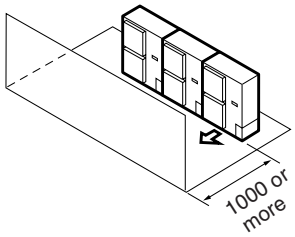


**(b) Obstacle above, too**

(1) Stand-alone installation

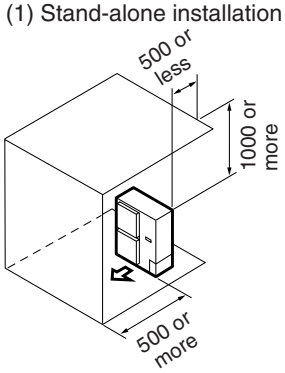


(2) Series installation
(2 or more)

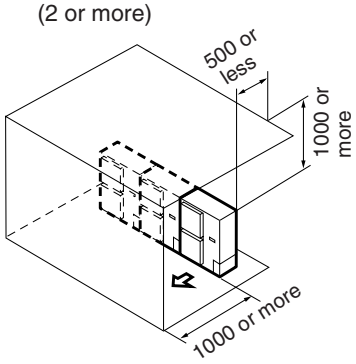


**3. Where there are obstacles on both suction and discharge sides:**

**Pattern 1** Where the obstacles on the discharge side is higher than the unit:
(There is no height limit for obstructions on the intake side.)

**(a) No obstacle above**

(1) Stand-alone installation

L > H

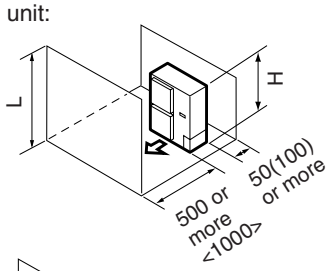


(2) Series installation
(2 or more)

L > H

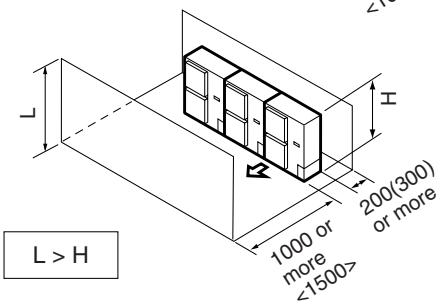


1PN07127C

**(b) Obstacle above, too**

(1) Stand-alone installation

The relations between H, A and L are as follows:

| | L | A |
|---|---|---|
| L ≤ H | 0 < L ≤ 1/2H | 750 <1250> |
| | 1/2H < L ≤ H | 1000 <1500> |
| L > H | Set the stand as:L ≤ H. | |

Close the bottom of the installation frame to prevent the discharged air from being bypassed.

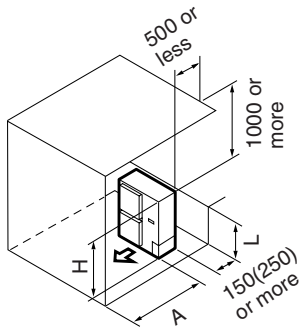


(2) Series installation

The relations between H, A and L are as follows:

| | L | A |
|---|---|---|
| L ≤ H | 0 < L ≤ 1/2H | 1000 <1500> |
| | 1/2H < L ≤ H | 1250 <1750> |
| L > H | Set the stand as:L ≤ H. | |

Close the bottom of the installation frame to prevent the discharged air from being bypassed.

Only two units can be installed for this series.

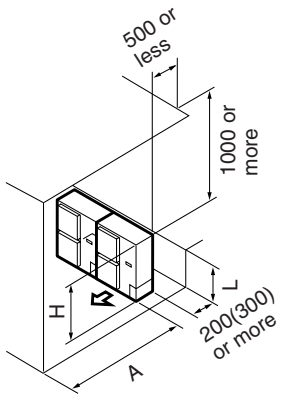


**Pattern 2** Where the obstacle on the discharge side is lower than the unit:
(There is no height limit for obstructions on the intake side.)

**(a) No obstacle above**

(1) Stand-alone installation

L ≤ H

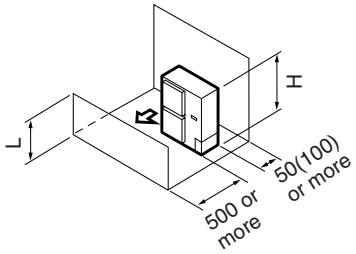


(2) Series installation
(2 or more)

The relations between H, A and L are as follows:

| L | A |
|---|---|
| 0 < L ≤ 1/2H | 150 (250) <250> |
| 1/2H < L ≤ H | 200 (300) <300> |

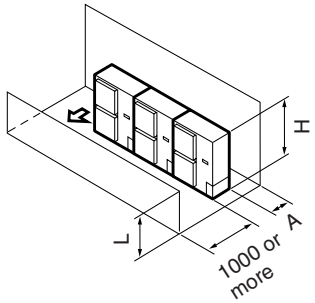


1PN07127C

**(b) Obstacle above, too**

(1) Stand-alone installation

The relations between H, A and L are as follows:

| | L | A |
|---|---|---|
| L ≤ H | 0 < L ≤ 1/2H | 50 (100) <100> |
| | 1/2H < L ≤ H | 100 (200) <200> |
| L > H | Set the stand as:L ≤ H. | |

Close the bottom of the installation frame to prevent the discharged air from being bypassed.

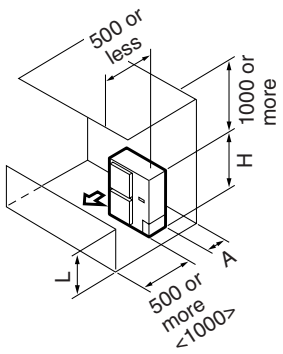


(2) Series installation

The relations between H, A and L are as follows:

| | L | A |
|---|---|---|
| L ≤ H | 0 < L ≤ 1/2H | 150 (250) <250> |
| | 1/2H < L ≤ H | 200 (300) <300> |
| L > H | Set the stand as:L ≤ H. | |

Close the bottom of the installation frame to prevent the discharged air from being bypassed.
Only two units can be installed for this series.

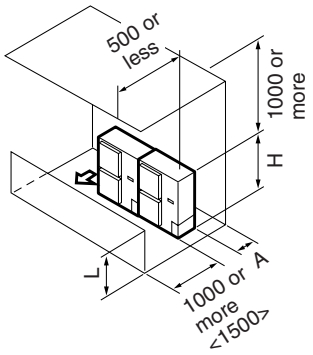


**4. Double-decker installation**

(a) Obstacle on the discharge side

Close the gap A (the gap between the upper and lower outdoor units) to prevent the discharged air from being bypassed.

Do not stack more than two units.

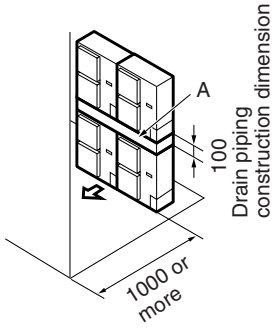


(b) Obstacle on the suction side

Close the gap A (the gap between the upper and lower outdoor units) to prevent the discharged air from being bypassed.

Do not stack more than two units.

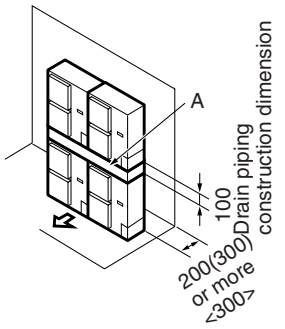


1PN07127C

**5. Multiple rows of series installation (on the rooftop, etc.)**

(a) One row of stand-alone installation

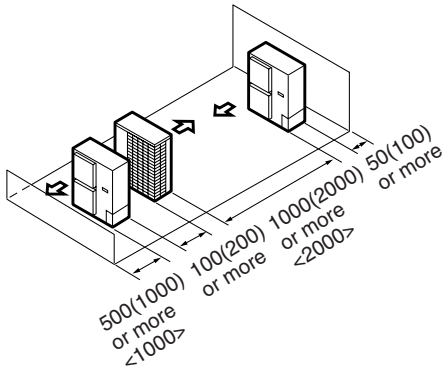


(b) Rows of series installation (2 or more)

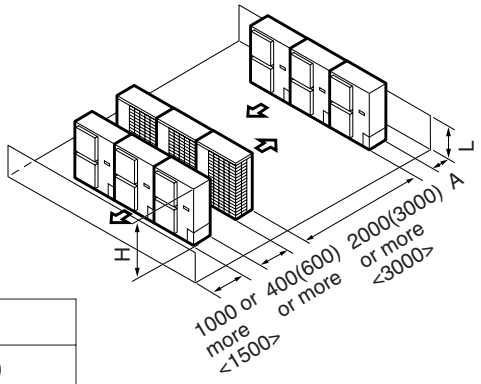


The relations between H, A and L are as follows:

| | L | A |
|---|---|---|
| L ≤ H | 0 < L ≤ 1/2H | 150 (200) |
| | 1/2H < L ≤ H | 200 (300) |
| L > H | Cannot be installed. | |

unit:mm

## 4 PRECAUTIONS ON INSTALLATION

- Check the strength and level of the installation ground so that the unit will not cause any operating vibration or noise after installed.
- In accordance with the foundation drawing in Fig. 1, fix the unit securely by means of the foundation bolts (Prepare four sets of M12 foundation bolts, nuts and washers each which are available in the market.)
- It is best to screw in the foundation bolts until their length are 20 mm from the foundation surface.

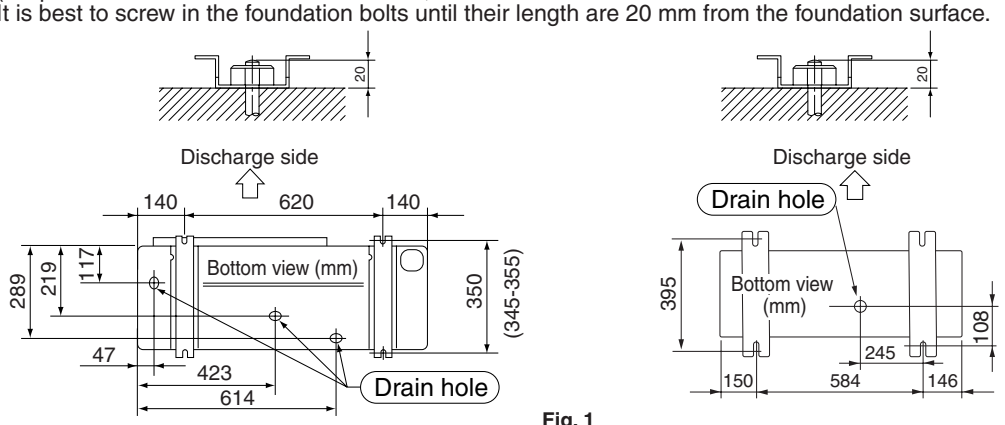


For R26·30·36·42·48·51 model

**Fig. 1**

For R56 model only

**<Drain pipe disposal>**

- If drain pipe disposal from the outdoor unit causes trouble, (for example, if the drain water may splash on people) provide the drain piping by using of the drain plug (optional).
- Make sure the drain works properly.

Continued overleaf

1PN07127C

In case of R56 model,
<<Air Flow Direction Adjustment by Discharge Grille>>
- Before removing the discharge grille, stop the unit and check if the fan is not running. ⚠ **WARNING**
- The air flow direction can be changed as shown below by changing the setting of the discharge grille on the front of the outdoor unit.

1. Remove the screws in the four corners of discharge grille and take it out.
2. Change the grille setting to set the air flow direction. Then, tighten the screws.
   - In a series installation, do not install the equipment so that the air discharges to the side.

(Examples of installation with air direction adjustment)

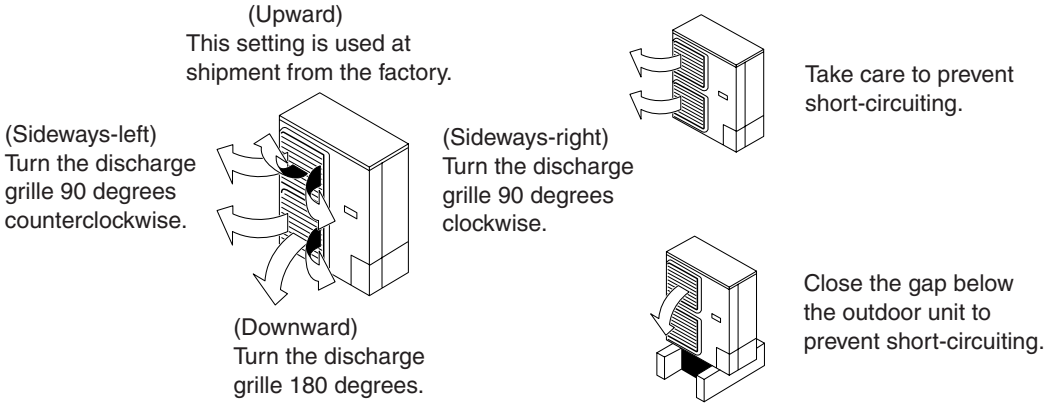


## 5 REFRIGERANT PIPING SIZE AND PERMISSIBLE LENGTH

(Using a chlorine flux may cause the pipes to corrode, and if it contains fluoride it may cause the refrigerant lubricant to deteriorate, adversely affecting the refrigerant piping system.)
- Use the phosphorus deoxidized seamless copper tube.
  1. Confirm the proper refrigerant piping size as follows.

(a) Refrigerant piping size

| Refrigerant piping size | | |
|---|---|---|
| Model | Gas pipe (mm) | Liquid pipe (mm) |
| R36~56 | ⌀19.1 × t1.0 | ⌀9.5 × t0.8 |
| R26,30 | ⌀15.9 × t1.0 | ⌀9.5 × t0.8 |

(b) Permissible piping length and height difference

| Model | Permissible piping length (Parenthesized figure represents equivalent length) | Max. height difference |
|---|---|---|
| R26~R51 | 30 m (50 m) | 20 m |
| R56 | 50 m (70 m) | 30 m |

The associated length is the value of the pressure loss for L joints and traps along the refrigerant piping converted for piping of the same size, and then added.

Note
Set the lower limit for the allowable piping length to 5m. If it is shorter than 5m, the piping will become overloaded with refrigerant, raising the possibility of malfunctions related to high-pressure.

### ⚠ CAUTION

- **Do not use a flux when brazing the refrigerant piping.**
  **For brazing, use phosphor copper brazing filler metal (BC uP) which does not require a flux.**
  **(If a chlorine flux is used, the piping will corrode, and if the flux contains fluoride, it will cause the coolant oil to deteriorate, adversely affecting the coolant piping system.**

### Precautions when using existing refrigerant piping

- **Pay attention to the following points when using existing refrigerant piping.**
  **Improper use can cause accidents.**
- In the following situations, the existing piping should not be re-used and new piping should be installed.
  - If the previously used model had problems with its compressor (this might cause oxidized coolant oil, scale residue, and other adverse effects.)
  - If the indoor or outdoor units were disconnected from the piping for a long period of time (water or dirt might have gotten into the piping.)
  - If copper piping is corroded.
- Flares should not be re-used but rather new ones made in order to prevent leaks.
- Check welded connections for gas leaks, if the local piping has welded connections.
- Replace deteriorating insulation with new material.

1PN07128C

## 6 REFRIGERANT PIPING

*See the installation manual that came with the indoor unit for details on the indoor unit's refrigerant piping.

- Field pipes can be installed in 4 directions.

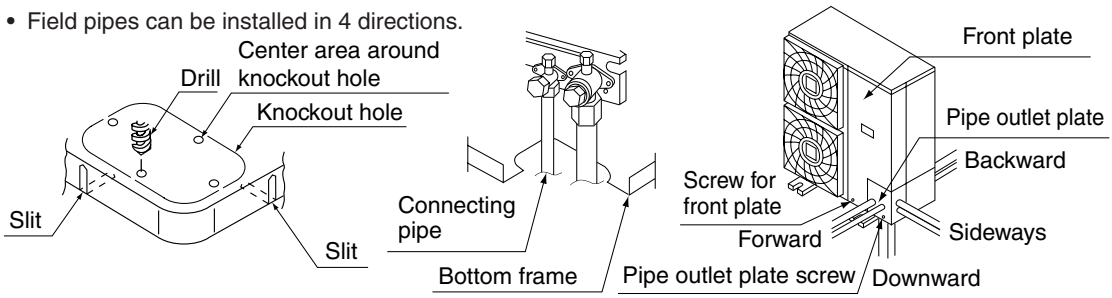


* Cutting out the two slits makes it possible to install as shown in the figure above. (Use a metal saw to cut out the slits.)

- Do not allow any substances other than the specified refrigerant such as air to mix into the refrigerant circuit. ⚠ **CAUTION**
- To install the connecting pipe to the unit in a downward direction, make a knockout hole by penetrating the center area around the knockout hole using a ∅6 mm drill.
- After knocking out the knock hole, we recommend applying a repair coating on edges, slits, and around side surfaces to prevent rusting.

**〈Preventing foreign objects from entering 〉**

- Plug the pipe through-holes with putty or insulating material (procured locally) to stop up all gaps, as shown in Fig. 2.
  Insects or small animals entering the outdoor unit may cause a short in the electrical box.

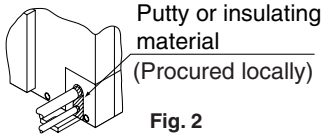


**Fig. 2**

**〈Cautions for handling Stop Valve for R26~R51 〉**

1. The stop valves for indoor-outdoor connecting piping are closed at shipment from the factory.
   The names of parts are shown in Fig. 3.
2. Since the side boards may be deformed if only a torque wrench is used when loosening or tightening flare nuts, always lock the stop valve with a wrench and then use a torque wrench.
   Do not place wrenches on the valve cover.
3. For cooling operation under low ambient temperature or any other operation under low pressure, apply silicon sealing pad, etc. to prevent the freezing of flare nut of gas pipe portion of the stop valve. (Refer to Fig. 4)

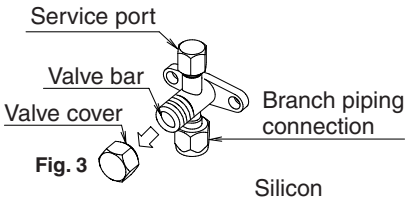


**Fig. 3**

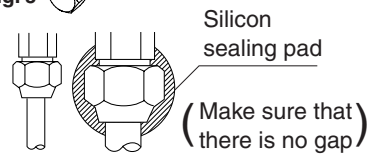


**Fig. 4**

**〈How to use the stop valve - Fig. 5 〉**

Have a hex wrench ready (4 mm and 6 mm)

1. Opening the valve
   a. Place the hex wrench on the valve bar and turn counter-clockwise.
   b. Stop when the valve bar no longer turns. It is now open.
2. Close the valve
   a. Place the hex wrench on the valve bar and turn clockwise.
   b. Stop when the valve bar no longer turns. It is now closed.

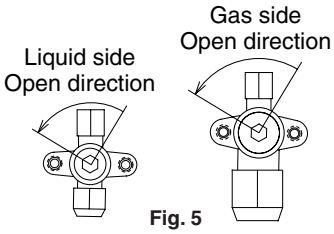


**Fig. 5**

1PN07128C

## CAUTIONS FOR HANDLING VALVE COVER

1. The valve cover is sealed where indicated by the arrow. (Refer to Fig. 6)
   Take care not to damage it.
2. After operating the valve, be sure to tighten the valve cover properly.
   Tightening torque : 19.6-24.5 N • m

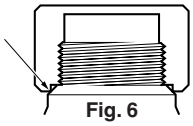

Fig. 6

## CAUTIONS FOR HANDLING SERVICE PORT

1. Work with the charge hose with a pushbar.
2. After the work, tighten the valve cover in place.
   Tightening torque : 10.8-14.7 N • m

## PRECAUTIONS REGARDING INSULATION

- Be careful not to let the indoor and outdoor branch piping come into contact with the compressor terminal cover.
  If the liquid-side piping insulation might come into contact with it, adjust the height as shown in the figure at right. Also, make sure the branch piping does not touch the bolts of the compressor or outer panels.
- If there is a possibility that condensation on the stop valve might drip down into the indoor unit through gaps in the insulation and piping because the outdoor unit is located higher than the indoor unit, etc., this must be prevented by corking the connections, etc.

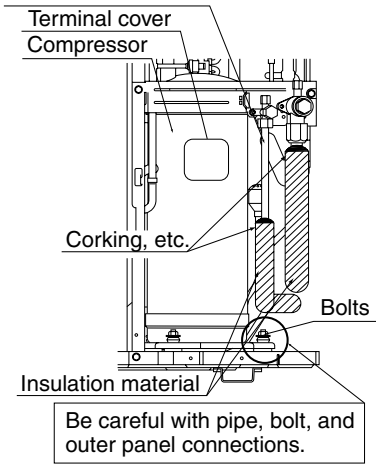


- Furthermore, if the temperature/humidity in the ceiling are expected to exceed 30˚C / 80% RH, the insulation material of the refrigerant pipes should be strengthened (to be a thickness of 20 mm or more). There may be some condensation on the surfece of the insulation material.
- Be sure to insulate the liquid and gas-side branch piping and the refrigerant branch kit. (Not insulating them may cause leaking.)

### 〈Cautions for handling Stop Valve for R56〉

1. The stop valves for indoor-outdoor connecting piping are closed at shipment from the factory. The names of parts are as shown on the right.
2. Use two wrenches at the points indicated by the solid arrows (⬅) when loosening or tightening the flare nuts.
3. Do not apply the wrenches to the positions indicated by the hollow arrows. (⇦)

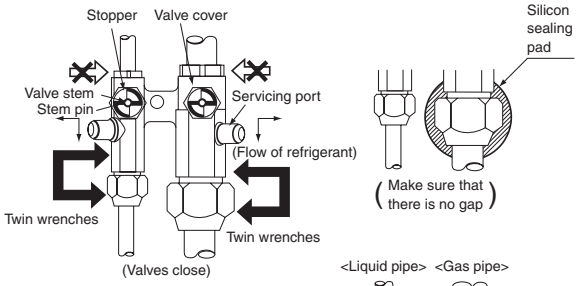


☆ For cooling operation under low ambient temperature or any other operation under low pressure, apply silicon sealing pad, etc. to prevent the freezing of flare nut gas pipe portion of the stop valve.

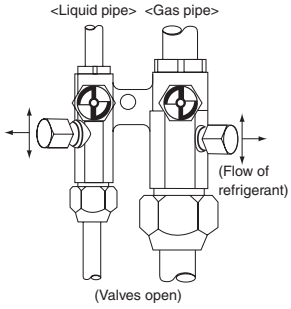


### 〈Operating of Stop Valve〉

1. Opening
   (a) Turn the valve stem 1/4 turn counterclockwise, using a ⊖ driver.
   (b) Stop when the pin hits the stopper. The valve is open.
2. Closing
   (a) Turn the valve stem 1/4 turn clockwise, using a ⊖ driver.
   (b) Stop when the pin hits the stopper. The valve is closed.

☆ After install pipe finished, please use sealing ( field supply ) to cover knockout hole to prevent dew drop.

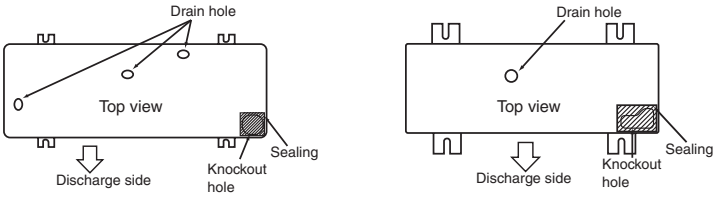


For R26~R51NU For R56NU

**⚠ CAUTION** Be sure to insulate any field piping all the way to the piping connection inside the unit. Any exposed piping may cause condensation or burns if touched.

1PN07128C

## CAUTIONS FOR FLARE CONNECTION

1. See the following table for the flare dimensions.
2. When connecting the flare nut, **apply refrigerating machine oil to the flare (inside and outside) and first screw the nut 3 or 4 turns by hand.**
3. See the following table for the tightening torque.
   **Excessive tightening could crack the flare. ⚠ CAUTION**
4. After completing the installation, carry out a gas leak inspection of the piping connections with nitrogen and such.

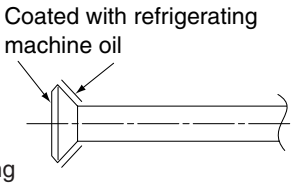


| Pipe size (mm) | Tightening torque | Flare dimensions A (mm) | Flare form |
|---|---|---|---|
| ∅ 9.5 | 32.7~39.9 N • m | 12.6 – 13.0 | 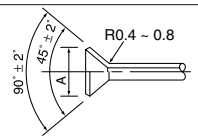 |
| ∅15.9 | 61.80~75.4 N • m | 19.0 – 19.4 | |
| ∅19.1 | 97.2~118.8 N • m | 23.3 – 23.7 | |



- If a torque wrench is not available, use Table as a guide.
  When work is completed, **be sure to check that there is no gas leakage**.
  When a wrench is used to tighten the flare nuts, the tightening torque may increase suddenly.
  From this position tighten only to the angle shown in table.

| Pipe size (mm) | Further tightening angle | Recommended arm length of tool |
|---|---|---|
| ∅ 9.5 | 60 to 90 degrees | Approx. 200mm |
| ∅15.9 | 30 to 60 degrees | Approx. 300mm |
| ∅19.1 | 20 to 35 degrees | Approx. 450mm |

## CAUTIONS FOR NECESSITY OF A TRAP

Since there is fear of the oil held inside the riser piping flowing back into the compressor when stopped and causing liquid compression phenomenon, or cases of deterioration of oil return, it will be necessary to provide a trap at an appropriate place in the riser gas piping.

■ Trap installation spacing

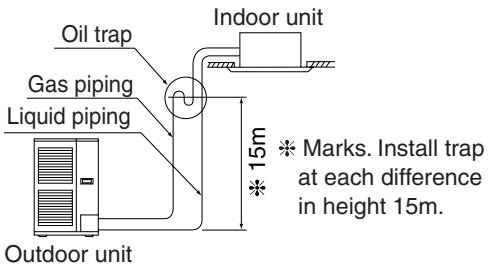


Note) A trap is not necessary when the outdoor unit is installed in a higher position than the indoor unit.

## CAUTIONS FOR SIMULTANEOUS OPERATIONS MULTI-TYPE

- Start-up and shut-down of pipes should be done using the main piping.
- Use the refrigerant branch pipe kit (sold separately) for refrigerant piping branches. (See the kit instruction manual for details.)
- **Be sure to carry out a nitrogen blow when brazing.**

(Brazing without carrying out nitrogen replacement or releasing nitrogen into the piping will create large quantities of oxidized film on the inside of the pipes, adversely affecting valves and compressors in the refrigerating system and preventing normal operation.)

**NOTES**

1. Refer to the “Manual for Installation” for directions on how to carry out nitrogen replacement. (Inquire with your dealer.)
2. Nitrogen should be set to 0.02 Mpa (enough so that it can be felt on the skin) with a pressure-reducing valve if brazing while inserting nitrogen into the piping.

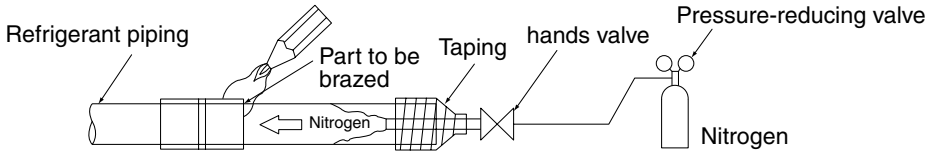


1PN07128C

## 7 AIR PURGE

- Carry out an air purge of the refrigerant system, using a vacuum pump.

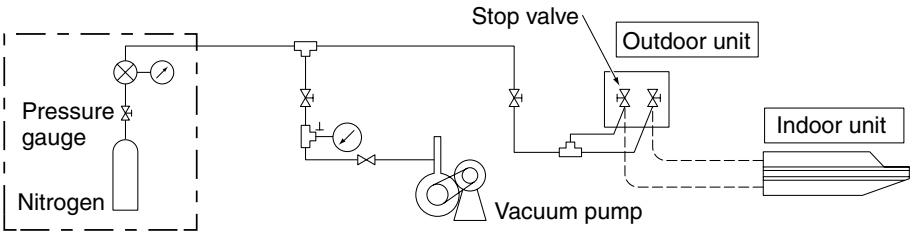


## 8 CHARGING OF REFRIGERANT

- This unit requires additional charging of refrigerant according to the length of pipe connected at the site. When the entire refrigerant pipe length is within 15 meters (for R56, 5 meters), the additional charging is not needed.

Take the following steps for proper charging.

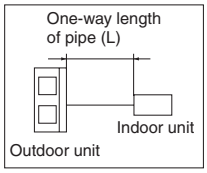


**1. Refrigerant charge amount**

Additional charging of refrigerant
Select the appropriate refrigerant charging amount from Table 1 and charge the refrigerant.
Write down the amount of extra refrigerant added in accordance with the precaution plate on the rear surface of the front plate, as this is necessary for after-sales service.

Table 1 Additional charging refrigerant amount

| Additional charging refrigerant amount | | | Piping length (L) | | | |
|---|---|---|---|---|---|---|
| kg | = | ( | m | — A | ) | × B |

A = 5 m, for R56 model
A = 10 m, for R26~R30 model
A = 15 m, for R36~R51 model

B = 0.020 kg/m, for R26~R30 model
B = 0.025 kg/m, for R36~R56 model

< PRECAUTION >

- Contact your Daikin dealer when installing the unit using pipes of 3 m or less.

### ⚠ CAUTION

**To persons in charge of piping work:**

- Be sure to open the stop valve after piping work is complete.
  (Running the system with the valve closed may break the compressor.)

## 9 ELECTRICAL WIRING

**⚠ Install the earth leakage circuit breaker.**

- Electrical wiring must be carried out by qualified personnel. ⚠ **WARNING**
- Before obtaining access to terminal devices, all supply circuits must be interrupted. ⚠ **WARNING**
- Be sure to ground the air conditioner. ⚠ **CAUTION**
- Do not connect the earth wire to a gas pipe, water pipe, lightning conductor or telephone earth wire. ⚠ **CAUTION**
- Use only copper wires. ⚠ **CAUTION**
- The wiring between the indoor unit and outdoor unit must be for 220~240V.
- Do not turn on the main switch until all the wiring is completed.
- The resistance of the grounding must not exceed 100Ω.
- When performing electrical wiring, refer also to the wiring diagram affixed to the unit.
- Use the specified wires and fix them with clamps so that no external forces act on the terminals. For clamping, push the hook in tail end of the clamp to loosen it, pass the wires through it, then fasten the clamp.
- Clamp the wiring as shown below, taking care that the wires do not touch the piping. (especially high-pressure piping)

- **For 3 phase models**
  Make sure to connect power supply cables in normal phase. If connected in reverse phase, the equipment cannot operate. Change any two of the three power supply cables ($L_1$, $L_2$, $L_3$) to correct phase.
  (If the contact in the magnetic switch should be forcibly turned on while the equipment is inoperative, the compressor will be damaged by a fire. Never try to forcibly turn on the contact.)
- Never squeeze extra wires into the unit.
- Protect the electric wiring with electric wiring pipes or tubes to prevent the edges of the knock holes from damaging it.
- Secure the electrical wiring with the included clamping material as shown in the figure below so that it does not come in contact with the piping, particularly on the high-pressure side.
  Make sure no external pressure is applied to the terminal connectors.
  Secure the wiring in the order shown below.
  1. Secure the wiring between units to the stop valve mounting plate so that it does not slide.
  2. Secure the wiring between units to the stop valve mounting plate one more time along with the power supply wiring.
- Lay the electrical wiring so that the front cover does not rise up when doing wiring work, and attach the front cover securely.
- Form the wires and fix the cover firmly so that the cover may be fit in properly.

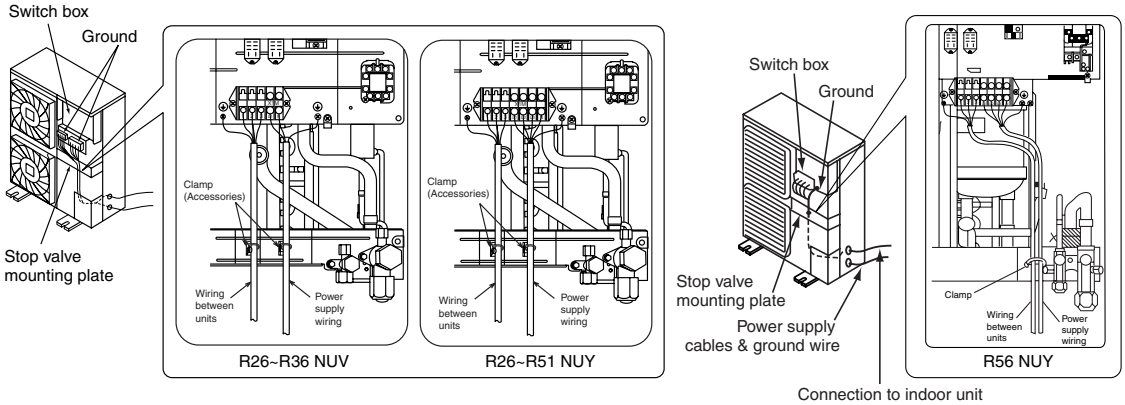


Observe the notes mentioned below when wiring to the power supply terminal board.
(Use a round crimp-style terminal for connection to the power supply terminal board. In case it cannot be used due to unavoidable reasons, be sure to observe the following instruction.)

- Do not connect wires of different gauge to the same power supply terminal.
  (Looseness in the connection may cause overheating.)
- When connecting wires of the same gauge, connect them according to the righthand figure.
- In wiring, make certain that prescribed wires are used, carry out complete connections, and fix the wires so that outside forces are not applied to the terminals.

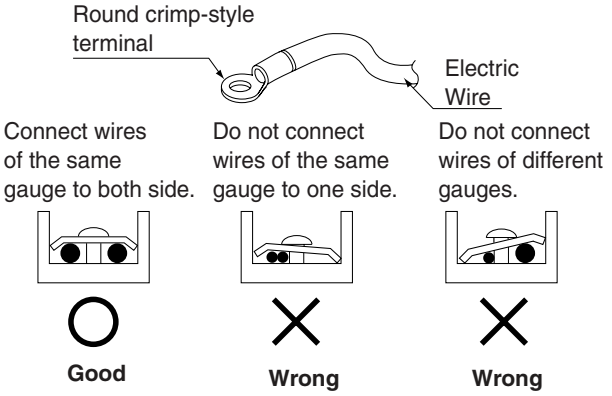


1PN07128C

- Use the correct screwdriver to tighten the terminal screws. Small screwdrivers can damage the screw head and prevent appropriate tightening.
- Over-tightening the terminal screws can damage the screws.
- See the chart at right for tightening torques for the terminal screws.

| Tightening torques (N • m) | |
|---|---|
| M4 | 1.18 – 1.44 |
| M5 | 2.39 – 2.91 |

<How to Connect the Power Supply and Wire between Units>

1. For details on the wiring of the indoor unit and wiring between units, refer to the Installation Manual of the indoor unit.

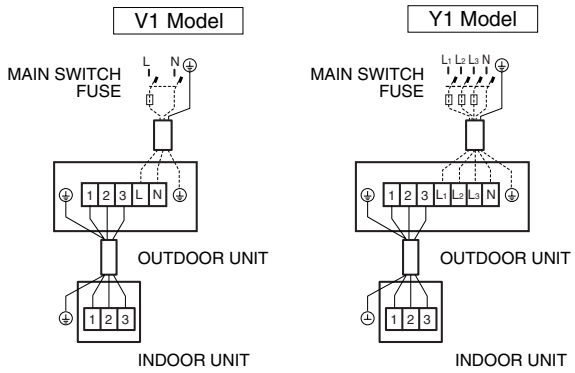


| | |
|---|---|
| Single phase type | V1 |
| | 220 - 240V ~ 50Hz |
| Three-phase Four-wire system type | Y1 |
| | 380 - 415V 3N ~ 50Hz |

Specifications of standard wiring components

| Model | Power supply | | | Wire type of wiring between the units. |
|---|---|---|---|---|
| | Field fuse | Wire type | Size | |
| R26NUV1 | 35A | H05VV-U3G | Wiring size must comply with the applicable local and national code. | H05VV-U4G2.5 |
| R26NUY1 | 15A | H05VV-U3G | | H05VV-U4G2.5 |
| R30NUV1 | 35A | H05VV-U3G | | H05VV-U4G2.5 |
| R30NUY1 | 15A | H05VV-U3G | | H05VV-U4G2.5 |
| R36NUV1 | 40A | H05VV-U3G | | H05VV-U4G2.5 |
| R36NUY1 | 15A | H05VV-U5G | | H05VV-U4G2.5 |
| R42NUY1 | 20A | H05VV-U5G | | H05VV-U4G2.5 |
| R48NUY1 | 20A | H05VV-U5G | | H05VV-U4G2.5 |
| R51NUY1 | 20A | H05VV-U5G | | H05VV-U4G2.5 |
| R56NUY1 | 25A | H05VV-U5G | | H05VV-U4G2.5 |

- Instead of fuse, use circuit breaker.
- Refer to the engineering data for details.

**CAUTION : (Y1 Models Only)**

- Make sure that the phase reversal protector's terminal connection is converted when switching to a 400 volt or 415 volt connection.

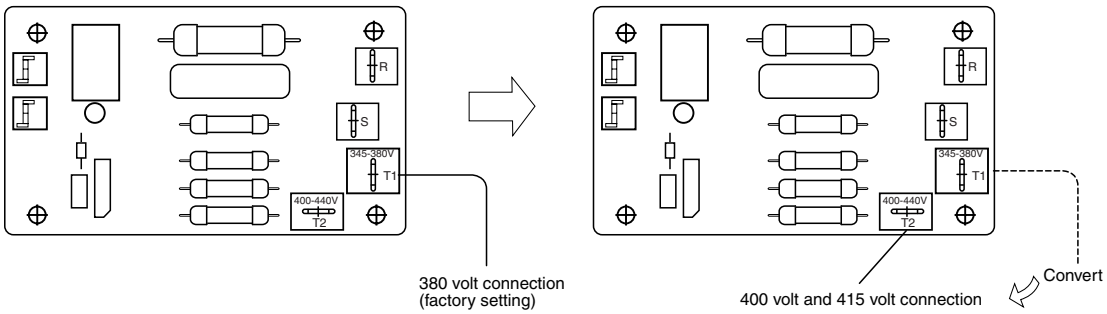


- Failing to convert to the proper voltage will cause serious damage to the unit.

**⚠CAUTION**

**To persons in charge of electrical wiring work:**

- Do not operate the unit until the refrigerant piping is complete. (Running it before the piping is ready will break the compressor.)

1PN07128C

## 10 TEST RUN PROCEDURE

- Be sure to fully open the liquid-side and gas-side stop valves.
- For details on test operation, refer to the Installation Manual of the indoor unit.

### Pre-run checks

| | Item to check |
|---|---|
| • Power supply wiring<br>• Wiring between units<br>• Ground wire | • Is the wiring as per the wiring diagram?<br>Make sure no wiring has been forgotten and that there are no missing phases or reverse phases.<br>• Is the unit properly grounded?<br>• Are any of the wiring attachment screws loose?<br>• Is the insulation resistance at least 1MΩ?<br>• Use a 500V mega-tester when measuring insulation.<br>• *Do not use a mega-tester for circuits which are not 220-240V. |
| • Refrigerant piping | • Is the size of the piping appropriate?<br>• Is the insulation material for the piping attached securely?<br>Are both the liquid and gas pipes insulated?<br>• Are the stop valves for both the liquid side and the gas side open? |
| • Extra refrigerant | • Did you write down the extra refrigerant and the refrigerant piping length? |

### Test run

1. Make sure the liquid and gas stop valves are open.
   <Be sure to close the outside cover before operation, as not doing so can cause electric shock.>
   *The refrigerant pressure may not rise even if the stop valve is opened after an air purge is performed using a vacuum pump.
   This is because the outdoor unit refrigerant piping is closed off with electric valves inside. This will not create any problems during operation.
2. Press the **inspection/test-run** switch on the remote control to put the machine into test-run mode.
3. Make sure the compressor is not starting and stopping during the test-run by listening. If it is starting and stopping, immediately stop the machine using the remote control, and check the refrigerant level, etc. There may be some sort of malfunction.

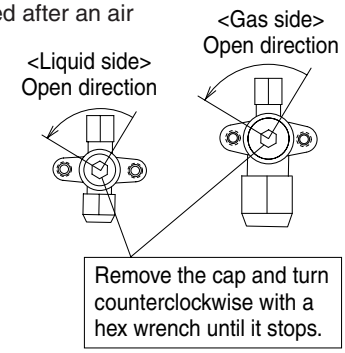


- There is a safety device against malfunctions in the compressor. If a malfunction occurs (including closed stop valves or no gas), the internal safety device may be activated due to the temperature in the compressor rising. Once this happens, the unit will not be able to be run until the temperature in the compressor drops (between 30 minutes and 2 hours), but this does not mean the machine is broken. Make sure the unit not being run without gas due to a closed stop valve or a gas leak.

## 11 DIMENSION

| Model Name | Unit Dimension H × W × D (mm) | Weight (kg) |
|---|---|---|
| R26NUV1 | 770 × 900 × 320 | 70 |
| R26NUY1 | 770 × 900 × 320 | 60 |
| R30NUV1 | 770 × 900 × 320 | 70 |
| R30NUY1 | 770 × 900 × 320 | 69 |
| R36NUV1 | 1170 × 900 × 320 | 81 |

| Model Name | Unit Dimension H × W × D (mm) | Weight (kg) |
|---|---|---|
| R36NUY1 | 1170 × 900 × 320 | 79 |
| R42NUY1 | 1170 × 900 × 320 | 87 |
| R48NUY1 | 1345 × 900 × 320 | 92 |
| R51NUY1 | 1345 × 900 × 320 | 93 |
| R56NUY1 | 1345 × 880 × 370 | 114 |

1PN07128C

# Part 3

# Detail information of options




1. Accessories ..... 146
   1.1 Indoor unit ..... 146
   1.2 Outdoor unit ..... 147
2. Remote controller ..... 148
   2.1 BRC1C61 (for FHC-NU) — Wired remote controller ..... 148
   2.2 BRC1NU61 (for FH-NU) — Wired remote controller ..... 152
   2.3 KRC47-1A (for FDBG-NU and FDMG-NU) — Wired remote controller ..... 155
   2.4 KRC47-2A / KRC47-4A (for FDBG-NU and FDMG-NU) — Wired remote controller ..... 156
   2.5 BRC7C613W (for FHC-NU) — Wireless remote controller ..... 160
   2.6 BRC7NU66 (for FH-NU) — Wireless remote controller ..... 166
3. FHC-NU ..... 170
   3.1 BYC125K-W1 / BYC125K-W2 — Decoration panel ..... 170
   3.2 KDBHJ55K160 — Sealing member of air discharge outlet ..... 173
   3.3 KDBP55H160WA — Panel spacer ..... 175
   3.4 KDDP55D160 / KDDP55D160K — Fresh air intake kit (chamber type) ..... 178
   3.5 KDDJ55X160 — Fresh air intake kit (direct installation type) ..... 182
   3.6 KAFP556D80 / KAFP556D160, KAFP557D80 / KAFP557D160 — High efficiency filter (including chamber) ..... 185
   3.7 KAFP552H80 / KAFP552H160, KAFP553H80 / KAFP553H160 — Replacement high efficiency filter ..... 188
   3.8 KDDFP55D160 — High efficiency filter chamber ..... 189
   3.9 KAFJ551K160 — Replacement long life filter ..... 192
   3.10 KAFP55D160 — Ultra long life filter unit (including chamber) ..... 193
   3.11 KAFJ55K160H — Replacement ultra long life filter ..... 196
   3.12 KKSJ55K160 — Chamber connection kit ..... 197
   3.13 KDJ55K80 / KDJ55K160 — Branch duct chamber ..... 198
   3.14 KRP1B98 — Installation box for adaptor PCB ..... 201
4. FH-NU ..... 202
   4.1 KAFJ501D80 / KAFJ501D112 / KAFJ501D160 — Replacement long-life filter ..... 202
   4.2 KHFJ5F80 / KHFJ5F160 — L type piping kit (for upward direction) ..... 203
5. FDBG-NU ..... 204
   5.1 KKD19A1—Drain pan cover ..... 204
6. RU-NU ..... 205
   6.1 KIS95 — Drain piping kit ..... 205
   6.2 KKPJ5F180 — Central drain plug ..... 206

# 1. Accessories

## 1.1 Indoor unit

### 1.1.1 FHC-NU

**Optional accessories**

| Name of option | Remark | | Kit name | | | | | | |
|---|---|---|---|---|---|---|---|---|---|
| | | | FHC18NUV1 | FHC21NUV1 | FHC26NUV1 | FHC30NUV1 | FHC36NUV1 | FHC42NUV1 | FHC48NUV1 |
| Decoration panel | | | BYC125K–W1, BYC125K-W2 | | | | | | |
| Sealing member of air discharge outlet | | | KDBHJ55K160 | | | | | | |
| Panel spacer | | | KDBP55H160WA | | | | | | |
| Fresh air intake kit | Chamber type | Without T-joint pipe and fan | KDDP55D160 | | | | | | |
| | | With T-joint pipe, without fan | KDDP55D160K | | | | | | |
| | Direct installation type | | KDDJ55X160 | | | | | | |
| Chamber connection kit *3 | | | KKSJ55K160 | | | | | | |
| High-efficiency filter | (Colourimetric method 65%) | | KAFP556D80 | | | KAFP556D160 | | | |
| | (Colourimetric method 90%) | | KAFP557D80 | | | KAFP557D160 | | | |
| Replacement high-efficiency Filter | (Colourimetric method 65%) | | KAFP552H80 | | | KAFP552H160 | | | |
| | (Colourimetric method 90%) | | KAFP553H80 | | | KAFP553H160 | | | |
| High-efficiency filter chamber | | | KDDFP55D160 | | | | | | |
| Replacement long-life filter | Resin net (Gravimetric method 50%) | | KAFJ551K160 | | | | | | |
| Ultra long-life filter | | | KAFP55D160 | | | | | | |
| Replacement ultra long-life filter | | | KAFJ55K160H | | | | | | |
| Branch duct chamber | | | KDJ55K80 | | | KDJ55K160 | | | |
| Remote controller | Wired type | | BRC1C61 | | | | | | |
| | Wireless type | | BRC7C613W | | | | | | |
| Wired LCD remote controller with weekly schedule timer | | | BRC1D61 | | | | | | |
| Central remote controller *1 | | | DCS302CA61 | | | | | | |
| Unified ON/OFF controller *1 | | | DCS301BA61 | | | | | | |
| Schedule timer *1 | | | DST301BA61 | | | | | | |
| intelligent touch controller | | | DCS601C51 | | | | | | |
| Adaptor for wiring *2 | | | KRP1BA57 | | | | | | |
| Wiring adaptor for electrical appendices *2 | | | KRP4AA53 | | | | | | |
| Interface adaptor for SkyAir series | | | DTA102A52 | | | | | | |
| Installation box for adaptor PCB | | | KRP1B98 | | | | | | |

C : 3D054362B
C : 3D052565A

**Note:** *1. This optional accessary requires DTA102A52.
*2. Installation box for adaptor PCB (KRP1B98) is necessary.
*3. Required for installing high-efficiency filter or ultra long-life filter.

### 1.1.2 FH-NU

**Optional accessories**

| Name of option | Remark | Kit name | | | | |
|---|---|---|---|---|---|---|
| | | FH21NUV1 | FH26NUV1 | FH30NUV1 | FH36NUV1 | FH48NUV1 |
| Replacement long-life filter | | KAFJ501D80 | | KAFJ501D112 | KAFJ501D160 | |
| L-type piping kit (for upward direction) | | KHFJ5F80 | | KHFJ5F160 | | |
| Remote controller | Wired type | BRC1NU61 | | | | |
| | Wireless type | BRC7NU66 | | | | |

3D054225B
3D052467

### 1.1.3 FDBG-NU

**Optional accessories**

| Name of option | Remark | Kit name | | |
|---|---|---|---|---|
| | | FDBG18NUV1 | FDBG21NUV1 | FDBG26NUV1 |
| Remote controller with 3 minutes timer | | KRC47-1A | | |
| Digital remote controller with 3 minutes timer | | KRC47-2A | | |
| Digital remote controller with 3 minutes timer | With switch for duct heater | KRC47-4A | | |
| Suction grille | | KDGF19A45 | KDGF19A71 | |
| Drain pan cover | | KKD19A1 | | |

C : 4D048550A

**Note:** *1. If you use local remote controller, 3 minutes timer is necessary for the recycling guard of compressor.
*2. Central controls using with VRV controller are available on request. Please consult DAIKIN.

### 1.1.4 FDMG-NU

**Optional accessories**

| Name of option | Remark | Kit Name | | | | | | |
|---|---|---|---|---|---|---|---|---|
| | | FDMG26NUV1 | FDMG30NUV1 | FDMG36NUV1 | FDMG42NUV1 | FDMG48NUV1 | FDMG51NUV1 | FDMG56NUV1 |
| Remote controller with 3 minutes timer | | KRC47-1A | | | | | | |
| Digital remote controller with 3 minutes timer | | KRC47-2A | | | | | | |
| Digital remote controller with 3 minutes timer | With switch for duct heater | KRC47-4A | | | | | | |

4D054400B
4D052569A

**Note:** *1. If you use local remote controller, 3 minutes timer is necessary for the recycling guard of compressor.
*2. Central controls using with VRV controller are available on request. Please consult DAIKIN.

## 1.2 Outdoor unit

### 1.2.1 R-NU

**Optional accessories**

| Name of option | Kit Name | | | | | | | | |
|---|---|---|---|---|---|---|---|---|---|
| | R18NUV1 | R21NUV1 | R26NUV1 | R30NUV1 R30NUY1 | R36NUV1 R36NUY1 | R42NUY1 | R48NUY1 | R51NUY1 | R56NUY1 |
| Drain piping kit | — | KIS95 | — | | | | | | |
| Central drain plug | — | — | KKPJ5F180 | | | | | | |

4D052475E

# 2. Remote controller

## 2.1 BRC1C61 (for FHC-NU) — Wired remote controller

### 2.1.1 Name and function of each switch and display on the remote contoller

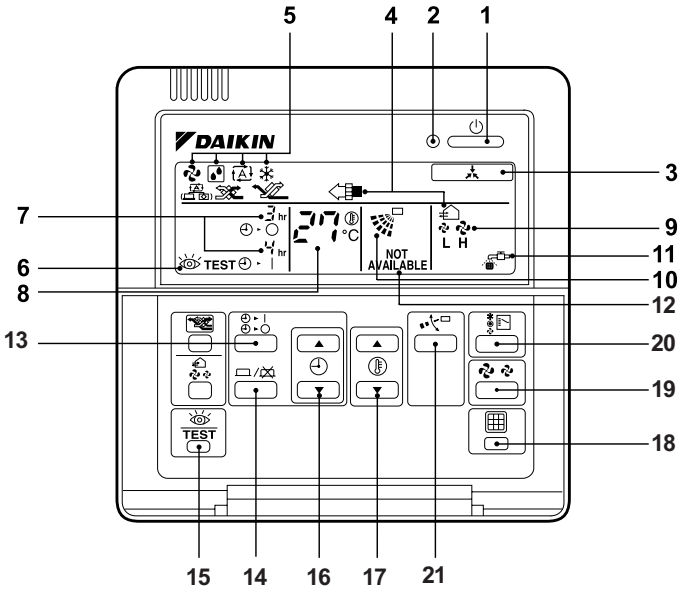


| | |
|---|---|
| 1 | **ON/OFF BUTTON** |
| | Press the button and the system will start. Press the button again and the system will stop. |
| 2 | **OPERATION LAMP (RED)** |
| | The lamp lights up during operation. |
| 3 | **DISPLAY " " (UNDER CENTRALIZED CONTROL)** |
| | When this display shows, the system is UNDER CENTRALIZED CONTROL. |
| 4 | **DISPLAY " " " " " " (VENTILATION/AIR CLEANING)** |
| | This display shows that the total heat exchange and the air cleaning unit are in operation (These are optional accessories). |
| 5 | **DISPLAY " " " " " " " (OPERATION MODE)** |
| | This display shows the current OPERATION MODE. |
| 6 | **DISPLAY " TEST " (INSPECTION/TEST OPERATION)** |
| | When the INSPECTION/TEST OPERATION BUTTON is pressed, the display shows the system mode is in. |
| 7 | **DISPLAY " " (PROGRAMMED TIME)** |
| | This display shows the PROGRAMMED TIME of the system start or stop. |
| 8 | **DISPLAY " " (SET TEMPERATURE)** |
| | This display shows the set temperature. |
| 9 | **DISPLAY " " (FAN SPEED)** |
| | This display shows the set fan speed. |
| 10 | **DISPLAY " " (AIR FLOW FLAP)** |
| | Refer to "ADJUSTING THE AIR FLOW DIRECTION". |
| 11 | **DISPLAY " " (TIME TO CLEAN AIR FILTER)** |
| | Refer to "HOW TO CLEAN THE AIR FILTER". |

| | |
|---|---|
| 12 | **NON-FUNCTIONING DISPLAY** |
| | If that particular function is not available, pressing the button may display the words "NOT AVAILABLE" for a few seconds. When running multiple units simultaneously The "NOT AVAILABLE" message will only be appear if none of the indoor units is equipped with the function. If even one unit is equipped with the function, the display will not appear. |
| 13 | **TIMER MODE START/STOP BUTTON** |
| | Refer to "PROGRAM TIMER OPERATION". |
| 14 | **TIMER ON/OFF BUTTON** |
| | Refer to "PROGRAM TIMER OPERATION". |
| 15 | **INSPECTION/TEST OPERATION BUTTON** |
| | This button is used only by qualified service persons for maintenance purposes. |
| 16 | **PROGRAMMING TIME BUTTON** |
| | Use this button for programming "START and/or STOP" time. |
| 17 | **TEMPERATURE SETTING BUTTON** |
| | Use this button for SETTING TEMPERATURE. |
| 18 | **FILTER SIGN RESET BUTTON** |
| | Refer to "HOW TO CLEAN THE AIR FILTER". |
| 19 | **FAN SPEED CONTROL BUTTON** |
| | Press this button to select the fan speed, HIGH or LOW, of your choice. |
| 20 | **OPERATION MODE SELECTOR BUTTON** |
| | Press this button to select OPERATION MODE. |
| 21 | **AIR FLOW DIRECTION ADJUST BUTTON** |
| | Refer to "ADJUSTING THE AIR FLOW DIRECTION". |

**NOTE**

- For the sake of explanation, all indications are shown on the display in figure 1 contrary to actual running situations.

3PN07217-2C

### 2.1.2 Installation

**1. Remove the upper part of remote controller.**

Insert minus screwdriver into the slots in the lower part of remote controller (2 places), and remove the upper part of remote controller.

The PC board is mounted in the upper part of remote controller. Be careful not to damage the board with the minus screwdriver.

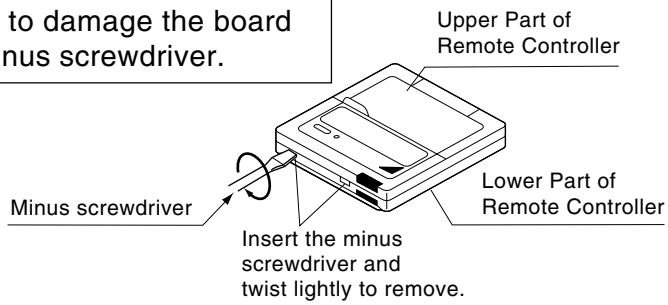


**2. Fasten the remote controller.**

① For exposed mounting, fasten with the included wood screws (2).

② For flush-mounting, fasten with the included machine screws (2).

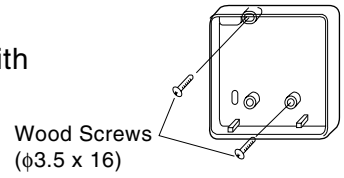


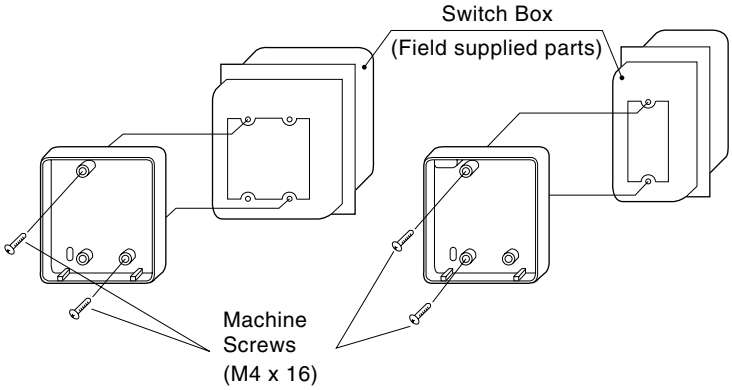


For the field supplied switch box, use optional accessories KJB111A or KJB211A.

**NOTE**

Choose the flattest place possible for the mounting surface. Be careful not to distort the shape of the lower part of remote controller by over-tightening the mounting screws.

2P068938

## 3.Wire the indoor unit.

Connect the terminals on top of the upper part of remote controller (P1, P2), and the terminals of the indoor unit (P1, P2). (P1 and P2 do not have polarity.)

**NOTE**
When wiring, run the wiring away the power supply wiring in order to avoid receiving electric noise (external noise).

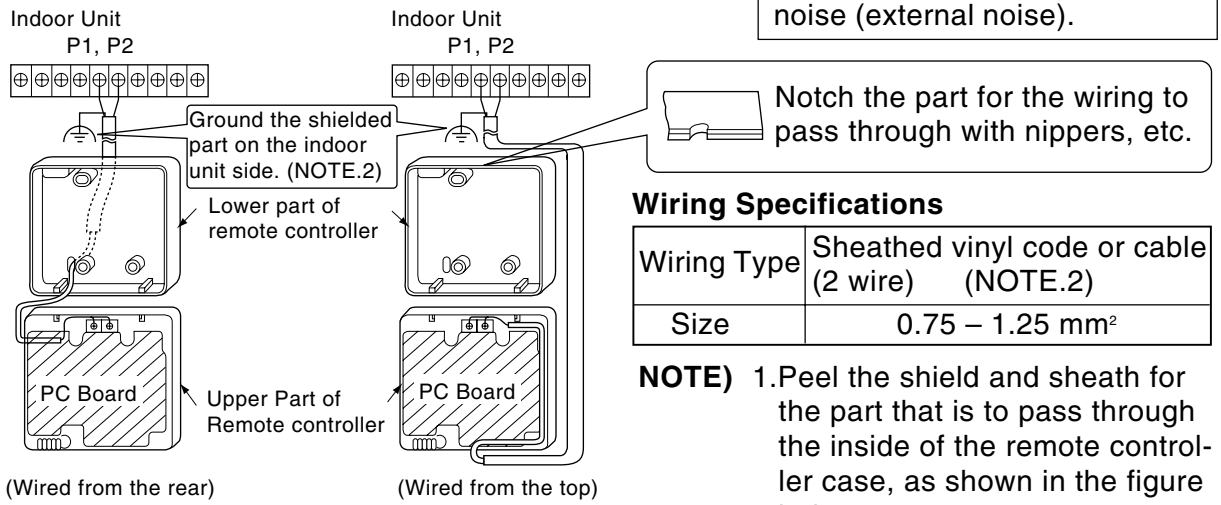


**Wiring Specifications**

| | |
|---|---|
| Wiring Type | Sheathed vinyl code or cable (2 wire) (NOTE.2) |
| Size | 0.75 – 1.25 mm² |

**NOTE)** 1.Peel the shield and sheath for the part that is to pass through the inside of the remote controller case, as shown in the figure below.

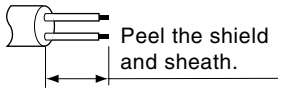


2. Shield wire (2 wire) can be used for remote controller wiring, but it must confirm to EMC (Electromagnetic Compatibility) (European Directive).

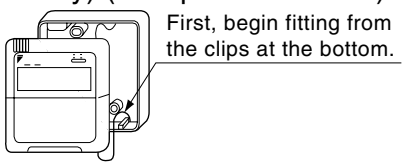


## 4.Reattach the upper part of remote controller.

Be careful not to pinch the wiring when attaching.

**NOTE**

1.The switch box and wiring for connection are not included.
2.Do not directly touch the PC board with your hand.

**If controlling one indoor unit with two remote controllers**

Change the MAIN/SUB changeover switch setting as described below.

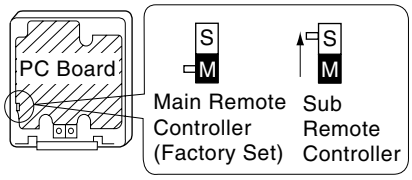


Set one remote controller to“main,” and the other to “sub.”

**NOTE**

- If controlling with one remote controller, be sure to set it to “main.”
- Set the remote controller before turning power supply on.

**“ 88 ” is displayed for about one minute when the power supply is turned on, and the remote controller cannot be operated in some cases.**

2P068938

## 2.1.3 Field setting

(If optional accessories are mounted on the indoor unit, the indoor unit setting may have to be changed. Refer to the instruction manual for each optional accessory.)

**Procedure**

① When in the normal mode, press the " TEST " button for a minimum of four seconds, and the FIELD SET MODE is entered.

② Select the desired MODE NO. with the " " button.

③ During group control, when setting by each indoor unit (mode No. 20, 21 and 23 have been selected), push the " " button and select the INDOOR UNIT NO to be set. (This operation is unnecessary when setting by group.)

④ Push the " " upper button and select FIRST CODE NO.

⑤ Push the " " lower button and select the SECOND CODE NO.

⑥ Push the " " button once and the present settings are SET.

⑦ Push the " TEST " button for about one second to return to the NORMAL MODE.

(Example) If during group setting and the time to clean air filter is set to FILTER CONTAMINATION - HEAVY, SET MODE NO. to "10," FIRST CODE NO. to "0," and SECOND CODE NO to "02."

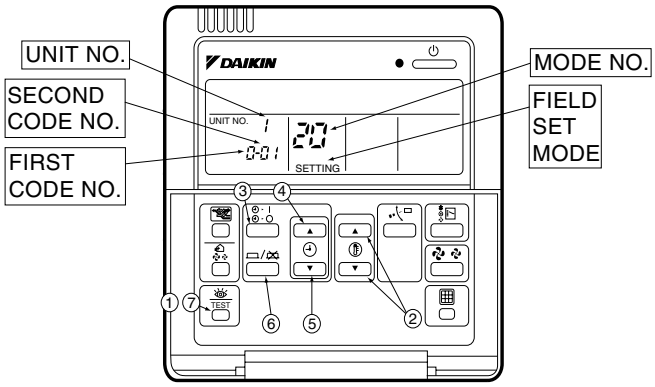


| Mode No. Note) 1 | FIRST CODE NO. | Description of Setting | | SECOND CODE No. Note) 2 | | | | |
|---|---|---|---|---|---|---|---|---|
| | | | | 01 | | 02 | | 03 |
| 10(20) | 0 | Filter Contamination - Heavy/Light (Setting for spacing time of display time to clean air filter) (Setting for when filter contamination is heavy, and spacing time to clean air filter is to be halved) | Ultra-long-life type | Light | Approx. 10,000 hours | Heavy | Approx. 5,000 hours | — |
| | | | Long-life type | | Approx. 2,500 hours | | Approx. 1,250 hours | |
| | | | Standard type | | Approx. 200 hours | | Approx. 100hours | |
| | 1 | Long-life filter type (Setting of filter sign indication time) (Change setting when Ultra-long-life filter is installed) | | Long-life filter | | Ultra-long-life filter (1) | | — |
| | 3 | Spacing Time of Display Time to Clean Air Filter Count (Setting for when the filter sign is not to be displayed) | | Display | | Do Not Display | | — |
| 11(21) | 0 | Setting Number of Connected Skyair Simultaneous Operation System Indoor Units(Setting for Simultaneous Operation System) | | Pair | | Twin | | — |
| 13(23) | 0 | High Celling Setting (Setting for when installed in a Ceiling higher than 2.7m) | | Normal | | High Ceiling 1 | | High Ceiling 2 |
| | 1 | Selection of Air Flow Direction (Setting for when a blocking pad kit has been installed) | | F | | T | | W |
| | 3 | Air Flow Direction Adjust Function (To be set when decoration panel for air outlet is installed) | | Equippeed | | No Equippeed | | — |
| | 4 | Air Flow Direction Range Setting | | Upper | | Normal | | Lower |
| | 6 | Setting the External Static Pressure (Setting according to the connected duct resistance) (For FHYK, follow the High Ceiling Setting) | | Normal (Normal) | | High Static Pressure (High Ceiling) | | Low Static Pressure — |

**Note:**

1. Setting is carried out in the group mode, however, set the mode number inside the ( ) for individual setting of the each indoor unit or confirmation after setting.
2. The SECOND CODE number is set to "01" when shipped from the factory.
   However for the following cases it is set to "02".
   ●IAir flow direction range setting.
3. Do not make any settings not given in the table above.
4. Not displayed if the indoor unit is not equipped with that function.
5. When returning to the normal mode, "88" may be displayed in the LCD in order for the remote controller to initialize itself.

2P068938

## 2.2 BRC1NU61 (for FH-NU) — Wired remote controller

### 2.2.1 Names and functions of the operating section

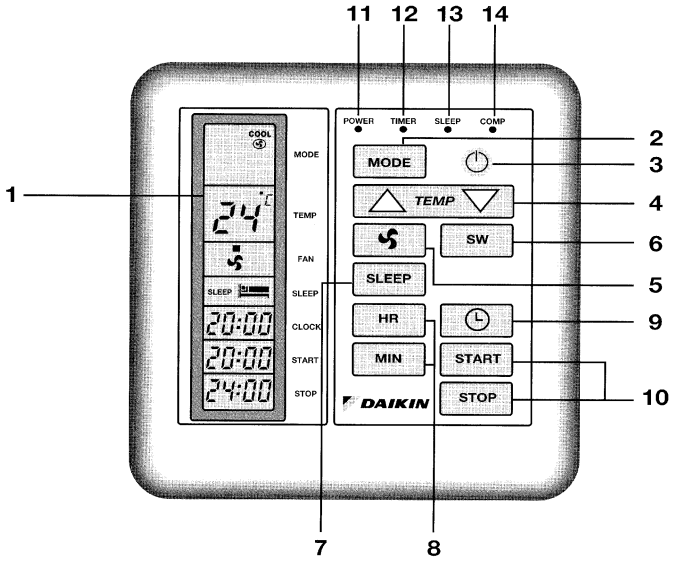


1. **Display :**
   - It displays the current settings.
2. **MODE selector button :**
   - It selects the operation mode. (FAN/COOL/DRY)
3. **ON/OFF button :**
   - Press this button once to start operation. Press once again to stop it.
4. **TEMPERATURE setting buttons :**
   - It changes the temperature setting.
5. **FAN speed button :**
   - It selects the air flow rate setting.
6. **SWEEP button :**
   - Press this button to turn on/off sweep motor.
7. **SLEEP button :**
   - Press this button once to start sleep function.
8. **HR-MIN buttons :**
   - Press these buttons to set the hour and the minute.
9. **CLOCK button :**
   - It sets the clock on the Remote unit.
10. **START-STOP button :**
    - Press these buttons to set timer.
11. **Operating indicator lamp (green) :**
    This lamp stays lit while the air conditioner runs.
12. **TIMER indicator lamp (green) :**
    This lamp stays lit while the timer is set.
13. **SLEEP indicator lamp (green) :**
    This lamp stays lit while the sleep function is set.
14. **COMP. (green) :**
    This lamp shows the ON/OFF status of the compressor.

3PN07204-2

### 2.2.2 Installation

DAIKIN

**AIR CONDITIONER**

Wired Remote Controller Kit

BRC1NU61

Installation manual

3PN07266-1B

READ THESE INSTRUCTIONS CAREFULLY BEFORE INSTALLATION.
KEEP THIS MANUAL IN A HANDY PLACE FOR FUTURE REFERENCE.

**To the installer of the unit:**

Instruct the user how to operate the unit following the operation manual.

**Caution**

Carefully read the installation manual attached to the indoor unit.

**ACCESSORIES**

Check if the following accessories are included with your unit.

| Name | Shape | Quantity | Name | Shape | Quantity |
|---|---|---|---|---|---|
| Wired remote controller | 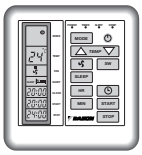 | 1 pc. | Wire harness | 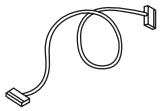 | 1 pc. |
| | | | Operation manual | 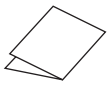 | 1 pc. |

**1 INSTALLATION OF WIRED REMOTE CONTROLLER**

- Do not throw the wired remote controller or give strong shock.
  Do not store it where it may get wet or directly exposed to the sun light.
- The distance operable by the wired remote controller from the unit is approximately 4 metres.
- Fasten the remote controller with screws at any provided 2 positions. (see picture as below).

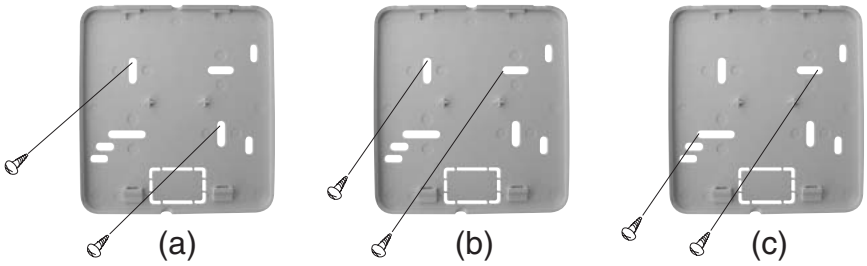


3PN07266B

**NOTE**

1. Choose the flattest place possible for the mounting surface. Be careful not to distort the shape of the lower part of remote controller by over-tightening the mounting screws.
2. Remove the insulation sheet under the back-up battery out before wiring.

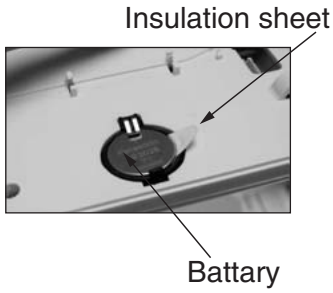


## 2 WIRING

① Remove the switch box and its cover mounted at the rear of the unit. (see pic. 1)

② Connect the wire to the connector P26 on the PC board assembly mounted inside the switch box. (Make sure to clamp the wire with the clamp material-see pic. 2)

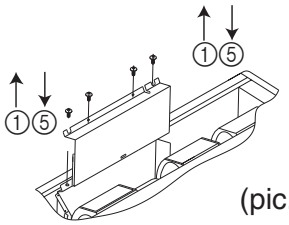


(pic. 1)

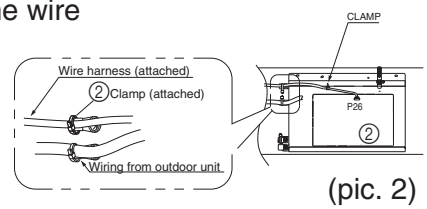


(pic. 2)

**NOTE**

When wiring, run the wiring away the power supply wiring in order to avoid receiving electric noise (external noise).

③ Connect the wire on the bottom of the back cover of remote controller. (see pic. 3)

④ Reattach the upper part of remote controller. Be careful not to pinch the wiring when attaching. (see pic. 4)

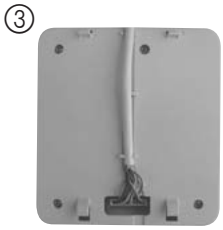


(pic. 3)

**NOTE**

Do not directly touch the PC board with your hand.

⑤ Put the switch box and its cover back to their place. (see pic. 1)

(pic. 4)

3PN07281A

## 2.3 KRC47-1A (for FDBG-NU and FDMG-NU) — Wired remote controller

### 2.3.1 Installation and operation

**Electronic Remote Controller Installation**

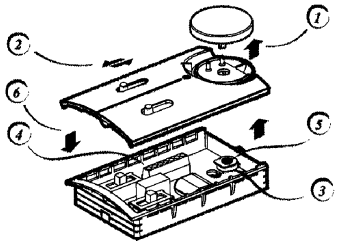

1. Pull the THERMOSTAT SETTING KNOB upward.

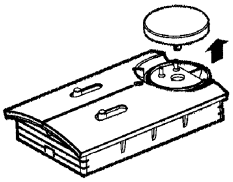

2. Slide the cover to the right and pull upward. Then the cover comes off.

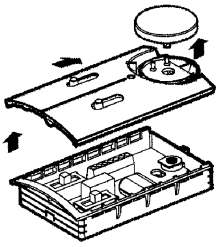

3. Tighten both screws to fix the remote controller to the wall.

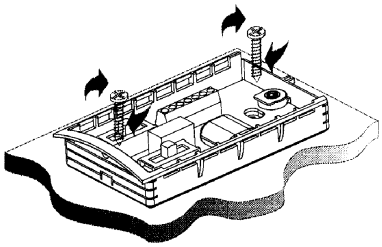

4. Connect wires to connectors following the wiring diagram.

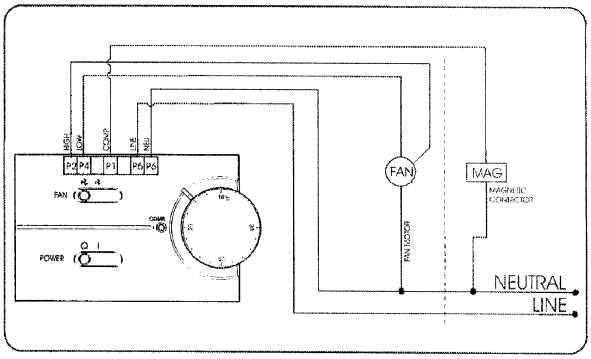


5. Fit the thermostat cover into the thermostat base. Make sure the thermostat slide knobs are on top of the slide switchs as shown.

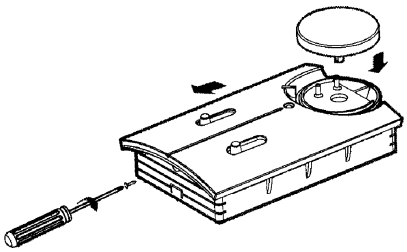

6. Insert the TEMPERATURE SETTING KNOB to the thermostat slot as shown make sure.

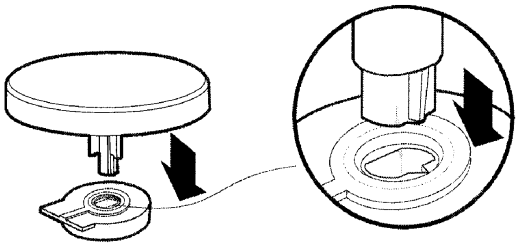

**Electronic Remote Controller**

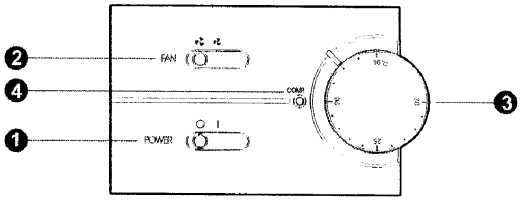


❶ POWER BUTTON

Slide the POWER BUTTON to | or ○ position to turn on or off the air conditioner.

❷ FAN BUTTON

Slide the FAN BUTTON to select the required fan speed: (HIGH). (LOW).

❸ TEMPERATURE SETTING KNOB

Turn the TEMPERATURE SETTING KNOB for adjusting the room temperature.The room temperature is adjustable between 16 to 30 °C . Set the required temperature to the position marked with The figures show correct temperature because this is electronic thermostat.

❹ COMPRESSOR STATUS LAMP

When the compressor is in operation.the COMPRESSOR STATUS LAMP lights. For protection of the compressor, each time the compressor stops , there will always be a minimum of 3 minute delay before the compressor restarts.

3P184720A

## 2.4 KRC47-2A / KRC47-4A (for FDBG-NU and FDMG-NU) — Wired remote controller

### 2.4.1 Installation and operation

# INSTALLATION and OPERATION MANUAL

**⚠ WARNING**

- Ask your dealer or qualified personnel to carry out installation work.
  Do not try to install this kit yourself.
  Improper installation may result in electric shocks or fire.
- Perform installation work in accordance with this installation manual.
  Improper installation may result in electric shocks or fire.
- All electrical work is carried out by qualified personnel according to local laws and regulations and this installation manual.
  An improper electrical construction may lead to electric shocks or fire.
- Make sure that all wiring is secured and no external forces act on the terminal connection or wires. When connecting the wiring between the units and remote controller, position the wires so that switch box cover can be securely fastened.
  Improper connections or positioning may result in electric shocks or fire.
- Before touching electrical parts, turn off the unit.

**⚠ CAUTION**

- Ground this kit.
  Do not connect the ground wire to gas or water pipes, a lightning conductor or a telephone ground wire.
  Incomplete grounding may result in electric shocks.
  - Gas pipe – Ignition or an explosion may occur if the gas leaks
  - Water pipe – Hard vinyl tubes are not effective grounds.
  - Lighting conductor or telephone ground wire
    – Electric potential may rise abnormally if struck by a lightning bolt.
- Install this kit, power cord and connecting wires at least 1 meter away from televisions or radios in order to prevent image interference or noise.
- Use the terminal cover when you connect the field wiring.
  Imcomplete setting may result in electric shocks.

## Meaning of warning and caution symbols

⚠ WARNING ·····Failure to observe a warning may result in death or serious injury.

⚠ CAUTION ·····Failure to observe a caution may result injury or damage to the equipment.

## COMPONENTS

Check the following components are included in this optional accessory before installation.

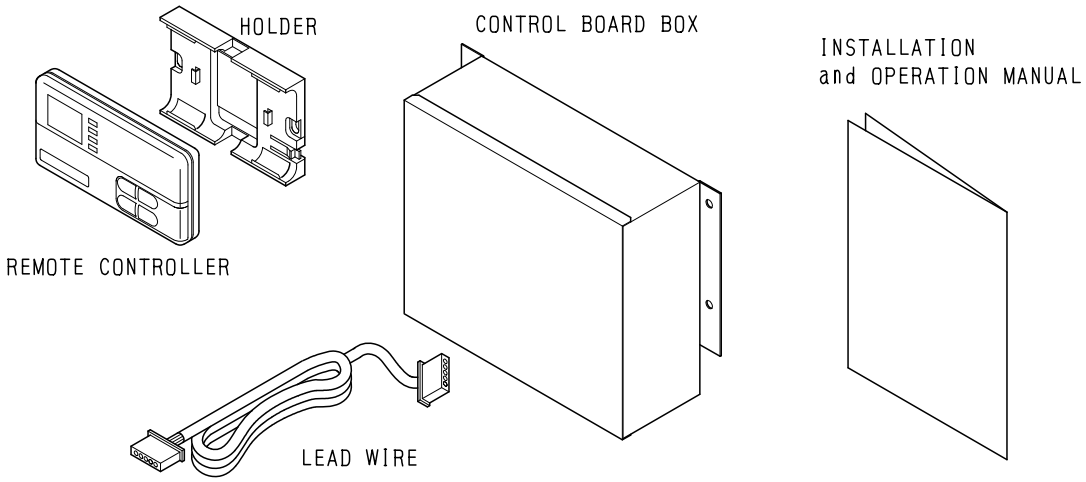


3P180225A

# INSTALLATION

Decide the situation of Control Board Box.
It is affected the situations of both the thermistor and the remote controller.
The length of lead wire——Thermistor: 1 m
—Remote Controller: 4 m

① Install the thermistor (in the control board box) at the inlet duct or the suction grille.
② Install the control board box on the wall or the pillar. Make sure the wire inlet is at the bottom of the box.
③ Install the remote controller with the holder.
When install them, the lead wire connect from under side.
(Refer to right fig.)
Be careful the direction of conector, when connect the lead wire to the remote controller. (See right fig.)

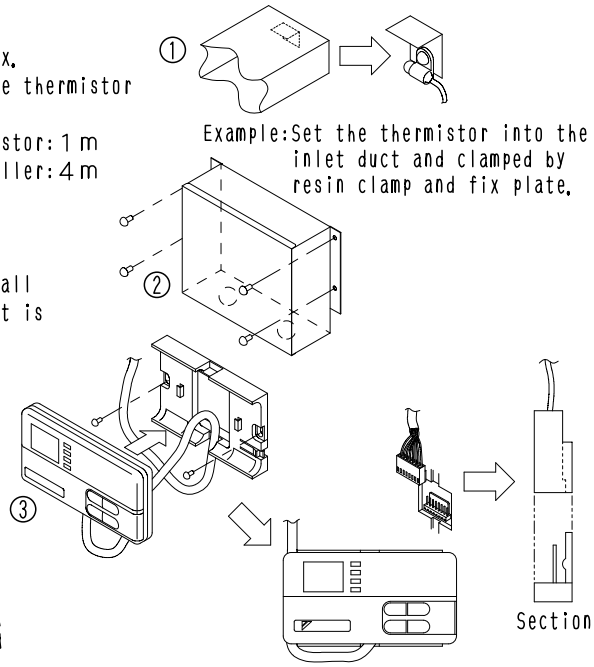


# ELECTRIC WIRING

## GENERAL INSTRUCTIONS

- All wiring, components and materials to be procured on site must comply with the applicable local and national codes.
- Use copper conductors only.
- All field wiring and components must be provided by licensed electrician.
- Unit shall be grounded in compliance with the applicable local and national codes.
- After wiring work, check power to the equipment shuts OFF when swich is shut OFF.

## Wiring specification

Use the wire shown below for between the unit and the control board box.

| Type | Size |
|---|---|
| UL1015 AWG18 equivalent | 0.75mm$^2$ each |

Connect the wiring between indoor and outdoor units, indoor/outdoor units and power supply, and indoor units and remote controller.
For details, refer to the installation manuals of indoor and outdoor units.

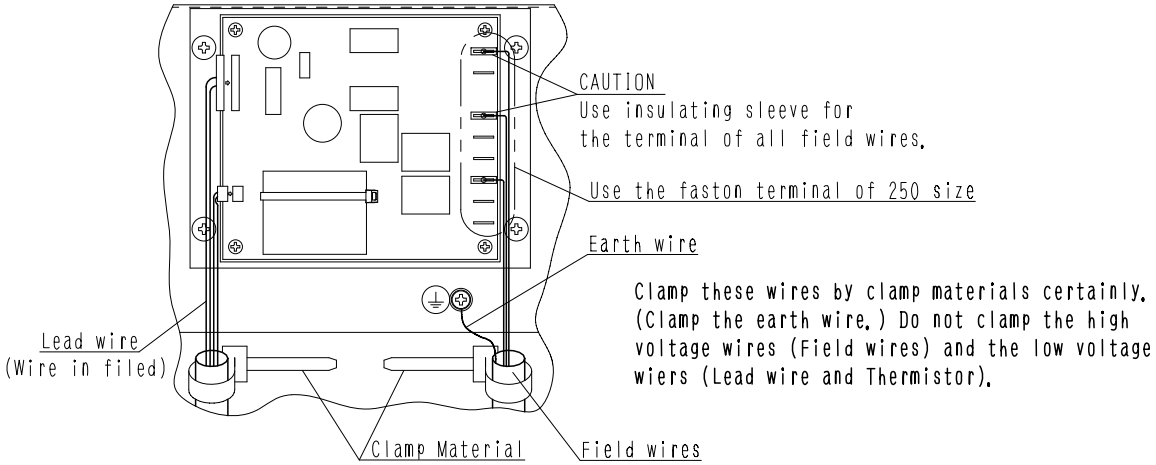


3P180225A

# HOW TO OPERATE(KRC47-2A)

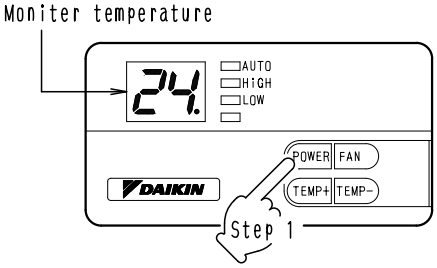


## Step 1 Power on/off

Press POWER button to turn on/off the air conditioner or select mode of operation. When turn on, it will operate according to the last setting.
The "Power" button will operate as the figures below.

OFF ⟷ COOL

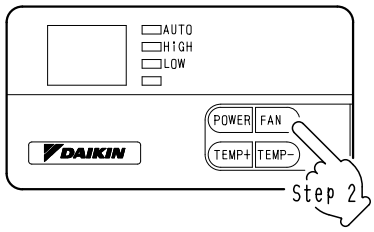


## Step 2 Fan

Press FAN button to select the fan speeds (higt, low or auto). The LED on display unit will show the fan speed status.

AUTO ➡ HIGH ➡ LOW

Auto fan speed
When the fan speed is put in auto speed the AUTO LED on the Display unit will be lit. the speed will be adjusted automatically according to the difference between the room temperature and setting temperature.
- If the difference is 1℃ or more, the speed is high.
- If the difference is less than zero, the speed is low.

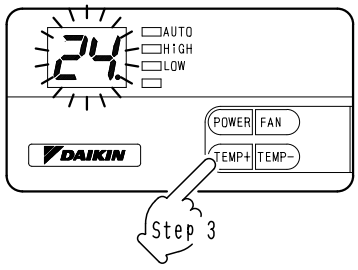


## Step 3 Operating mode

COOL

If the system is put in Cool mode, the COOL LED on the Display unit will be lit. The system will operate as the air conditioner. The compressor will
- operate if $T_{room} \geq T_{set} + 1$
- stop if $T_{room} \leq T_{set}$

However, the compressor is subjected to 3-minute delay protection each time it stops.

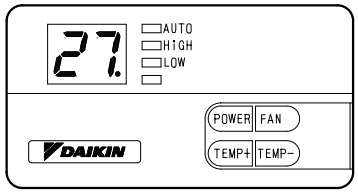


## Step 4 Temperature setting

The setting temperature can be set in the range of 16-32℃ by pressing TEMP+ or TEMP- button. The 7 segments LED on the Display unit will show the setting temperature in blinking for 5 seconds. After that it will go back to display the room temperature.

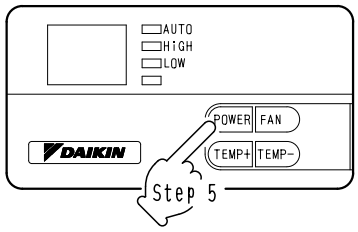


## Step 5 Stop

Press POWER button.
The operation lamp and Moniter temperature go out.
The air conditioner stops operating.

3P180226

# HOW TO OPERATE(KRC47-4A)

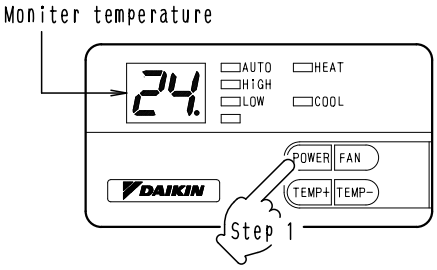


## Step 1 Power on/off

Press POWER button to turn on/off the air conditioner or select mode of operation. When turn on, it will operate according to the last setting.
The "Power" button will operate as the figures below.

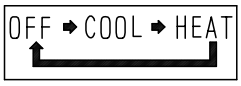


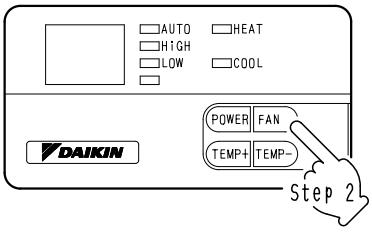


## Step 2 Fan

Press FAN button to select the fan speeds (higt, low or auto). The LED on display unit will show the fan speed status.

Auto fan speed
When the fan speed is put in auto speed the AUTO LED on the Display unit will be lit. the speed will be adjusted automatically according to the difference between the room temperature and setting temperature.
- If the difference is 1℃ or more, the speed is high.
- If the difference is less than zero, the speed is low.

## Step 3 Operating mode

### COOL

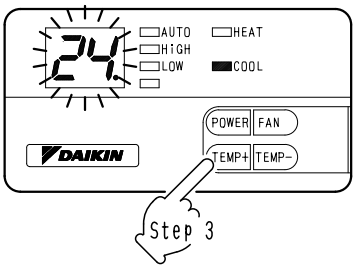


If the system is put in Cool mode, the COOL LED on the Display unit will be lit. The system will operate as the air conditioner. The compressor will
- operate if $T_{room} \geq T_{set} + 1$
- stop if $T_{room} \leq T_{set}$

However, the compressor is subjected to 3-minute delay protection each time it stops.

### Heat

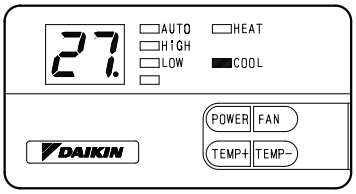


If the system is put in Head mode, the HEAT LED on the Display unit will be lit. The reversing valve relay that connected to heater will,
- operate if $T_{room} \leq T_{set} - 1$
- stop if $T_{room} \geq T_{set}$

When the system is turned off, the indoor fan will stop after the heater is OFF more than 30 seconds.

## Step 4 Temperature setting

The setting temperature can be set in the range of 16-32℃ by pressing TEMP+ or TEMP- button. The 7 segments LED on the Display unit will show the setting temperature in blinking for 5 seconds. After that it will go back to display the room temperature.

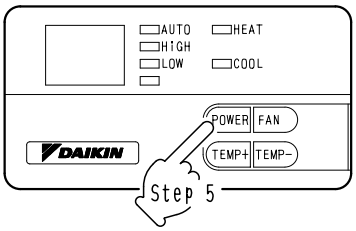


## Step 5 Stop

Press POWER button.
The operation lamp and Moniter temperature go out.
The air conditioner stops operating.

3P180226

## 2.5 BRC7C613W (for FHC-NU) — Wireless remote controller

### 2.5.1 Names and functions of the operating section

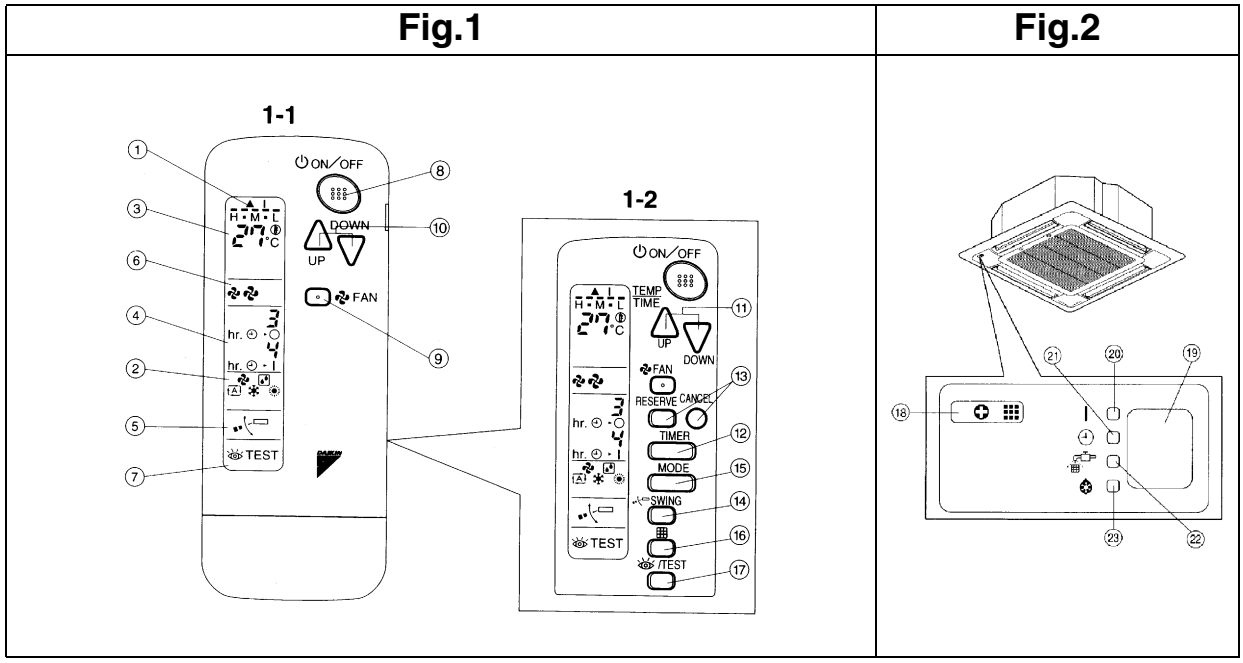


## NAMES AND FUNCTIONS OF THE OPERATING SECTION (Fig. 1, 2)

| | |
|---|---|
| ① | **DISPLAY " ▲ " (SIGNAL TRANSMISSION)**<br>This lights up when a signal is being transmitted. |
| ② | **DISPLAY "" "" "A" "" "" (OPERATION MODE)**<br>This display shows the current OPERATION MODE. For straight cooling type, "A" (Auto) and "" (Heating) are not installed. |
| ③ | **DISPLAY "" (SET TEMPERATURE)**<br>This display shows the set temperature. |
| ④ | **DISPLAY "" (PROGRAMMED TIME)**<br>This display shows PROGRAMMED TIME of the system start or stop. |
| ⑤ | **DISPLAY "" (AIR FLOW FLAP)** |
| ⑥ | **DISPLAY "" "" (FAN SPEED)**<br>The display shows the set fan speed. |
| ⑦ | **DISPLAY "/TEST" (INSPECTION/ TEST OPERATION)**<br>When the INSPECTION/TEST OPERATION BUTTON is pressed, the display shows the system mode is in. |
| ⑧ | **ON/OFF BUTTON**<br>Press the button and the system will start. Press the button again and the system will stop. |
| ⑨ | **FAN SPEED CONTROL BUTTON**<br>Press this button to select the fan speed, HIGH or LOW, of your choice. |
| ⑩ | **TEMPERATURE SETTING BUTTON**<br>Use this button for SETTING TEMPERATURE (Operates with the front cover of the remote controller closed.) |
| ⑪ | **PROGRAMMING TIMER BUTTON**<br>Use this button for programming "START and/or STOP" time. (Operates with the front cover of the remote controller opened.) |
| ⑫ | **TIMER MODE START/STOP BUTTON** |
| ⑬ | **TIMER RESERVE/CANCEL BUTTON** |
| ⑭ | **AIR FLOW DIRECTION ADJUST BUTTON** |
| ⑮ | **OPERATION MODE SELECTOR BUTTON**<br>Press this button to select OPERATION MODE. |
| ⑯ | **FILTER SIGN RESET BUTTON**<br>Refer to the section of MAINTENANCE in the operation manual attached to the indoor unit. |
| ⑰ | **INSPECTION/TEST OPERATION BUTTON**<br>This button is used only by qualified service persons for maintenance purposes. |
| ⑱ | **EMERGENCY OPERATION SWITCH**<br>This switch is readily used if the remote controller does not work. |
| ⑲ | **RECEIVER**<br>This receives the signals from the remote controller. |
| ⑳ | **OPERATING INDICATOR LAMP (Red)**<br>This lamp stays lit while the air conditioner runs. It flashes when the unit is in trouble. |
| ㉑ | **TIMER INDICATOR LAMP (Green)**<br>This lamp stays lit while the timer is set. |
| ㉒ | **AIR FILTER CLEANING TIME INDICATOR LAMP (Red)**<br>Lights up when it is time to clean the air filter. |
| ㉓ | **DEFROST LAMP (Orange)**<br>Lights up when the defrosting operation has started. |

(NOTE)
- For the sake of explanation, all indications are shown on the display in Figure 1 contrary to actual running situations.
- Fig. 1-2 shows the remote controller with the front cover opened.
- If the air filter cleaning time indicator lamp lights up, clean the air filter as explained in the operation manual provided with the indoor unit. After cleaning and reinstalling the air filter, press the filter sign reset button on the remote controller. The air filter cleaning time indicator lamp on the receiver will go out.

3P107422-15M

### 2.5.2 Installation

# SAFETY CONSIDERATIONS

Please read this “SAFETY CONSIDERATIONS” carefully before installing air conditioning equipment and be sure to install it correctly. After completing the installation, make sure at start up operation that the unit operates properly. Please instruct the customer how to operate the unit and keep maintenance.

Meaning of caution symbols

⚠ **CAUTION**..... If the caution is not observed, it may cause injury or damage to equipment.

**NOTE** ..... These instructions will ensure proper use of the equipment.

## ⚠ CAUTION

- Refer also to the installation manual attached to the indoor unit and the installation manual attached to the decoration panel.
- Confirm that following conditions are satisfied prior to installation.
  - * Ensure that noting interrupts the operation of the wireless remote controller. (Ensure that there is neither a source of light nor fluorescent lamp near the receiver. Also, ensure that the receiver is not exposed of direct sun light.)
  - * Ensure that the operaiton display lamp and other indicators are easy to see.
- The installation position of this kit is 1 position of the decoration panel. Therefore, confirm that its position is set so that the single form the wireless remote controller can be easily transmitted and its display can be easily seen.
- If both this kit and fresh air intake kit are installed, only one duct chamber shall be used. Refer to the installation manual of the fresh air intake kit (optional hand book).

# BEFORE INSTALLATION

## ACCESSORIES

Check if the following accessories are included with your unit.

| Name | Shape | Quantity | Name | Shape | Quantity | Name | Shape | Quantity |
|---|---|---|---|---|---|---|---|---|
| Receiver | | 1 set | Remote controller holder | | 1 pc. | Screw for installing remote controller holder | | 2 pcs. |
| | | | Dry cell battery LR03 (AM4) | | 2 pcs. | Operation manual | | 1 pc. |
| Wireless remote controller | | 1 pc. | | | | Sealing pad | 20 x 35 | 1 pc. |
| | | | Unit No. label | 1 2 3<br>1 2 3<br>1 2 3 | 1 pc. | Binding band | | 1 pc. |

## NOTE TO THE INSTALLER

Be sure to instruct the customer how to properly operate the system showing him/her the attached operation manual.

# REMOTE CONTROLLER INSTALLATION

## 〈 Installing wireless remote controller 〉

- Do not throw the remote controller or impose large shocks. Also, do not store where it may be exposed to moisture or direct sunlight.
- When operating, point the transmitting part of the remote controller in the direction of the receiver.
- The direct transmitting distance of the remote controller is approximately 7 meters.
- The signal cannot be transmitted if something such as curtains blocks the receiver and the remote controller.

- **Installing to a wall or a pillar**
  Slide the remote controller into the remote controller holder from the top.

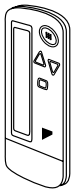

Fix the remote controller holder with the screws.

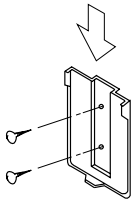

- **How to insert the batteries**
  ① Open the back cover of the remote controller by sliding it in the direction of the arrow.

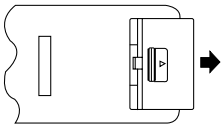

② Insert the attached dry cell batteries. Properly insert, set the batteries by matching the (+) and (–) polarity marks as indicated. Then close the cover as before.

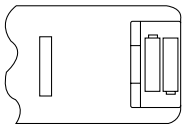

# RECEIVER INSTALLATION

## (1) Preparations before installation

Install this kit after installing the decoration panel.

① Remove the suction grille and the air filter according to the instructions in the installation manual attached to the decoration panel.

② Remove the control box lid according to the instructions in the installation manual attached to the indoor unit.

## (2) Determination of address and MAIN/SUB remote controller.

If setting multiple wireless remote controllers to operate in one room, perform address setting for the receiver and the wireless remote controller.
If setting multiple wired remote controllers in one room, change the MAIN/SUB switch of the receiver.

### SETTING PROCEDURE

① **Setting the receiver**
Through the small opening on the back of the receiver, set the wireless address switch (SS2) on the printed circuit board according to the table below.

| Unit No. | No. 1 | No. 2 | No. 3 |
|---|---|---|---|
| Wireless address switch (SS2) | 1 2 3 | 1 2 3 | 1 2 3 |

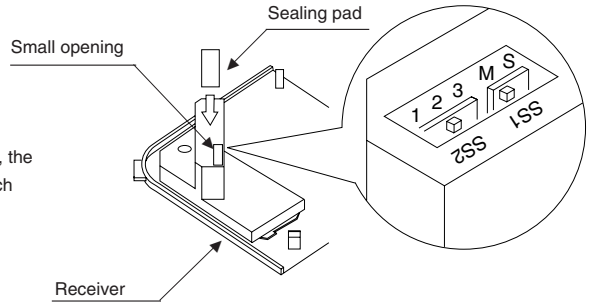


When using both a wired and a wireless remote controller for 1 indoor unit, the wired controller should be set to MAIN. Therefore, set the MAIN/SUB switch (SS1) of the receiver to SUB.

| | MAIN | SUB |
|---|---|---|
| MAIN/ SUB switch (SS1) | S M | S M |

**After completing setting, seal off the opening of the address switch and the MAIN/SUB switch with the attached sealing pad.**

2

3PA59585-9V

② **Setting the address of wireless remote controller (It is factory set to "1")**

〈 Setting from the remote controller 〉

① Hold down the [▦] button and the [/TEST] button for at least 4 seconds to get the Field Set mode. (Indicated in the display area in the figure at right).

② Press the [FAN] button and select a multiple setting (A/b). Each time the button is pressed the display switches between "A" and "b".

③ Press the "△ UP" button and "▽ DOWN" button to set the address.

→ 1 → 2 → 3 → 4 → 5 → 6

Address can be set from 1 to 6, but set it to 1 ~ 3 and to same address as the receiver. (The receiver does not work with address 4 ~ 6.)

④ Press the [RESERVE] button to enter the setting.

⑤ Hold down the [/TEST] button for at least 1 second to quit the Field Set mode and return to the normal display.

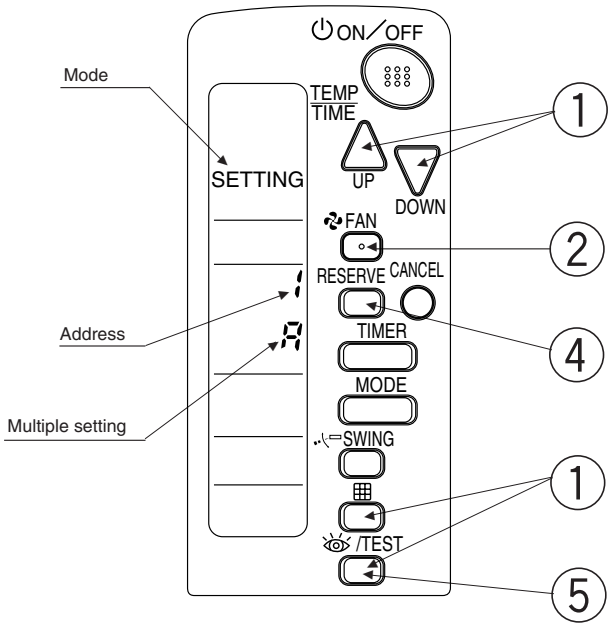


## 〈 Multiple settings A/b 〉

When the indoor unit is being operating by outside control (central remote controller, etc.), it sometimes does not respond to ON/OFF and temperature setting commands from this remote controller. Check what setting the customer wants and make the multiple setting as shown below.

| Remote controller | | Indoor unit | |
|---|---|---|---|
| Multiple setting | Remote controller display | To control other air conditions and units | For other than on left |
| A: Standard | All items displayed. | Commands other than ON/OFF and temperature setting accepted. (1 LONG BEEP or 3 SHORT BEEPS emitted) | |
| b: Multi System | Operations remain displayed shortly after execution. | All commands accepted (2 SHORT BEEPS) | |

③ Stick the Unit No. label on the air outlet of the decoration panel and the back of the wireless remote controller.

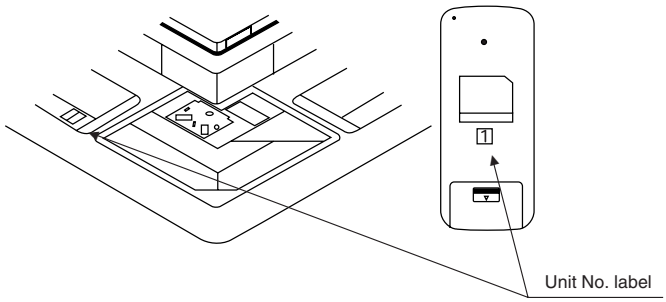


**PRECAUTIONS**

Set the Unit No. of the receiver and the wireless remote controller to be equal. If the settings differs, the signal from the remote controller cannot be transmitted.

3

3PA59585-9V

### (3) Receiver installation

① Detach the swing motor and the diagonally opposite decorative corner panel. This corner panel piece is not needed hereafter.

(For instructions on attaching/ detaching decorative panels, see the installation instructions provided with the original panel.)

**The receiver cannot be installed anywhere but in this corner.**

② Pull the relay harness from the receiver up to where the clamp meets the stopper, as shown at right.

③ Install the receiver where the decorative corner panel before. Proceed in the oppsite order in which you removed the corner panel.

④ Fit the relay harness under the tab on the decorative panel and connect it to connector X24A on the indoor unit PC board. Bundle the remaining harness with the included tie band so that it does not droop or get pinched in the suction grille.

⑤ Attach the lid to the indoor unit's switch box and the suction grille to the decorative panel.

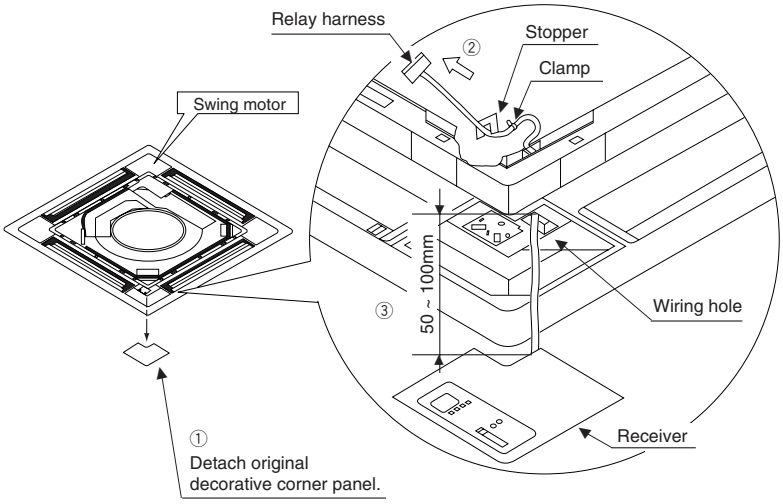


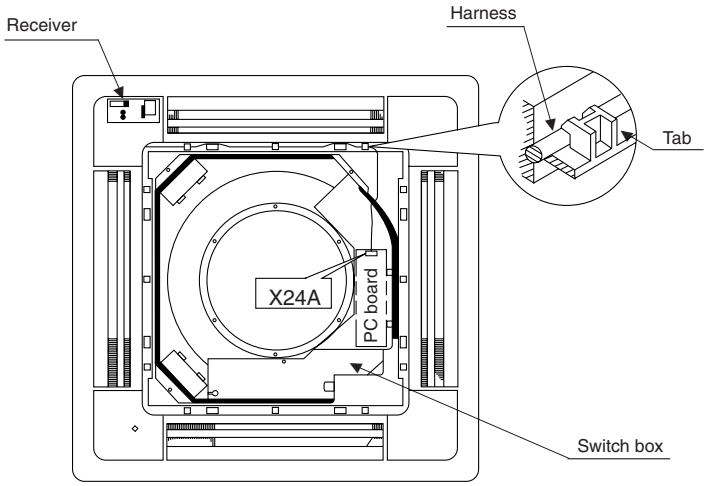


# FIELD SETTING

(If optional accessories are mounted on the indoor unit, the indoor unit setting may have to be changed. Refer to the instruction manual (optional hand book) for each optional accessory.)

### Procedure

① When in the normal mode, press the [/TEST] button for a minimum of four seconds, and the FIELD SET MODE is entered.

② Select the desired MODE NO. with the [MODE] button.

③ Push the " UP " button and select the FIRST CODE NO.

④ Push the " DOWN " button and select the SECOND CODE NO.

⑤ Push the [RESERVE] button and the present settings are SET.

⑥ Push the [/TEST] button to return to the NORMAL MODE.

(Example) If the time to clean air filter is set to "Filter Contamination-Heavy", set Mode No. to "10", FIRST CODE NO. to "0", and SECOND CODE NO. to "02".

4

3PA59585-9V

| MODE NO. | FIRST CODE NO. | DESCRIPTION OF SETTING | | SECOND CODE NO. NOTE) | | |
|---|---|---|---|---|---|---|
| | | | | 01 | 02 | 03 |
| 10 | 0 | Filter Contamination-Heavy/Light (Setting for spacing time of display time to clean air filter) (Setting for when filter contamination is heavy, and spacing time of display time to clean air filter is to be halved) | Ultra-long-life type | Light: Approx.10,000 hours | Heavy: Approx. 5,000 hours | — |
| | | | Long-life type | Light: Approx. 2,500 hours | Heavy: Approx. 1,250 hours | |
| | | | Standard type | Light: Approx. 200 hours | Heavy: Approx. 100 hours | |
| | 1 | Long-life filter type (Setting of filter sign indication time) (Change setting when Ultra-long-life filter is installed) | | Long-life filter | Ultra-long-life filter (1) | — |
| | 3 | Spacing time of display time to clean air filter count (Setting for when the filter sign is not to be displayed) | | Display | Do not display | — |
| 11 (Sprit system) | 0 | Setting the number of connected simultaneous operation system indoor units. | | Pair | Twin | Triple |
| 12 (VRV system) | 1 | ON/OFF input from outside (Set to enable starting/stopping from remote.) | | Forced OFF input | ON/OFF | — |
| | 2 | Thermostat differential changeover (Set when using remote controller thermostat sensor.) | | 1°C | 0.5°C | — |
| 13 | 0 | High ceiling setting (Setting for when installed in a ceiling higher than 2.7 m) | | Normal | High Ceiling 1 | High Ceiling 2 |
| | 1 | Selection of Air Flow Direction (Setting for when a blocking pad kit has been installed) | | F | T | W |
| | 4 | Air Flow Direction Range Setting | | Upper | Normal | Lower |

NOTE) The SECOND CODE NO. is factory set to “01”. However, for the following cases it is set to “02”.

- Air Flow Direction Range Setting

Do not use any settings not listed in the table.

For group control with a wireless remote controller, initial settings for all the indoor units of the group are equal. (For group control, refer to the installation manual attached to the indoor unit for group control.)

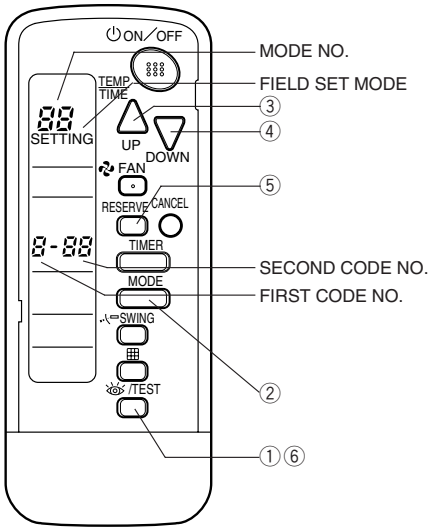


# TEST OPERATION

- Perform test operation according to the instructions in the installation manual attached to the indoor unit.
- After refrigerant piping, drain piping, and electric wiring, operate according to the table to protect the unit.

〈 **PRECAUTIONS** 〉

1. Refer to malfunction diagnosis label attached to the unit if it does not operate.
2. Refer to the installation manual attached to the outdoor unit for individual operation system types.

| Order | Operation |
|---|---|
| (1) | Open gas side stop valve. |
| (2) | Open liquid side stop valve. |
| (3) | Electrify crank case heater for 6 hours. (Not necessary for cooling type units) |
| (4) | Set to cooling with the remote controller and push ON/OFF button to start operation. |
| (5) | Push /TEST button twice and operate in TEST OPERATION mode for 3 minutes. |
| (6) | Push SWING button and confirm its operation. |
| (7) | Push /TEST button and operate normally. |
| (8) | Confirm its function according to the operation manual. |

5

3PA59585-9V

## 2.6 BRC7NU66 (for FH-NU) — Wireless remote controller

### 2.6.1 Names and functions of the operating section

**FIgure 1**

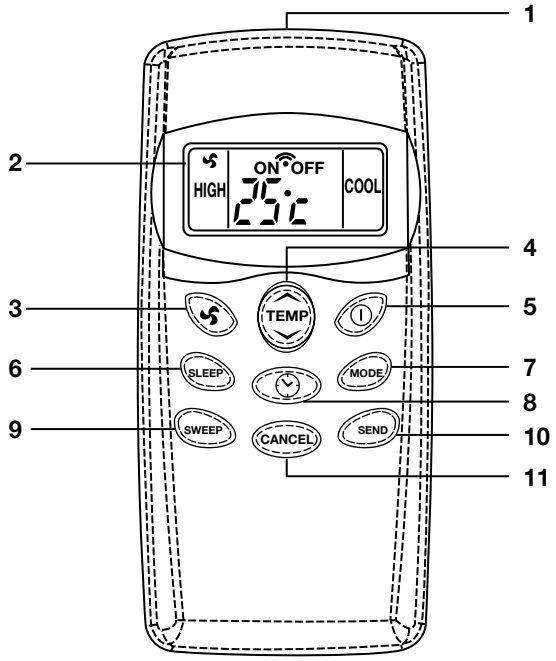


1. **Signal transmitter :**
   - It sends signals to the indoor unit.
2. **Display :**
   - It displays the current settings.
3. **FAN speed button :**
   - It selects the air flow rate setting.
4. **TEMPERATURE setting buttons :**
   - It changes the temperature setting.
5. **ON/OFF button :**
   - Press this button once to start operation. Press once again to stop it.
6. **SLEEP button :**
   - Press this button once to start sleep function.
7. **MODE selector button :**
   - It selects the operation mode (FAN/COOL/DRY).
8. **TIMER button :**
9. **SWEEP button :**
   - Press this button to turn on/off sweep motor.
10. **SEND button :**
    - Press this button to confirm timer setting.
11. **CANCEL button :**
    - Press this button to cancel timer setting.

3PN07204-1A

**FIgure 2**

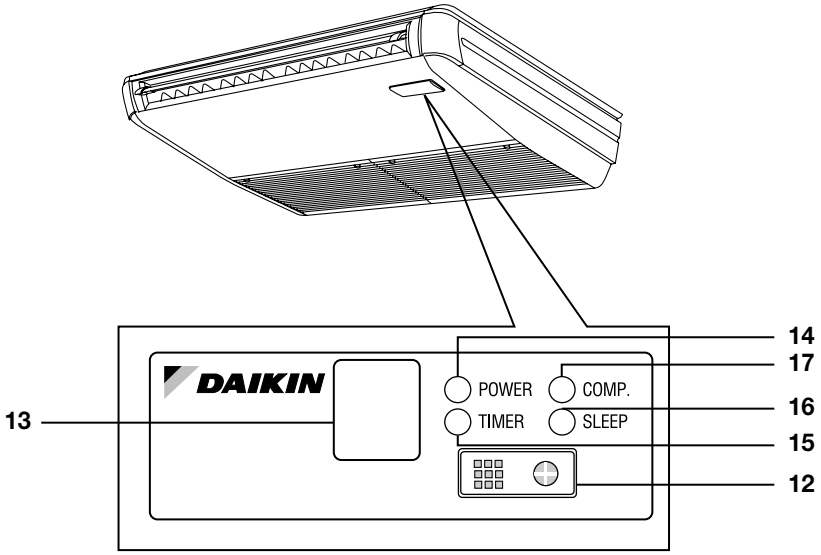


12. **Emergency operation switch :** This switch is readily used if the remote controller does not work.
13. **Receiver :** This receives the signals from the remote controller.
14. **Operating indicator lamp (green) :** This lamp stays lit while the air conditioner runs.
15. **TIMER indicator lamp (green) :** This lamp stays lit while the timer is set.
16. **SLEEP indicator lamp (green) :** This lamp stays lit while the sleep function is set.
17. **COMP. (green) :** This lamp shows the ON/OFF status of the compressor.

3PN07204-1A

## 2.6.2 Installation

DAIKIN

AIR CONDITIONER Wireless Remote Controller Kit Installation manual

BRC7NU66

READ THESE INSTRUCTIONS CAREFULLY BEFORE INSTALLATION.
KEEP THIS MANUAL IN A HANDY PLACE FOR FUTURE REFERENCE.

2PN07169-1A

**To the installer of the unit:**

Instruct the user how to operate the unit following the operation manual.

**Caution**

- Carefully read the installation manual attached to the indoor unit.
- Confirm that the place where the unit will be installed satisfies the following conditions:
  - Where the wireless remote controller is operable.
    (No strong light source or inverter fluorescent lamp must be near the signal receiver.
    The signal receiver must not be directly exposed to the sun light.)
  - Where the operation display lamp is easily visible.

**ACCESSORIES**

Check if the following accessories are included with your unit.

| Name | Shape | Quantity | Name | Shape | Quantity | Name | Shape | Quantity | Name | Shape | Quantity |
|---|---|---|---|---|---|---|---|---|---|---|---|
| Receiver assembly | | 1 set | Wireless Remote controller & holder | | 1 set | Dry cell battery LR 03 (AM4) | | 2 pcs. | Wire harness | | 1 pc. |
| | | | | | | Wire clip | | 1 pcs. | Operation manual | | 1 pc. |

### 1 INSTALLATION OF WIRELESS REMOTE CONTROLLER

<Installation of wireless remote controller>

- Do not throw the wireless remote controller or give strong shock.
  Do not store it where it may get wet or directly exposed to the sun light.
- Direct the wireless remote controller transmitting part toward the receiving part of the unit.
- The distance operable by the wireless remote controller from the unit is approximately 6 metres.
- If an obstacle such as curtains blocks the signal between the receiver and the wireless remote controller, the system does not operate.

- Installing to a wall or a pillar

  Fix the remote controller holder with the screws.

  Slide the wireless remote controller into the remote controller holder from the top.

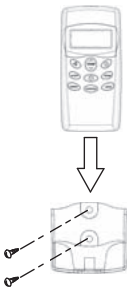

- How to set the batteries

  ① Slide and open the back cover in the direction shown by the arrow.

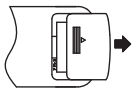

  ② Set the attached dry cell batteries to the place.
  Make sure to match the polarity (+) (-) of the batteries to the marks indicated where the batteries are to be placed when setting the batteries.

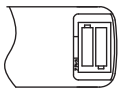

### 2 INSTALLATION OF RECEIVER ASSEMBLY

(1) Preparation before installation

Remove the suction grille and the piping side decorative panel according to the installation manual attached to the indoor unit.

(2) Installation of receiver assembly

- Remove the decorative name plate mount of the indoor unit.

① Insert the tip of the flat blade (-) screwdriver into the place shown by black circle ● (both A and B) of the name plate.
② Tilt the screwdriver in the direction shown by the arrow. (both A and B)
③ Pull the entire name plate mount toward yourself and remove one side.
④ Do the same to the remaining two places. (C and D)
⑤ Remove the entire name plate.
(the name plate mount is no longer required.)

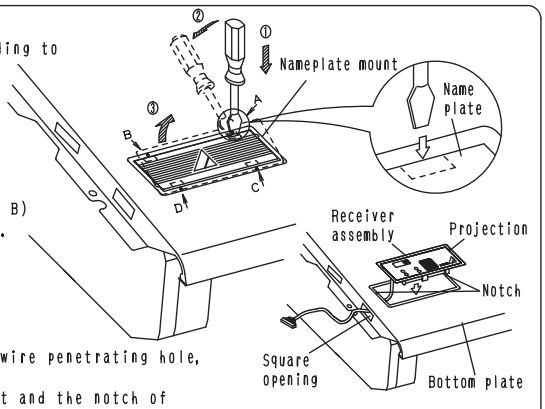


- Installation of receiver assembly
  After passing the wire harness of the receiver through the electric wire penetrating hole, set the receiving part in the direction shown by the arrow.
  (Fix the receiver after matching the projection of the receiving part and the notch of the bottom frame.)

2PN07169A

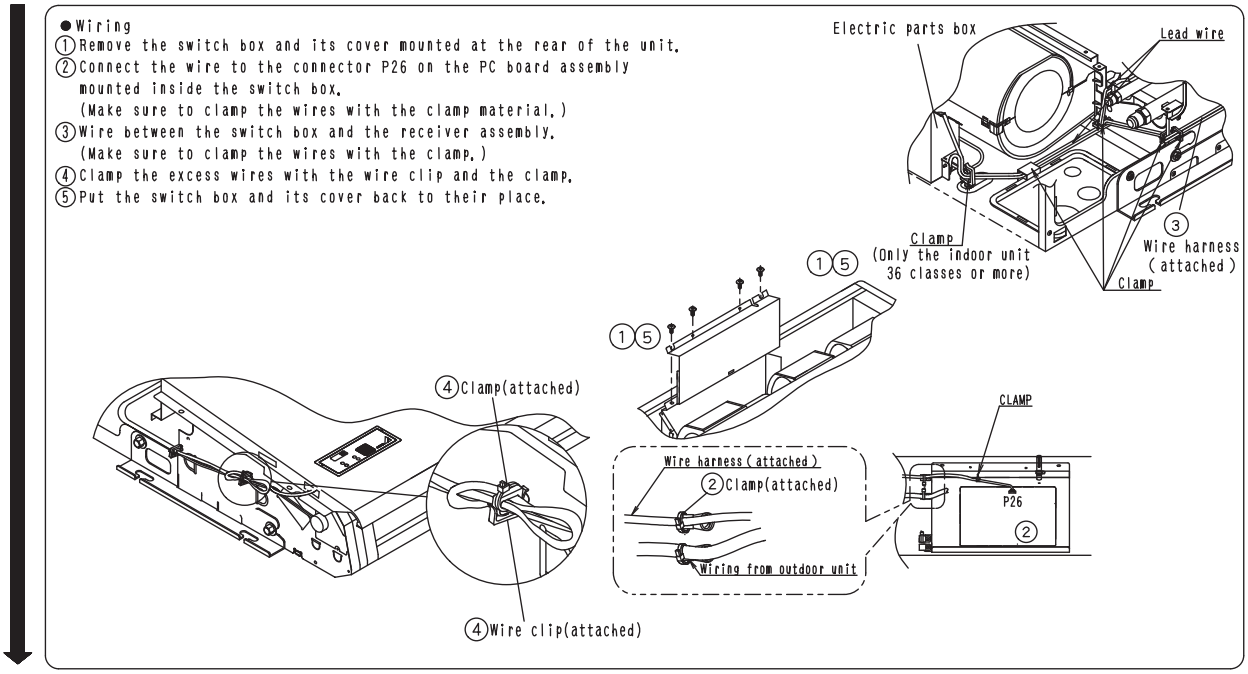


## ③MOUNTING SUCTION GRILLE AND DECORATIVE PANEL

●Put the piping side decorative panel and the suction grille back to the place in the reverse order according to the installation manual attached to the indoor unit.

## ④TEST RUN

●Perform test run according to the installation manual attached to the indoor unit.

2PN07219A

# 3. FHC-NU

## 3.1 BYC125K-W1 / BYC125K-W2 — Decoration panel

# BEFORE INSTALLATION

**PRECAUTIONS**

- Refer also to the installation manual attached to the indoor unit.

**ACCESSORIES**

- Installation manual.

**NOTE TO INSTALLER**

Be sure to instruct the customer how to properly operate the system showing him/her the attached operation manual.

# PREPARATION OF DECORATION PANEL

<<For this unit, you are able to select air flow directions. To discharge air in 2 or 3 directions, it is necessary to purchase optional blocking pad kit.>>

**HANDLING OF DECORATION PANELS**

- Never place the panel facing down nor lean it against a wall nor leave it on a projecting object.
- Never touch or put pressure on the swing flap.
  (The swing flap may malfunction.)

(1) Remove the suction grille from the decoration panel.

1) Push the suction grille lever inward and lift up the lever side. (Refer to Fig. 1.)

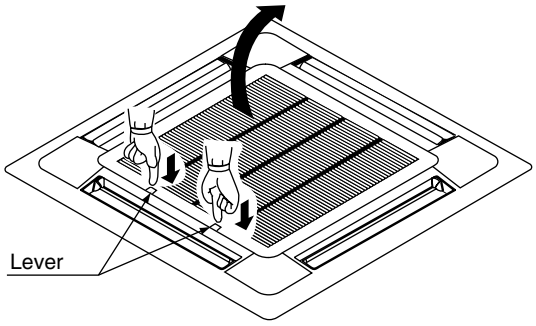


Fig. 1

2) Detach the suction grille from the decoration panel by lifting the grille up approximately 45 degrees. (Refer to Fig. 2.)

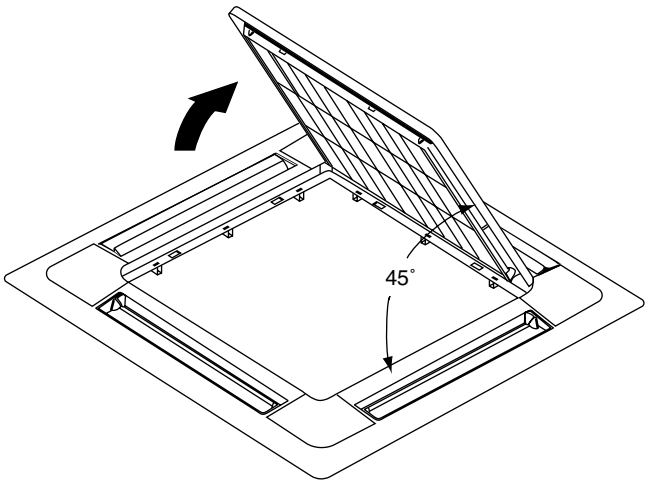


Fig. 2

(2) Remove the service cover on the corner.
Slide the service cover outward to remove. (Refer to Fig. 3.)

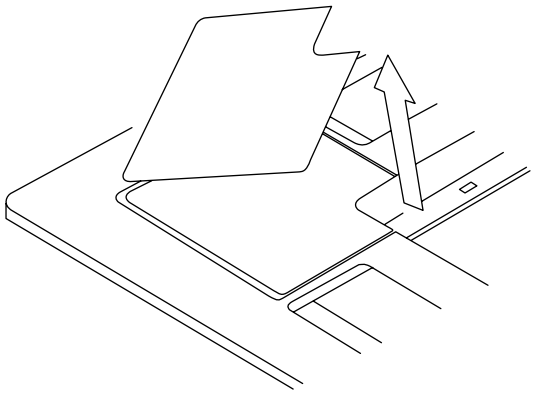

Fig. 3

3PA64319-9L

# INSTALLATION OF THE DECORATION PANEL TO THE INDOOR UNIT BODY

<<Refer to the installation manual attached to the indoor unit for the installation of the indoor unit.>>

(1) Set the decoration panel to the indoor unit body by matching the position of the swing flap motor of the decoration panel to the piping position of the indoor unit as shown in Fig. 4.

(2) Install the decoration panel.
  1) Temporarily install the decoration panel to the indoor unit by hanging the latch on the opposite side of the swing flap motor of the decoration panel to the hook of the indoor unit body. (2 positions)
  2) Temporarily hang the remaining 2 latches to the hooks on the sides of the indoor unit.
     (Be careful not to let the swing motor lead wire get caught in the sealing material.)
  3) Screw all 4 hexagon head screws located right beneath the latches in approximately 5 mm. (Panel will rise.)
  4) Adjust the decoration panel by turning it to the arrowed direction in Fig. 4 so that the ceiling opening is completely covered.
  5) Tighten the screws until the thickness of the sealing material between the decoration panel and the indoor unit body reduces to 5–8 mm.

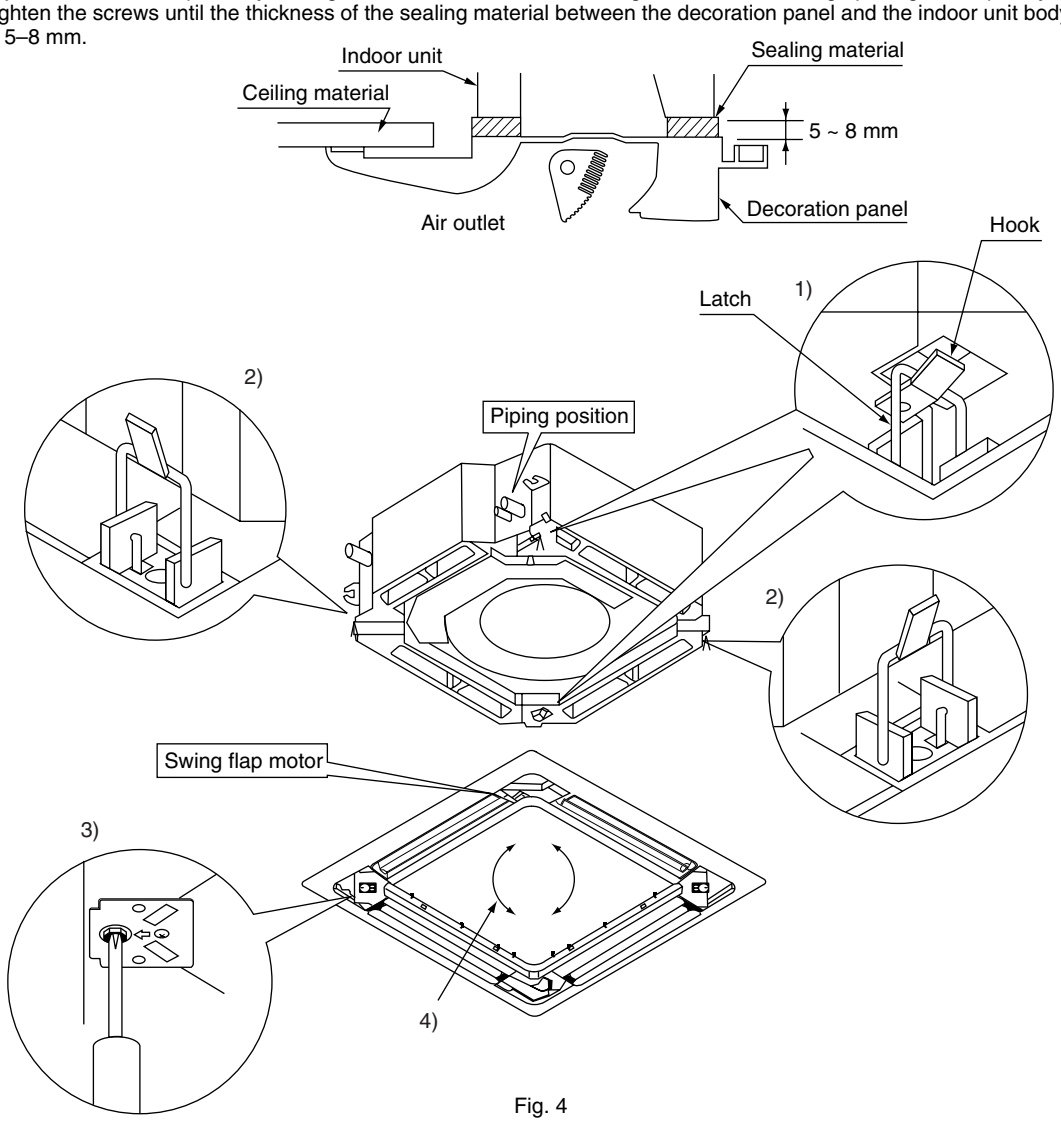


Fig. 4

**PRECAUTIONS**

- Improper screwing of the screws may cause the troubles shown in Fig. 5. Screw properly.

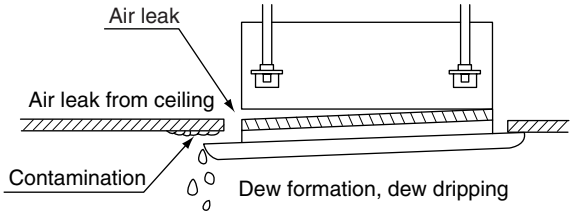


Fig. 5

3PA64319-9L

- If gap is still left between the ceiling and the decoration panel after screwing the screws, readjust the indoor unit body height. (Refer to Fig. 6.)

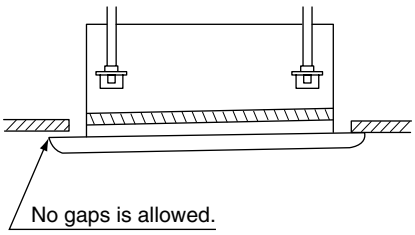

Adjustment of the indoor unit body height from the holes in the corner of the decoration panel is possible if the indoor unit is kept leveled and the drain piping, etc. is unaffected.

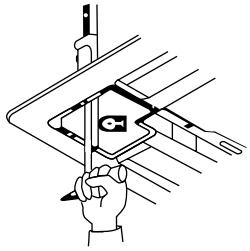

Fig. 6

(3) Wiring of the decoration panel (Refer to Fig. 7.)

6) Connect the connectors for swing flap motor lead wire installed on the decoration panel.

If connectors are not connected, the malfunction display (A7) appears on the remote controller. Connect the connectors properly.

Make sure that the swing flap motor lead wire is not caught between the indoor unit and the decoration panel.

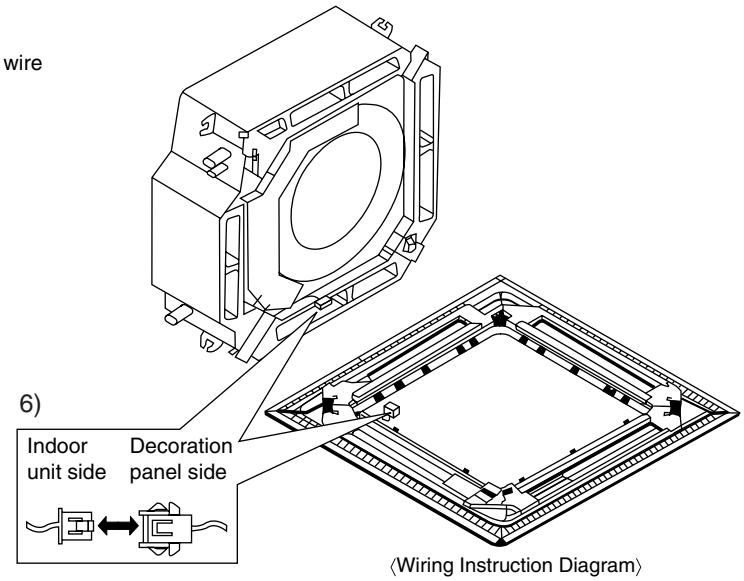


〈Wiring Instruction Diagram〉
(It differs from the actual state.)

Fig. 7

# INSTALLATION OF SUCTION GRILLE AND SERVICE COVER

(1) Install the suction grille.
Install by reversing the procedure shown in “PREPARATION OF DECORATION PANEL”.
It is possible to install the suction grille in 4 directions by turning the suction grille.
Change the direction when adjusting the direction of the suction grille of multiple units or in meeting customers’ demands.

NOTE)
Be careful not to get swing flap motor lead wire get caught when installing the suction grille.

(2) Install the service cover on the corner.

1) Attach the string of the service cover to the pin of the decoration panel as in Fig. 8.

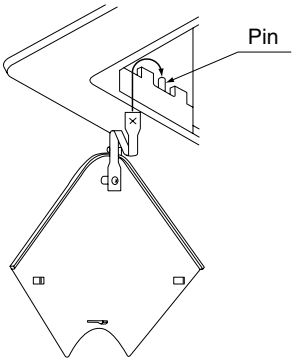


Fig. 8

2) Install the service cover over the decoration panel.

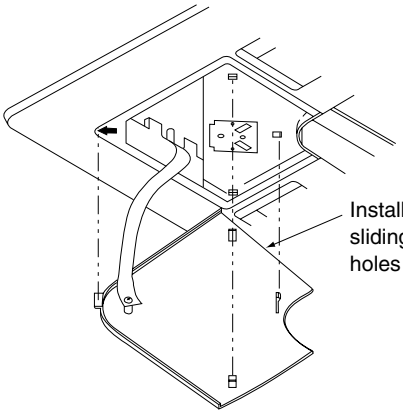


3PA64319-9L

## 3.2 KDBHJ55K160 — Sealing member of air discharge outlet

### Caution

- Refer to the installation manual for both indoor unit and the decoration panel.
- When you install other optional kit, it may not be possible to select the 3-way or 2-way air discharge. For details, refer to the manual for the optional kit or the catalogue.

**●Contents of kit** Prior to installation make sure you have the complete kit of parts.

| Name | Sealing material(A) | Sealing material(B) | Sealing material(C) | Sealing material(D) |
|---|---|---|---|---|
| Quantity | 1 piece | 1 piece | 1 piece | 1 piece |
| Shape and marking | | | | |

| Name | Insulation for top plate | | Insulation for side plate | | | Moisture absorber for bell-mouth | | Moisture absorber for horizontal vane |
|---|---|---|---|---|---|---|---|---|
| Quantity | 1 piece | 1 piece | 1 piece | 2 pieces | 1 piece | 2 pieces | 1 piece | 5 kinds |
| Shape and marking | ① | ② | ③ 240×615 | ④ 240×540 | ⑤ 240×490 | ⑥ | ⑦ | ⑧ |

### ① The direction of air discharge and the positioning of sealing material

**(1)Selection of air outlet**

- Select the direction of air discharge from the following table according to the location of the indoor unit. Refer to ② **Setting of indoor unit** for setting position number.
  Refer to the installation manual attached to the indoor unit for selection of installation location.

**Caution**

Never select the direction of air discharge other than the following pattern. (You may have a condensation problem.)

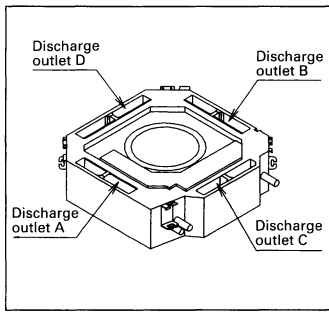


| Setting position No. | 02 | 02 | 02 | 02 |
|---|---|---|---|---|
| 3-way discharge | 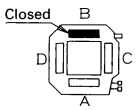 | 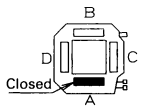 | 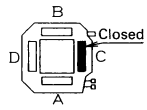 | 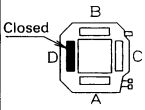 |
| Setting position No. | 03 | 03 | 03 | |
| 2-way discharge | 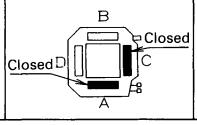 | 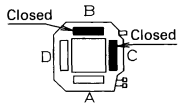 | 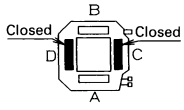 | |

**(2)Installation of sealing material**

Make sure each symbol of sealing materials corresponding to that of air outlet.

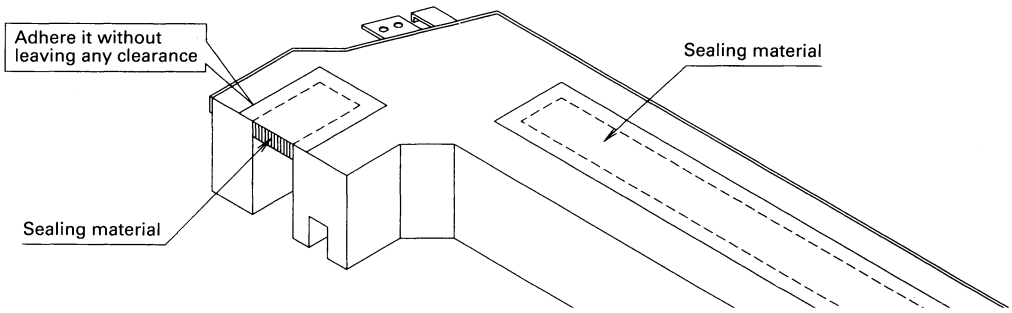


J : 1P012222B

## ② Setting of indoor unit

It is required to make a local setting on the remote controller according to the installation of indoor unit.
The direction of air discharge should also be set by the remote controller.

- The 3 different kind of setting such as "Mode number", "The setting switch number" and "The setting position number" should be made by the remote controller.
- Refer to the item of "Local setting" on the operation manual of the remote controller for the setting procedure.

(1) Set according to the table of "The direction of air discharge and the installation of the sealing material".
Check the setting position number corresponding to the direction of air discharge.

(2) Refer to the item of "Local setting" of the operation manual for the remote controller and change the setting according to the position determined by (1) as shown in the table below.

| | Mode number | Setting switch number |
|---|---|---|
| Setting of the direction of air discharge | 13 (23) | 1 |

(Ceiling Height is reference value)

| | | FH(Y)C35~71KVE, FHC18~26NUV1, FHC18NUV2S, FHC21KV2S | | | FH(Y)C100~140KVE, FHC30~48NUV1, FHC24~48NUV2S | | | Ceiling height setting position number |
|---|---|---|---|---|---|---|---|---|
| | | 4-way air outlet | 3-way air outlet | 2-way air outlet | 4-way air outlet | 3-way air outlet | 2-way air outlet | |
| Ceiling height (m) | Standard | ~2.7 | ~3 | ~3.5 | ~3.2 | ~3.6 | ~4.2 | 01 |
| | Semi-high | 2.7~3 | 3~3.3 | 3.5~3.8 | 3.2~3.6 | 3.6~4 | ~4.2 | 02 |
| | High | 3~3.5 | 3.3~3.5 | —— | 3.6~4.2 | 4~4.2 | —— | 03 |

**Caution**
Refer to the table for the height of the ceiling for each direction of air outlet. (The setting of the ceiling height is also required.)

(B0234)

## ③ Installation of the insulation

(1) Installation to the side plate
Adhere insulation for side plate ③ ~ ⑤ to the side of indoor unit.

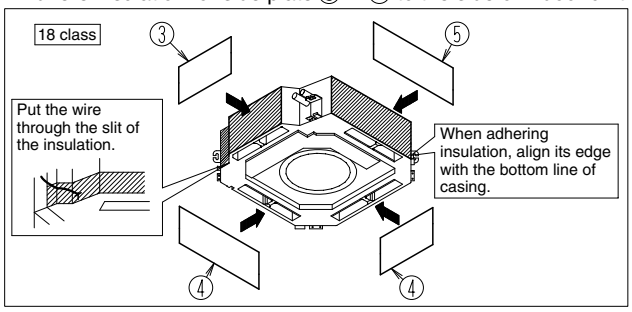


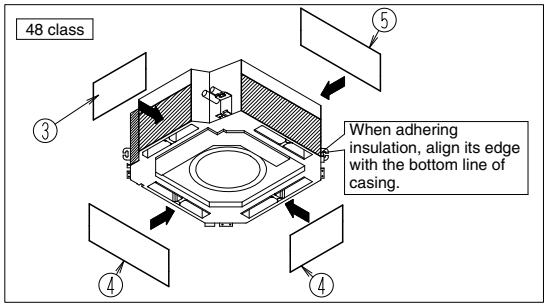


(2) Installation to the top plate
Adhere insulation for top plate ①, ② to the top of the indoor unit.

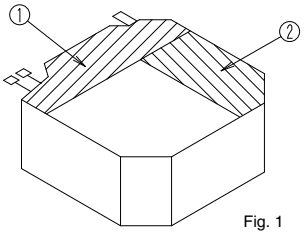


Fig. 1

(3) Adhere the moisture absorber for horizontal vane to the edge of the horizontal vane of air outlet (Fig. 2).
(Choose the same color as panel.)

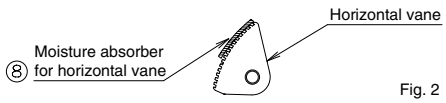


Fig. 2

Align it with the upper edge of horizontal vane.

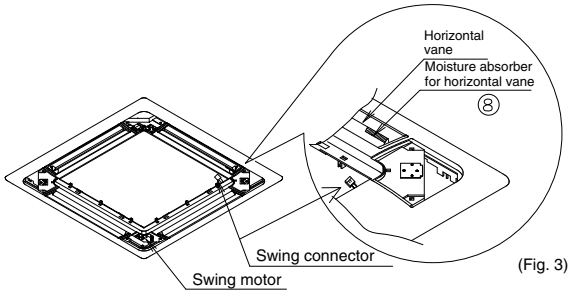


(Fig. 3)

(4) Adhere the moisture absorber ⑥ in accordance with the reference surface without wrinkles. (Fig. 4)
Adhere the moisture absorber ⑦ in accordance with the reference line ⑦. (Fig. 5)

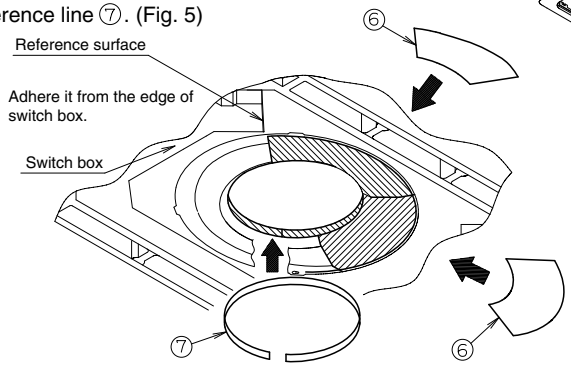


Fig. 4

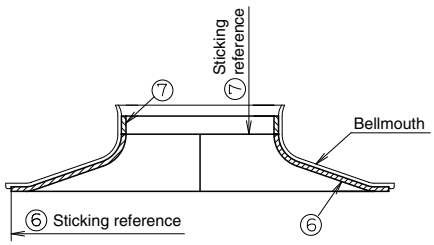


Fig. 5

JC : 1P012222B

## 3.3 KDBP55H160WA — Panel spacer

**KDBP55H160WA**

| Item \ Model | | KDBP55H160WA |
|---|---|---|
| Exterior | | White |
| Material | | Outside frame: Resin<br>Insulation: Polyethylene foam |
| Accessories | | Fixture : 4 pieces<br>Screws : 1 set<br>Sealing material : 1 set<br>Installation manual |
| Mass (Weight) | kg | 1.2 |

- Using the panel spacer in areas of the ceiling with limited space makes it possible to install the air conditioner.
- Hides the gap between the decoration panel and the ceiling.

**Caution**

- When the panel spacer is installed, it is not possible to have 2-way air outlet.
- Refer to the installation manual for both indoor unit and the panel spacer for its installation.

3

**Dimensions** **Unit:mm**

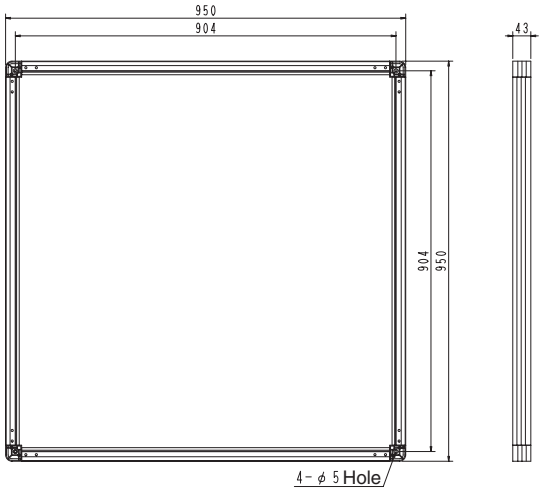


J : D3K04626

## Installation

### Combination table

| | | |
|---|---|---|
| Panel spacer | KDBP55H160FA | KDBP55H160WA<br>KDB55K160WA |
| Decoration panel | BYCP125K-W1 | BYCP125D-W1<br>BYC125K-W1<br>BYC125KJW1<br>BYC125K-W1S |

### Caution

- **When the Panel Spacer is installed, it is not possible to have 2-way air outlet.**
- Refer to the installation manual for both indoor unit and the Panel spacer for its installation.

### Contents of kit

Check if following parts are included with your kit.

| Name | Panel spacer frame | Resin corner part | Fixing metal | Screw |
|---|---|---|---|---|
| Quantity | 4 PCS. | 4 PCS. | 4 PCS. | 28 PCS. |
| Shape・number | ① 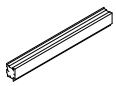 | ② 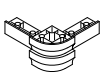 | ③ | ④ M4×10 Tapping screw (Class 2) |

| Name | Sealing material | | Caution label | Others |
|---|---|---|---|---|
| Quantity | 2 PCS. | 2 PCS. | 1 PC. | • This Installation Manual |
| Shape・number | ⑤  | ⑥  | ⑦  | |

### ❶ Preparation of the Decoration panel

- Handle the decoration panel with care.

**Never place the panel face down, or lean the panel against wall or place on the projective object.**
**(It causes the dent or damage of the surface of the panel or damage of swing motor.)**

(1) Remove the suction grill from the decoration panel.
( Refer to the installtion manual of the decoration panel how to remove.)

(2) Place the panel face down on the corrugated board or the vinyl sheet to protect the surface of the panel.

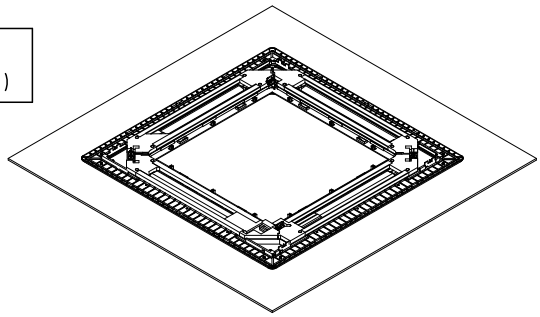

### ❷ Installation of the indoor unit

Adjust the height of the indoor unit.

**Be sure the piping will not contact with the ceiling joist etc. after adjusting the height.**

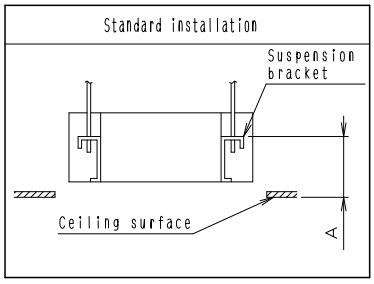


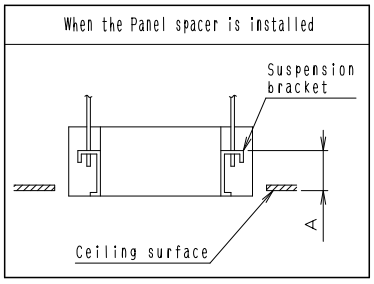


| Decoration panel | A(mm) |
|---|---|
| BYCP125D-W1<br>BYC125K-W1<br>BYC125KJW1<br>BYC125K-W1S | 145~150 |
| BYCP125K-W1 | 125~130 |

| Decoration panel | A(mm) |
|---|---|
| BYCP125D-W1<br>BYC125K-W1<br>BYC125KJW1<br>BYC125K-W1S | 105~110 |
| BYCP125K-W1 | 85~90 |

C : 1P136564E

## ❸ Assembly of panel spacer

(1) Assemble the panel spacer frame ① and the plastic corner joint ② temporarily.

(2) Fix with the screws ④ from the top.
(4 screws in each corner)

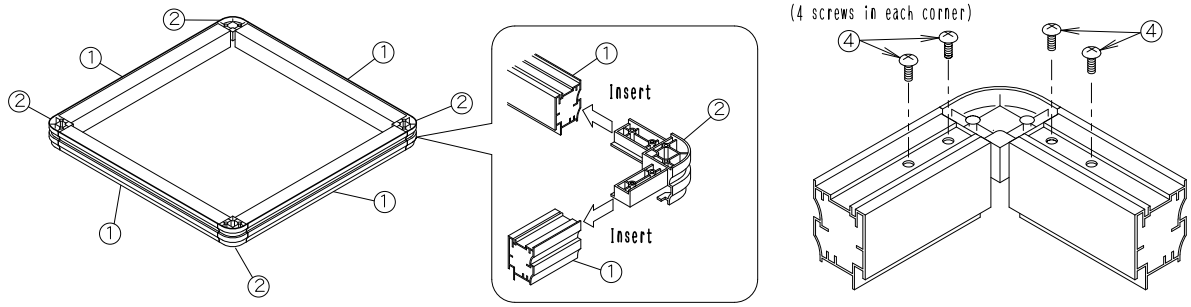


## ❹ Fixing to the Decoration panel

(1) Set the fixing metal ③ on each corner with screws ④.
(Screw positions change with decoration panels, as shown in the following figure.)

(2) Place the panel spacer assembled in item ③ Assembly of panel spacer of the above on the outer frame of the Decoration panel.

(3) Fix the panel spacer to the fixing metal ③ with screws ④ (4 portions).

● In the case of BYCP125K-W1

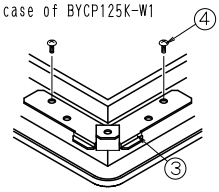

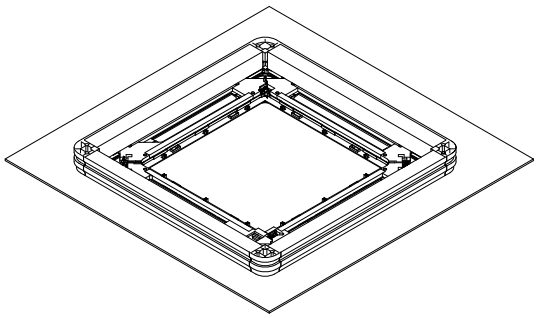

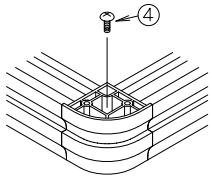

● In the cases of other than the above.

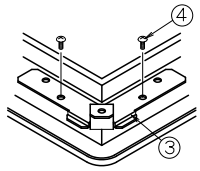

## ❺ Adhesion of the sealing material

Adhere the sealing material ⑤ ⑥ on the upper face of the panel spacer in the order of ⑤ and ⑥.

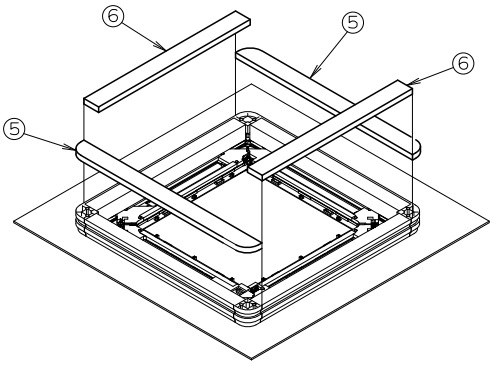

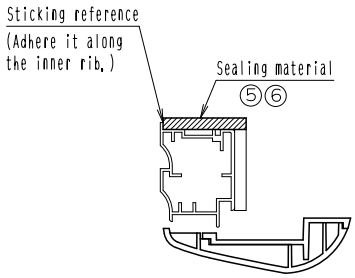


## ❻ Installation of the Decoration panel

(1) install the decoration panel to the indoor unit according to the installation manual of decoration panel.

**The panel spacer is not firmly fixed to the decoration panel, so that never hold the panel spacer directly or lean the decoration panel extremely.**

(2) After installation of the Decoration panel, adhere the caution sticker ⑦ next to the name plate of the indoor unit as shown on the right.

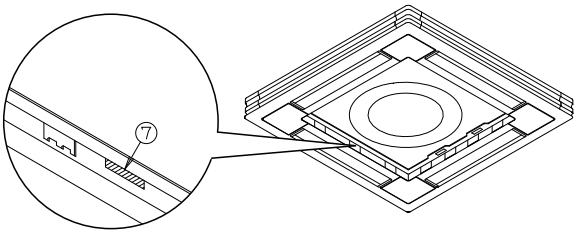

1P136564E

## 3.4 KDDP55D160 / KDDP55D160K — Fresh air intake kit (chamber type)

**KDDP55D160 (without T-shape, without Fan)**

**Dimensions** **Unit:mm**

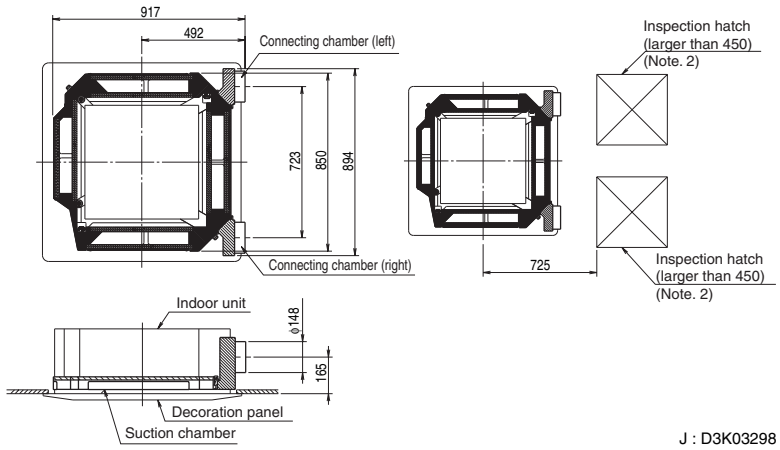


J : D3K03298

**Caution**

1. An inspection batch is required when inserting this kit (Required for maintenance of the kit.)
2. Mount one or the other of the inspection hatch.
3. This should be assembled locally.
4. If there is any obstacle to make air intake from both sides hard, air intake from one side will be enabled.
5. If the light receiver unit for the remote controller is mounted to the main unit, air should be taken in from the right side.

| Item \ Model | | KDDP55D160 |
|---|---|---|
| Fresh air intake method | | Fresh air intake by air conditioning fan. |
| Diameter of connection duct | | ϕ150 |
| Accessories | | Sealing material: 1<br>Mounting screws (M4×12) : 4, Installation manual |
| Mass (Weight) | kg | 4.2 |

| Model | Component | |
|---|---|---|
| | Suction chamber | Connecting chamber · T pipe |
| **KDDP55D160** | KDDP55D160-1 | KDDJ55B160-2 |

**KDDP55D160K (with T-shape, without Fan)**

**Dimensions** **Unit:mm**

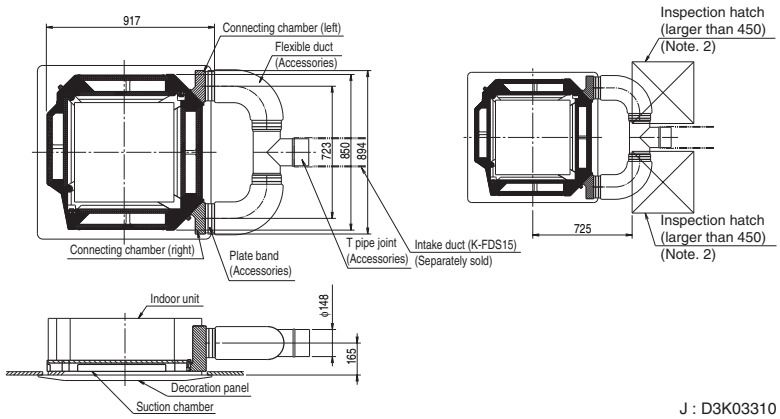


J : D3K03310

**Caution**

1. Maximum length of the duct is 4 m.
2. An inspection hatch is required when inserting this kit. (Required for maintenance of the kit.)
3. Mount one or the other of the inspection hatch.
4. This should be assembled locally. This kit is designed for intake from both sides. If one side is blocked requiring intake from only one side, use KDDP55D160.
5. This kit cannot be used when the receiver for the wireless remote control is attached as it blocks intake from one side.

| Item \ Model | | KDDP55D160K |
|---|---|---|
| Fresh air intake method | | Fresh air intake by air conditioning fan. |
| Diameter of connection duct | | ϕ150 |
| Accessories | | T pipe joint: 1, Flexible duct: 2, Plate bands: 4,<br>Mounting screws (M4×12) : 4, Installation manual |
| Mass (Weight) | kg | 6.0 |

| Model | Component | |
|---|---|---|
| | Suction chamber | Connecting chamber · T pipe |
| **KDDP55D160K** | KDDP55D160-1 | KDDJ55B160K2 |

## Installation

**⚠Caution** Before starting the installation work, carefully read the following, safety precautions and observe them to ensure safety during work.

- Make sure to use the attached or spcified components to install the prducts. Otherwise, it may cause air leak or the product may fall.
- After installation, check whether there is no abnomality during the trial operation.

**REMARKS**

- This kit can be installed to the Ceiling Mounted Cassette Type Air Conditioner<Multi-flow type>.
- Before installation, make sure the indoor unit number.
- Refer to the installation manuals for the indoor unit and the decoration panel.

**Combination table**

| Kit name | Indoor unit model that party crowded is possible | |
|---|---|---|
| KDDP55D160<br>KDD55DA160<br>KDDP55D160K<br>KDD55DA160K | SkyAir | FH(Y)C35~140KVE<br>FHC18~48NUV1<br>FHC18~48NUV2S<br>FHC21KV2S |

**Components** Check if the following parts are included with your kit.
Shaded part ▭ is separately packed.

| Name | | ①Suction Chamber | ②Connecting Chamber (Right) | ③Connecting Chamber (Left) | ④Screw | ⑤Closing Material | ⑥T Joint | ⑦Flexible Duct | ⑧Clamp | ⑨Installation Manual |
|---|---|---|---|---|---|---|---|---|---|---|
| Shape | | | | | M4×12 | | | | | |
| Q'ty | KDDP55D160<br>KDD55DA160 | 1 PC. | 1 PC. | 1 PC. | 4PCS. | 1 PC. | — | — | — | 1 PC. |
| | KDDP55D160K<br>KDD55DA160K | 1 PC. | 1 PC. | 1 PC. | 4PCS. | — | 1 PC. | 2PCS. | 4PCS. | 1 PC. |

### ❶ Selection of Location and Access Door

1. Referto the following table.

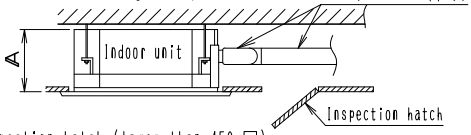


2. Inspection hatch (lager than 450 □)

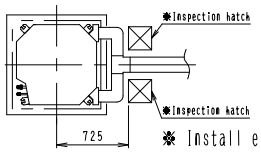


| Indoor unit | A |
|---|---|
| FH(Y)C35~71KVE<br>FHC18~26NUV1<br>FHC18NUV2S<br>FHC21KV2S | 290 |
| FH(Y)C100~140KVE<br>FHC30~48NUV1<br>FHC24~48NUV2S | 348 |

※ Install either one of hatches

**In case of KDDP55D160**

- When the intake from both sides can not be obtained due to an obstacle, one side intake is acceptable. In this case, make sure to close the opening with the closing material⑤.
- In case of one side intake, the noise will be larger than intake from both sides.

〔Example of one side intake〕

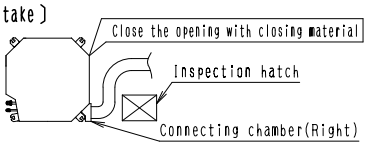


※When installing the wireless receiver kit on the indoor unit, the duct must be led from right side as shwn. In this case, use KDDP55D160 or KDD55DA160.

### ❷ Installation of the Suction chamber

1. Remove the decoration panel. (This is not required for the new installtion)
   - Remove the decoration panel in the reverse step when the panel is installed. (Refer to the installation manual of the decoration panel for the details.)
2. Temporarily install the suction chamber to the indoor unit by hanging the lutch on the opposite side of the suction chamber to the hook of the indoor unit body. (2 portions)
   Temporarily hang the remaining 2 hooks of the suction chamber to the hooks on the sides of the indoor unit. (fig.1) ~ (fig.3)
   (When the indoor unit is already installed, hang the hook to the suspennsion bracket temporarily and fix the hook.)
   ※Installation set outline of the indoor unit (fig.2)
3. Tighten 2hexahead screws located beneath the lutches until the thickness of the sealing material of chamber reduces to 5~8mm. (fig.4) (fig.5)

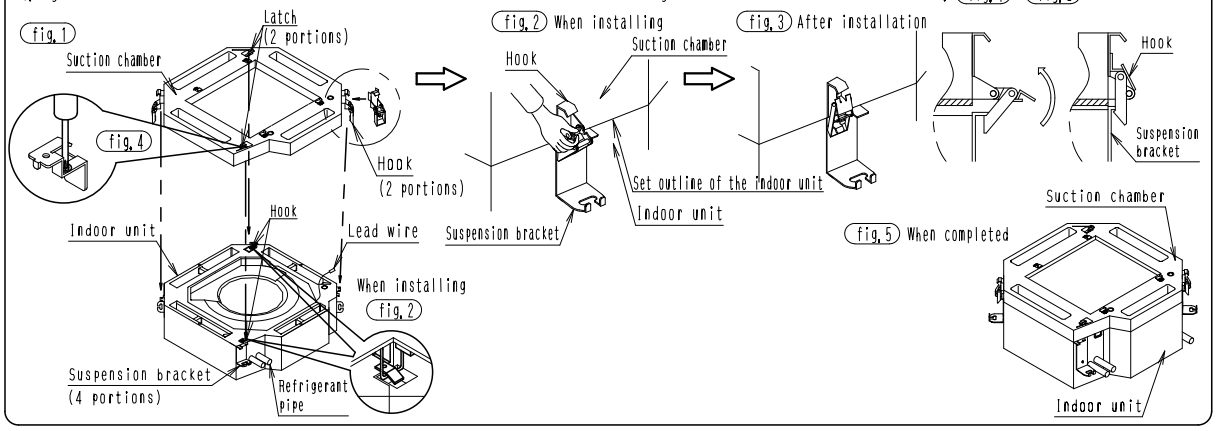


C : 3K011144A

## ❸ Installation of the Indoor Unit and the Suction Chamber

- Install the indoor unit and the suction chamber.
  Refer to the installation manual of the indoor unit.
  (For the height of the unit, refer to the drawing on the right.)
- Be complete installated refrigerant piping, and drain piping.
- Attach the paper pattern for installation to the indoor unit with screws to protect the indoor unit from dirt. [See below]
  (When the indoor unit is newly installed)
  (See below)
- In case of attaching the chamber after installed indoor unit.
  For the height of the unit, change the height shown on the right drawing.

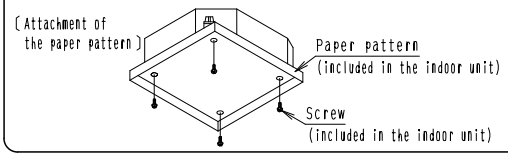


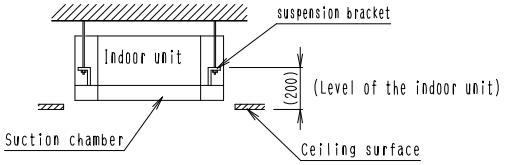


## ❹ Installation of Connecting duct

1. Install the Connecting chamber(right & left)in accordance with the procedure shown in fig.5.

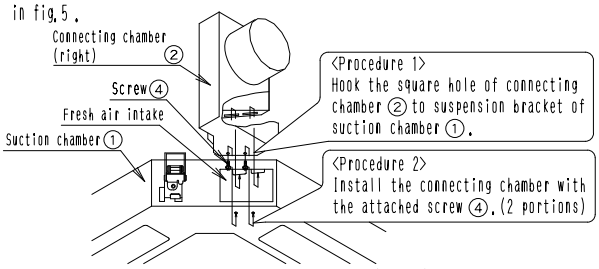


fig.5 Installation of the connecting chamber(right)
(Same as the left side)

**<How to tighten the clamp>**

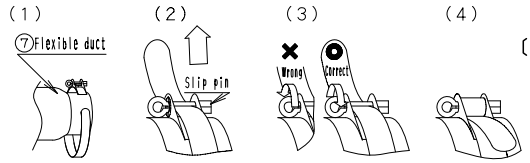


(1)Wrap the clamp around the duct.
(2)Install the edge of clamp between the sit of pin. Tighten the clamp by hand.
(3)Make sure the tightening direction and tighten the clamp with standard tools (ex. Screwdriver or pliers) as shown.
(4)Completed.

**Caution**
Do not turn the slit pin reversely.
If turned reversely, ratchet part many break down.

**In case of KDDP55D160K**

2. Connect the T Joint and Connecting chamber. (fig.6)

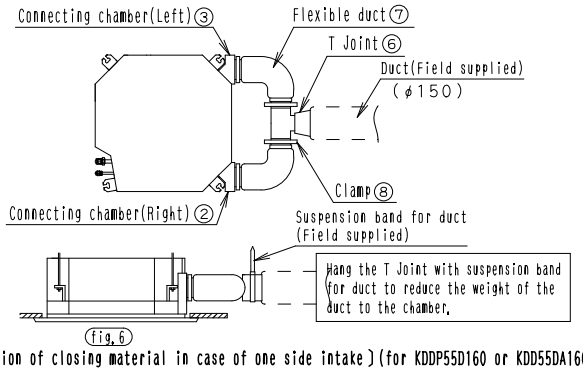


fig.6

**〔Installation of closing material in case of one side intake〕(for KDDP55D160 or KDD55DA160)**

- Install the closing material in accordance with the following procedures. (fig.7)
  Closing material can be used either right or left side opening.

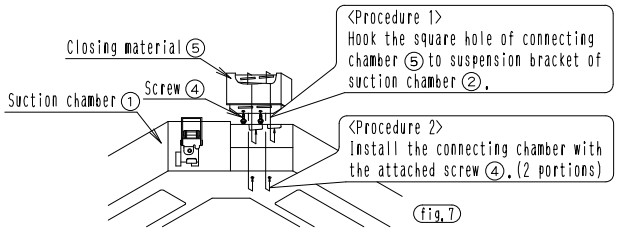


fig.7

## ❺ Duct connection 《Duct:diameter φ150》

1)Attach the duct to the outside of the Branch duct chamber.
- Wrap the duct tape(Field supplied)around the connection to prenent air leak.
- Insulate the duct to prevent condensate.

2)Do not perform the following duct work.

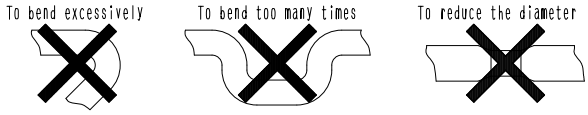


**Caution**
- follow the local code or regulation to install the duct.
- In case that metal duct is penetrated through wooden wall, make sure the duct and the wall are electrically insulated.
- Install the outdoor unit duct inclined downwardly so that the rain will not get into the duct. (Inclination 1/100 to 1/50)
- Where it contact the outside air, make sure to install screen to avoid birds, small animals or insects getting inside the duct.
- Where it contact the outside air, make sure to install air filter to protect heat exchanger for indoor unit.

## ❻ Installation of Decoration panel

- Install the Decoration panel in accordance with the installation manual attached to the decoration panel.

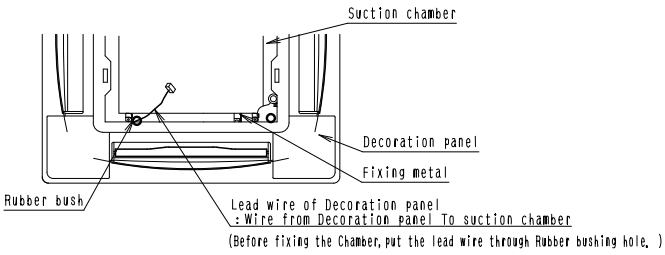


**In case of the panel for Wireless remote controller**

- Put the Connector for receiver lead wire through rubber bush and connect to the indoor PC board.
- Refer to the installation manual attached to the Wireless remote controller kit(optional)for the detail.

3K011144A

3

• **KDDP55D160 (without T joint, without fan)**

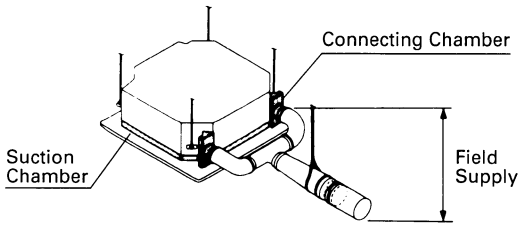


**Note:**
1. As the principle, the duct fan is unnecessary for 4 meters or less. When needing enough fresh air taking-in, use Kit with Duct Fan of optional, which is shown in the following.
2. The other part of Fresh air intake kit (Duct, T Joint, Air Filter, Hood, etc) is field supplied.
3. In wireless remote controller use, Flexible Duct in the right can not connect.

• **Specifications**

| Kit Name / Item | KDDP55D160 |
|---|---|
| Method of Fresh Air Intake | Fresh Air Intake by The Indoor Unit Fan |
| Size of Connecting Duct | ϕ150 |
| Applicable Models | FH(Y)C35~140KVE, FHC18~48NUV1 FHC18~48NUV2S, FHC21KV2S |

• **Example of Installation**

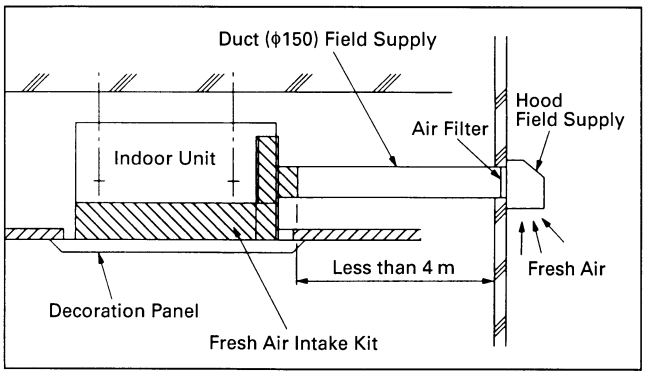


• **KDDP55D160K (with T joint, without fan)**

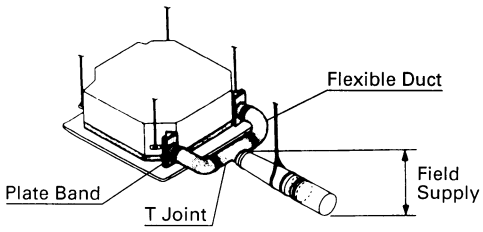


**Note:**
1. As the principle, the duct fan is unnecessary for 4 meters or less. When needing enough fresh air taking-in, use Kit with Duct Fan of optional, which is shown in the following.
2. The other part of Fresh air intake kit (Duct, T Joint, Air Filter, Hood, etc) is field supplied.
3. It isn't possible to do simultaneous use with wireless remote controller.

• **Specifications**

| Kit Name / Item | KDDP55D160K |
|---|---|
| Method of Fresh Air Intake | Fresh Air Intake by The Indoor Unit Fan |
| Size of Connecting Duct | ϕ150 |
| Applicable Models | FH(Y)C35~140KVE, FHC18~48NUV1 FHC18~48NUV2S, FHC21KV2S |

• **Example of Installation**

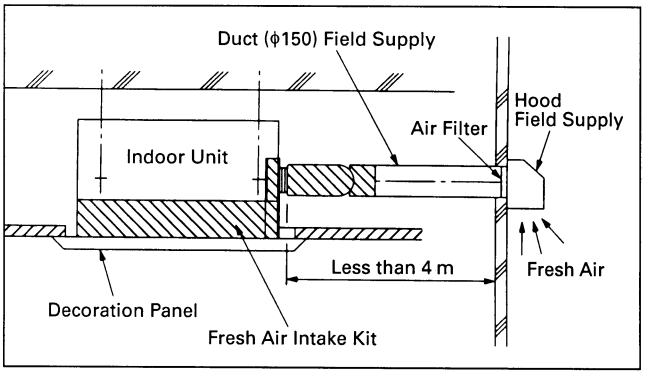


(B0418)

## 3.5 KDDJ55X160 — Fresh air intake kit (direct installation type)

**KDDJ55X160**

| Item \ Model | KDDJ55X160 |
|---|---|
| Material | Hot-dip zinc-coated carbon steel sheet |
| Diameter of connection duct | ϕ75 |
| Accessories | Mounting screws : 4<br>Insulation material : 1 set<br>Installation manual |

**Dimensions** **Unit:mm**

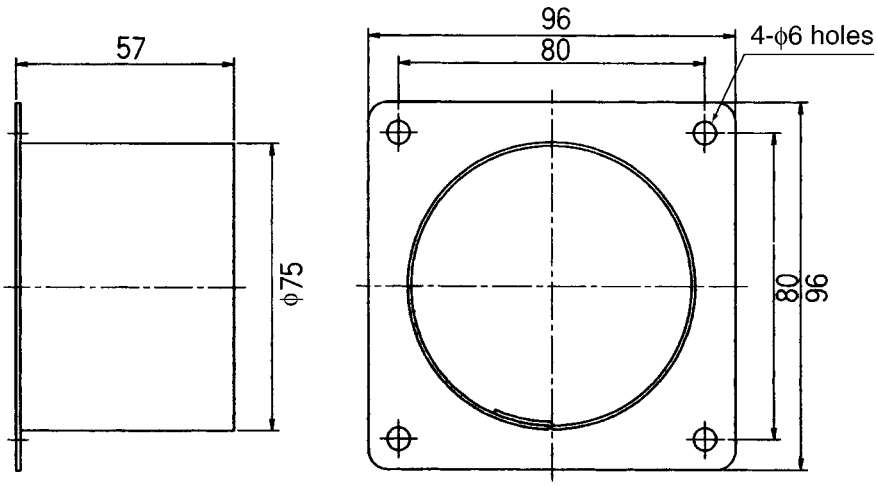


J : D3K2175

## Installation

# Daikin Air Conditioners Fresh Air Intake Kit (Duct Flange) Installation manual

KDDJ55X160
KDDJ55XA160

**Caution: Before installation, read this safety instruction.**

Remarks:

1. This kit can be installed to the Ceiling mounted cassette type (Multi-flow).
2. When installing this kit, duct (Nominal dia. : φ75) is required on site.

- In case that metal duct is penetrated through wooden walls, make sure the duct and the wall electrically insulated.
- Install the duct inclined downwardly to outdoor so that the rain may not get into the duct. (Inclination 1/100 to 1/50)
- To avoid birds, small animals or insects getting inside the duct, make sure to install net where it contacts the outside air.

Contents

Prior to installation, make sure you have the complete kit of parts.

| Name | ① Duct Flange | ② Screws | ③ Insulation for Duct Flange | ④ Insulation for Opening of Unit | ⑤ Installation Manual |
|---|---|---|---|---|---|
| Q'ty | 1 piece | 4 pieces | 1 piece | 1 piece | 1 piece |
| Shape | | M4×12 | | | |

Necessary tools

Philips head screw driver, nipper, cutter etc.

## 1 Installation procedures of Duct flange

The method of installation varies with indoor unit type.
The unit type can be distinguished by the position of knockout hole.

1. Cut off the knockout hole on the side plate. (Fig. 1)

| Unit type 1 | Unit type 2 |
|---|---|
| The knockout hole is opposite to drain pipe. | The knockout hole is opposite to ref. pipe. |

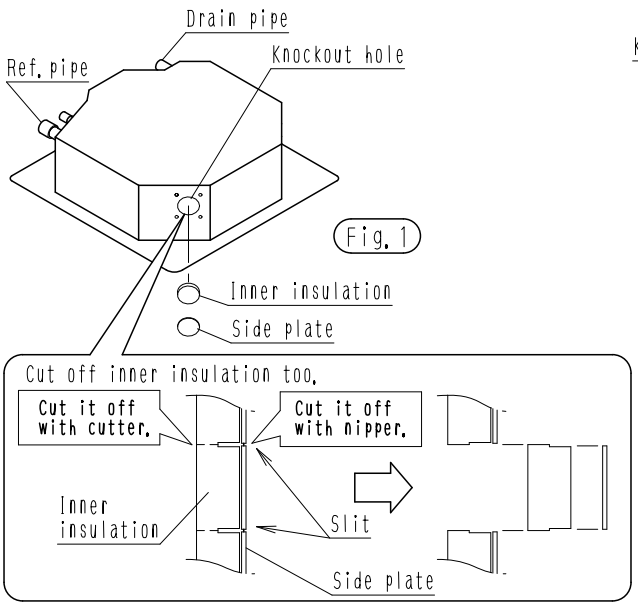


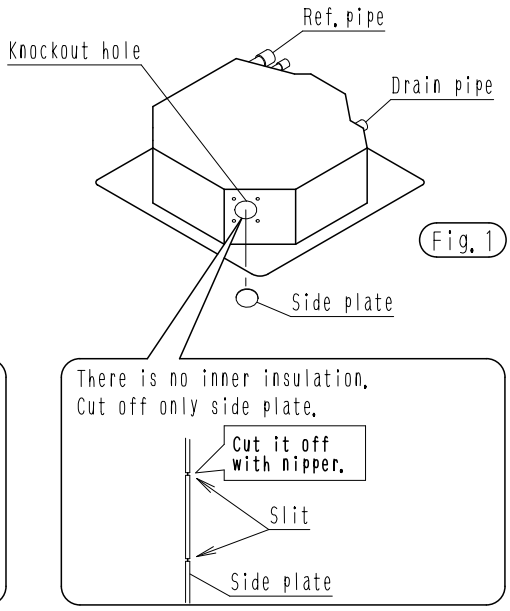


2P066796C

2. Adhere the insulation④ for opening of unit to the opening. (Fig. 2)

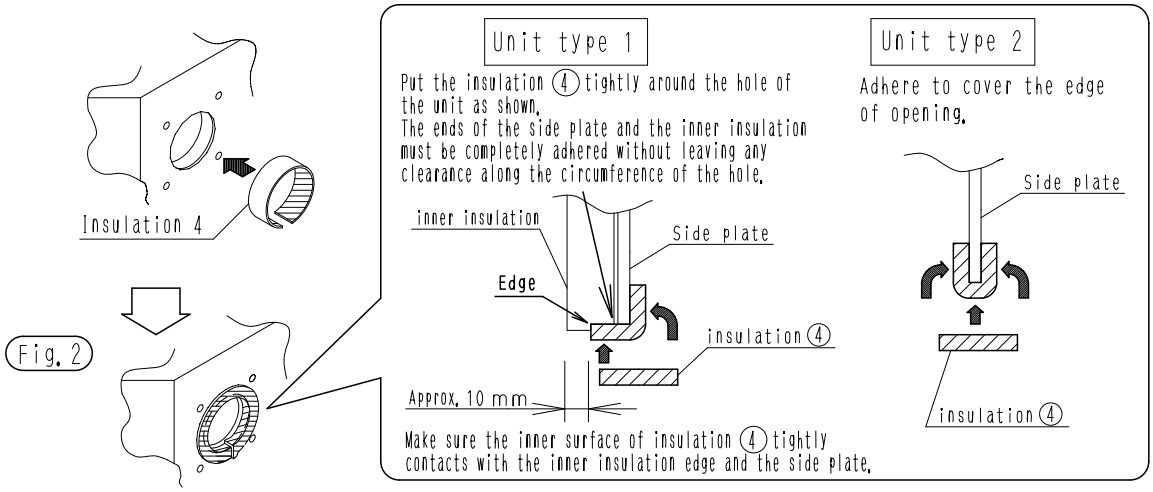


3. Install the duct flange①with screws②(M4×12, 4 screws)to the opening and adhere the insulation③(Fig. 3)

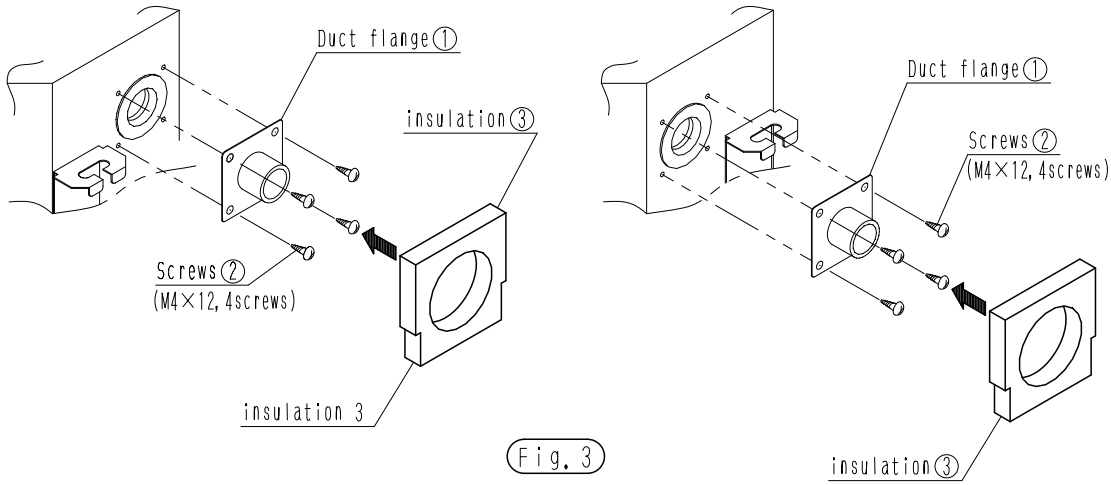


Fig. 3

## ❷ Installation procedures of Duct <Nominal diameter of duct: φ75>

1. Connect the duct to the duct flange. (Flange fits inside the duct.>(Fig. 4)
2. After connection, wrap vinyl tape (field supply)around the duct connection to prevent air leak.

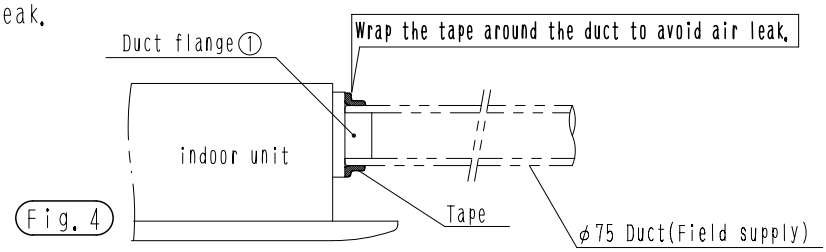


Fig. 4

**Precaution**

- ALL ducts must be completely insulated.
- Do not do the followings when installing duct.

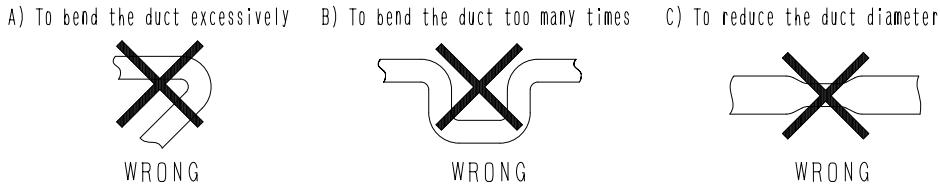


2P066796C

## 3.6 KAFP556D80 / KAFP556D160, KAFP557D80 / KAFP557D160 — High efficiency filter (including chamber)

**KAFP556D80**

**Caution**

- Field setting by remote controller is necessary when the high efficiency filter is installed.

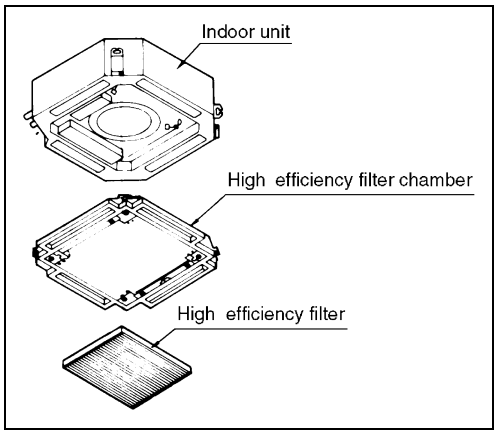


**Dimensions** **Unit:mm**

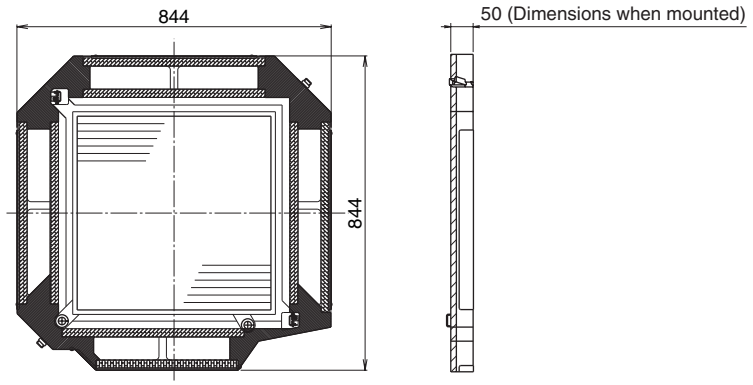


J : D3K03295

| Item \ Model | | KAFP556D80 | KAFP556D160 | KAFP557D80 | KAFP557D160 |
|---|---|---|---|---|---|
| Material | | Galvanized sheet iron, foam polystyrene | | | |
| Initial pressure loss | Pa | 34 or less | | | |
| Final pressure loss | Pa | 98 or less | | | |
| Average efficiency | % | 65 (colorimetric method) | | 90 (colorimetric method) | |
| Air flow rate | $m^3$/min | 19 | 35 | 19 | 35 |
| | l/sec | 317 | 583 | 317 | 583 |
| Life | h | 2,500 (dust concentration 0.15 mg/$m^3$) | | 1,800 (dust concentration 0.15 mg/$m^3$) | |
| Filter element | | Non-woven fabric of synthetic fiber | | | |
| Number of sheets included | | 1 | 1 | 1 | 1 |
| Accessories | | Installation manual | | | |
| Mass (Weight) | kg | 3.6 | 4.2 | 3.6 | 4.2 |

| Replacement filter (optional accessories) | KAFP552H80 | KAFP552H160 | KAFP553H80 | KAFP553H160 |
|---|---|---|---|---|

3

## Installation

# Daikin Air Conditioners High Effciency Filter Unit Installation manual

KAFP556D80 • KAFP556D160 • KAF556DA80 • KAF556DA160
KAFP557D80 • KAFP557D160 • KAF557DA80 • KAF557DA160

Caution : Before installation, read this safety instruction.

**⚠Caution** Before starting the installation work, carefully read the following, safety precautions and observe them to ensure safety during work.

- Make sure to use the attached or spcified components to install the prducts. Otherwise, it may cause air leak or the product may fall.
- After installation, check whether there is no abnomality during the trial operation.

**REMARKS**

- This kit can be installed to the Ceiling Mounted Cassette Type Air Conditioner<Multi-flow type>.
- Before installation, make sure the indoor unit model name.
- Refer to the installation manuals for the indoor unit and the decoration panel.

**Components** Check if following parts are included with your kit.

| Name | High Effciency Filter Unit | Installation manual |
|---|---|---|
| Shape | 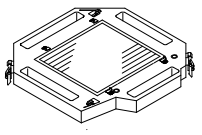 | 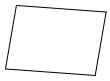 |
| Quantity | 1 PC. | 1 PC. |

**Combination table**

| Kit name | | Indoor unit model that party crowed is possible | |
|---|---|---|---|
| KAFP556D80 KAF556DA80 or KAFP557D80 KAF557DA80 | SPLIT | FHYCP50 • 60 • 71DVE<br>FHYCP71DVL<br>FH(Y)C35-71KVE | FHC18-26NUV1<br>FHC18NUV2S<br>FHC21KV2S |
| | VRV | FXF25 • 32 • 40 • 50 • 63 • 80LVE<br>FXF25 • 32 • 40 • 50 • 63 • 80LVEC<br>FXFQ25 • 32 • 40 • 50 • 63 • 80MVE | |
| KAFP556D160 KAF556DA160 or KAFP557D160 KAF557DA160 | SPLIT | FHYCP100 • 125DVE<br>FHYCP100 • 125 • 140DVL<br>FH(Y)C100-140KVE | FHC30-48NUV1<br>FHC24-48NUV2S |
| | VRV | FXF100 • 125LVE<br>FXF100 • 125LVEC<br>FXFQ100 • 125MVE | |

## ❶ Preparation of indoor unit

- When you instell the High Effciency filter, the setting by the remote controller is required. Set the remote controller at the field setting mode and change the setting position number as shown on the table. Refer to the operation manual of remote controller for the field setting.

| Mode No. | Setting switch No. | Setting position No. | Remarks |
|---|---|---|---|
| 13 or 23 | 0 | 02 | Only 80 |
| | 1 | 02 | Both 80 and 160 |

## ❷ Installation of the High Effciency filetr unit

1. Remove the decoration panel. (This is not required for the new installtion)
   - Remove the decoration panel in the reverse step when the panel is installed. (Refer to the installation manual of the decoration panel for the details.)
2. REmove the High Effciency filter. (fig. 1)
3. Temporarily install the filter chamber to the indoor unit by hanging the lutch on the opposite side of the filter chamber to the hook of the indoor unit body. (2 portions)
   Temporarily hang the remaining 2 hooks of the filter chamber to the hooks on the sides of the indoor unit. (fig. 2) ~ (fig. 4)
   (When the indoor unit is already installed, hang the hook to the suspennsion bracket temporarily and fix the hook.)
   ❋Installation set outline of the indoor unit (fig. 3)
4. Tighten 2hexahead screws located beneath the lutches until the thickness of the sealing material (fig. 5) (fig. 6) of chamber reduces to 5~8mm.

(fig. 1)

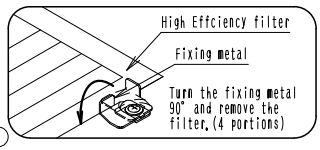


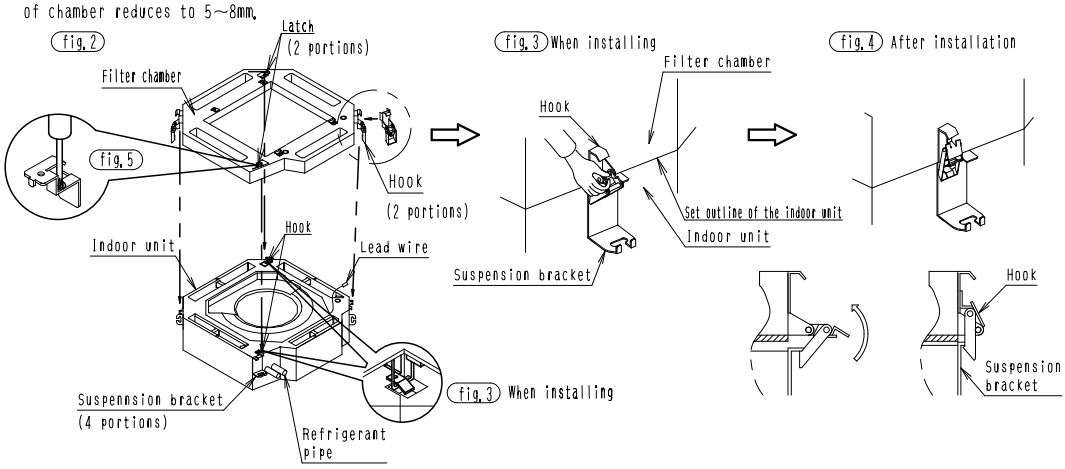


C : 3K011145B

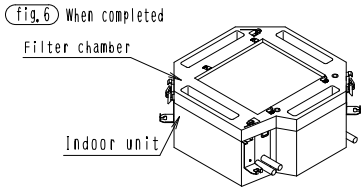


## ❸ Installation of the indoor unit and the High Effciency filter unit

- Install the indoor unit and the High Effciency filter unit.
  Refer to the installation manual of the indoor unit.
  (For the height of the unit, refer to the drawing on the right.)
- Be complete installated refrigerant piping, and drain piping.
- Attach the paper pattern for installation to the indoor unit with screws to protect the indoor unit from dirt. [See below]
  (When the indoor unit is newly installed)
  (See below)
- In case of attaching the chamber after installed indoor unit.
  For the height of the unit, change the height shown on the right drawing.

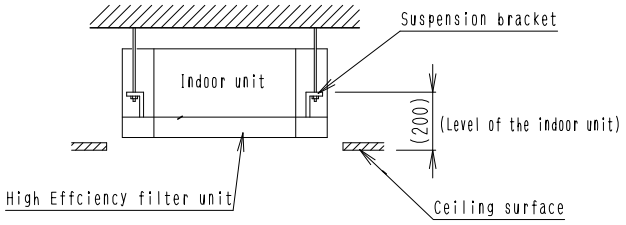


〔Attachment of the paper pattern〕

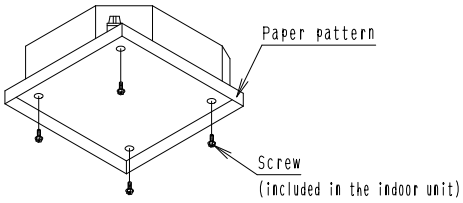


## ❹ Installation of the Decoration panel and the High Effciency filter

- Install the Decoration panel in accordance with the installation manual attached to the decoration panel.

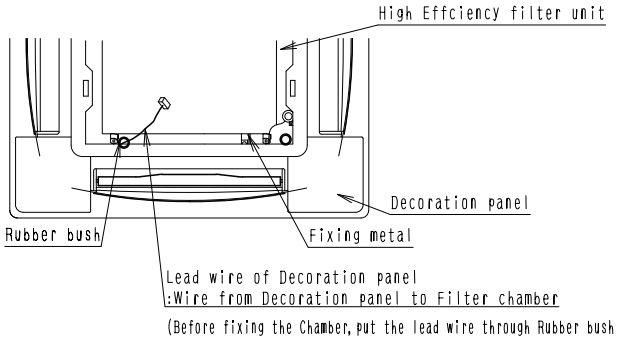


- Installation of the High Effciency filter
  After connecting, install the Filter chamber. (fig. 7)

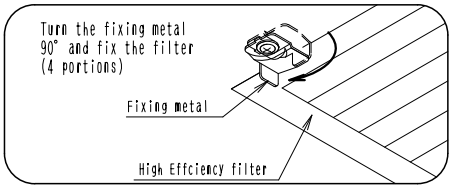


(In case of the panel for Wireless remote controller)

- Put the Connector for receiver lead wire through rubber bush and connect to the indoor PC board.
- Refer to the installation manual attached to the Wireless remote controller kit(optional)for the detail.

3K011145B

## 3.7 KAFP552H80 / KAFP552H160, KAFP553H80 / KAFP553H160 — Replacement high efficiency filter

**Dimensions** **Unit:mm**

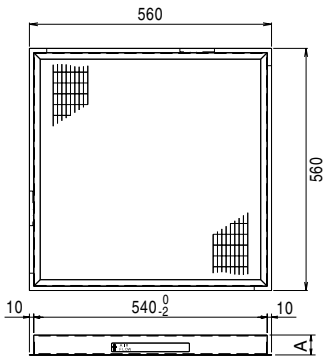


| Model | A |
|---|---|
| KAFP552H80 · KAFP553H80 | 25 |
| KAFP552H160 · KAFP553H160 | 45 |

D3K04256A

**Caution**

- Cannot be water-washed for reuse.
- The filter chamber (KDDFP55D160) is required when the high efficiency filter will be installed.

| Item \ Model | | KAFP552H80 | KAFP552H160 | KAFP553H80 | KAFP553H160 |
|---|---|---|---|---|---|
| Initial pressure loss | Pa | 34 or less | | | |
| Final pressure loss | Pa | 98 or less | | | |
| Average efficiency | % | 65 (colorimetric method) | | 90 (colorimetric method) | |
| Air flow rate | $m^3$/min | 19 | 35 | 19 | 35 |
| | l/sec | 317 | 583 | 317 | 583 |
| Life | h | 2,500 (dust concentration 0.15 mg/$m^3$) | | 1,800 (dust concentration 0.15 mg/$m^3$) | |
| Filter element | | Non-woven fabric of synthetic fiber | | | |
| Number of sheets included | | 1 | 1 | 1 | 1 |
| Mass (Weight) | kg | 0.6 | 1.2 | 0.6 | 1.2 |

## 3.8 KDDFP55D160 — High efficiency filter chamber

**KDDFP55D160**

**Dimensions** **Unit:mm**

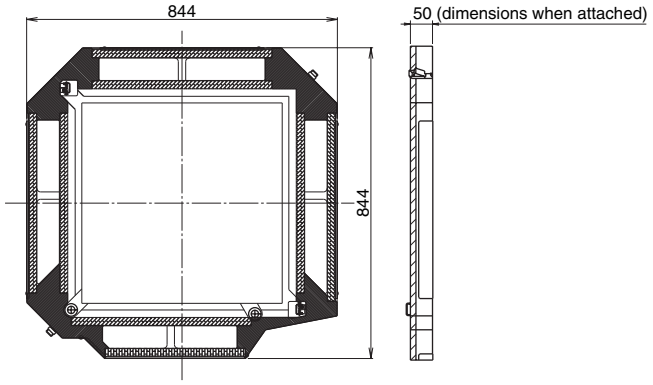


J : D3K03293

| Item | | | Model KDDFP55D160 |
|---|---|---|---|
| Inserted filter | High efficiency filter | 65% (colorimetric method) | KAFP552H80 KAFP552H160 |
| | | 90% (colorimetric method) | KAFP553H80 KAFP553H160 |
| | Ultra long life filter | | KAFJ55K160H |
| Material | | | Galvanized sheet iron, foam polystyrene |
| Accessories | | | Installation manual |
| Mass (Weight) | | kg | 3.0 |

3

## Installation

# Daikin Air Conditioners Filter Chamber Installation manual

KDDFP55D160 • KDDF55DA160 Caution : Before installation, read this safety instruction.

**⚠Caution** Before starting the installation work, carefully read the following, safety precautions and observe them to ensure safety during work.

- Make sure to use the attached or specified components to install the products. Otherwise, it may cause air leak or the product may fall.
- After installation, check whether there is no abnomality during the trial operation.

**REMARKS**

- This kit can be installed to the Ceiling Mounted Cassette Type Air Conditioner<Multi-flow type>.
- Before installation, make sure the indoor unit model name.
- Refer to the installation manuals for the indoor unit and the decoration panel.

**Notes** (In case of useing the Ultra-long life filter)

Ultra-long life filter can be reused by cleaning.
After installtion, instruct filter cleaning periad and removeing to customers.

**Components** Check if following parts are included with your kit.

| Name | Filter Chamber | Installation manual |
|---|---|---|
| Shape | 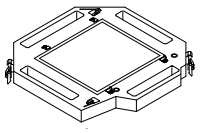 | 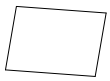 |
| Quantity | 1 PC. | 1 PC. |

**Combination table**

| Kit name | High Effciency filter | Ultra-long life filter | Indoor unit model that party crowed is possible | | |
|---|---|---|---|---|---|
| KDDFP 55D160 KDDF 55DA160 | KAFP552H80 KAF552HA80 or KAFP553H80 KAF553HA80 | KAFJ55K160H KAF55KA160H | SPLIT | FHYCP50 • 60 • 71DVE FHYCP71DVL FH(Y)C35~71KVE | FHC18~26NUV1 FHC18NUV2S FHC21KV2S |
| | | | VRV | FXF25 • 32 • 40 • 50 • 63 • 80LVE FXF25 • 32 • 40 • 50 • 63 • 80LVEC FXFQ25 • 32 • 40 • 50 • 63 • 80MVE | |
| | KAFP552H160 KAF552HA160 or KAFP553H160 KAF553HA160 | | SPLIT | FHYCP100 • 125DVE FHYCP100 • 125 • 140DVL FH(Y)C100~140KVE | FHC30~48NUV1 FHC24~48NUV2S |
| | | | VRV | FXF100 • 125LVE FXF100 • 125LVEC FXFQ100 • 125MVE | |

## ❶ Preparation of indoor unit

- When you instell the Ultra-long life filter, the setting by the remote controller is required. Set the remote controller at the field setting mode and change the setting position number as shown on the table. Refer to the operation manual of remote controller for the field setting.

| Filter name | | Mode No. | Setting switch No. | Setting position No. | | Contents of setting |
|---|---|---|---|---|---|---|
| High Effciency filter | Only 80 | 13 or 23 | 0 | 02 | | ——— |
| | Both 80 and 160 | | 1 | 02 | | |
| Ultra-long life filter | | 10 or 20 | 0 | Less dusty place | 01 | Filter cleaning period :Every 10,000 hrs |
| | | | | Dusty place | 02 | Filter cleaning period :Every 5,000 hrs |
| | | | 1 | 02 | | Filter sign display:Ultra-long life filter |

## ❷ Installation of Filter chamber

1. Remove the decoration panel. (This is not required for the new installtion)
   - Remove the decoration panel in the reverse step when the panel is installed. (Refer to the installation manual of the decoration panel for the details.)
2. Temporarily install the filter chamber to the indoor unit by hanging the lutch on the opposite side of the filter chamber to the hook of the indoor unit body. (2 portions) Temporarily hang the remaining 2 hooks of the filter chamber to the hooks on the sides of the indoor unit. (fig. 1) ~ (fig. 3)
   (When the indoor unit is already installed, hang the hook to the suspennsion bracket temporarily and fix the hook.)
   ※Installation set outline of the indoor unit (fig. 2)
3. Tighten 2hexahead screws located beneath the lutches until the thickness of the sealing material (fig. 4) (fig. 5) of chamber reduces to 5～8mm.

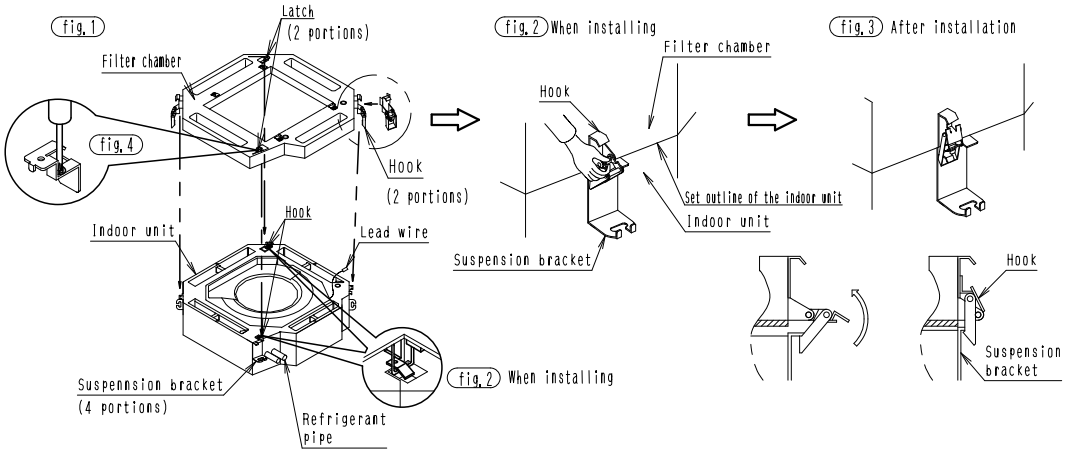


C : 3K011148B

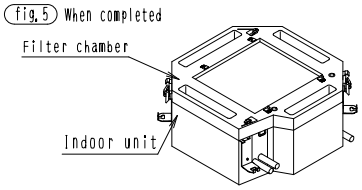


## ❸ Installation of the indoor unit and the Filter chamber

- Install the indoor unit and the filter chamber.
  Refer to the installation manual of the indoor unit.
  (For the height of the unit, refer to the drawing on the right.)
- Be complete installated refrigerant piping, and drain piping.
- Attach the paper pattern for installation to the indoor unit with screws to protect the indoor unit from dirt. [See below]
  (When the indoor unit is newly installed)
  (See below)
- In case of attaching the chamber after installed indoor unit.
  For the height of the unit, change the height shown on the right drawing.

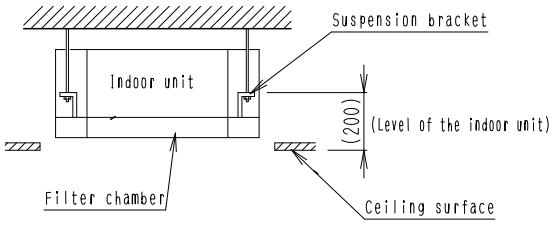


(Attachment of the paper pattern)

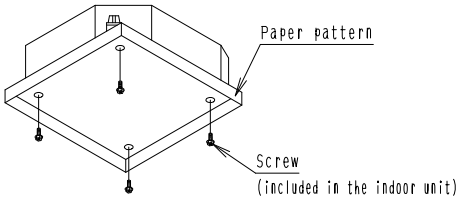


## ❹ Installation of Decoration panel and the Filter

- Install the Decoration panel in accordance with the installation manual attached to the decoration panel.

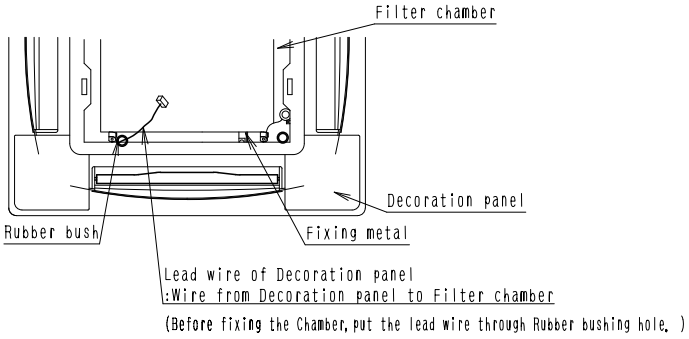


- Installation of Filter
  After connecting, install the Filter chamber. (fig. 6)

(fig. 6)

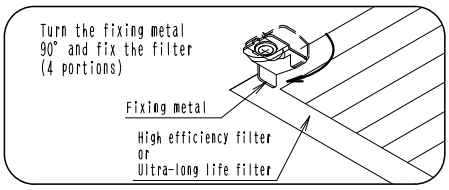


(In case of the panel for Wireless remote controller)

- Put the Connector for receiver lead wire through rubber bush and connect to the indoor PC board.
- Refer to the installation manual attached to the Wireless remote controller kit(optional)for the detail.

3K011148B

## 3.9 KAFJ551K160 — Replacement long life filter

**KAFJ551K160**

| Item / Model | | KAFJ551C160 | KAFJ551K160 |
|---|---|---|---|
| Initial pressure loss | Pa | 4.9 or less | 8 or less |
| Final pressure loss | Pa | 49 or less | |
| Average efficiency | % | 65 (gravity method) | |
| Air flow rate | $m^3$/min | 18 | 17.5 |
| Life | h | 5,000 (dust concentration 0.15 mg/$m^3$) | 2,500 (dust concentration 0.15 mg/$m^3$) |
| Filter element | | Mildew-proof resin net | |
| Number of sheets included | | 1 | |
| Mass (Weight) | kg | 0.4 | 0.3 |

**Caution**

- Has the same specifications as the standard equipment.
- Can be water-washed. Can be reused.

**Dimensions** **Unit:mm**

**KAFJ551C160**

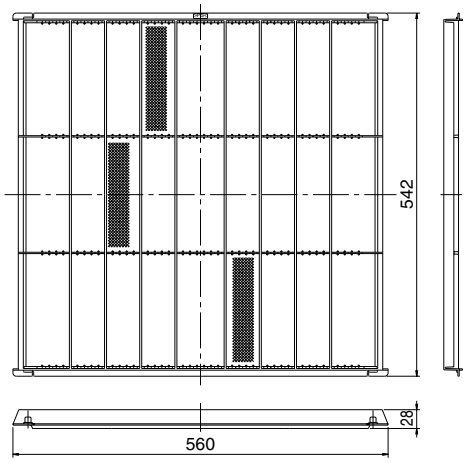


D3K3092

**KAFJ551K160**

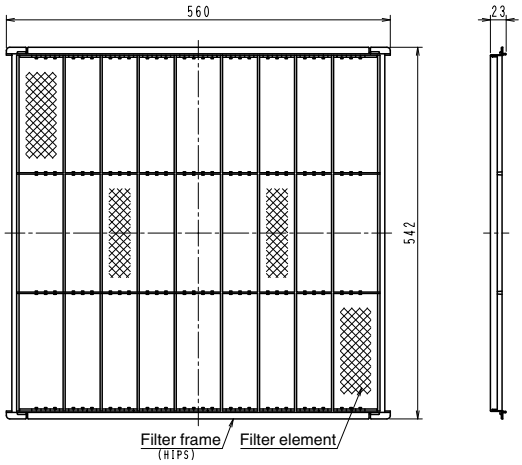


J : D3K2170C

## 3.10 KAFP55D160 — Ultra long life filter unit (including chamber)

**KAFP55D160**

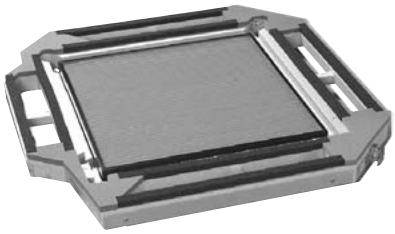

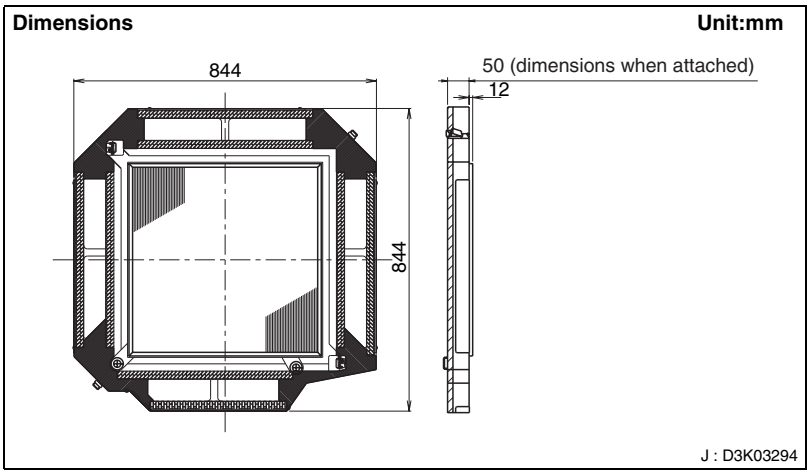


**Caution**

- In order to mount a ultra long life filter unit, setting of the main unit of indoor unit should be made.
- Individual filter (KAFJ55K160H) is available as an optional accessory.

| Mounting locations | Filter cleaning period |
|---|---|
| Locations with much dust | Approximately every 5,000 hours |
| Locations with little dust (e.g. offices) | Approximately every 5,000 hours |

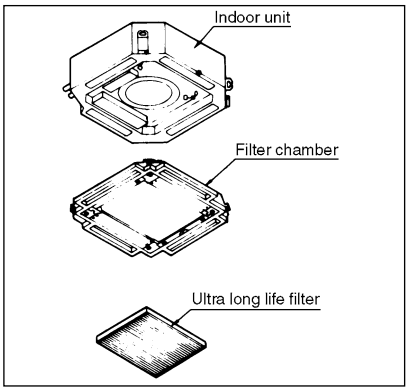


| Item \ Model | | KAFP55D160 |
|---|---|---|
| Material | | Galvanized steel iron, foam polystyrene |
| Initial pressure loss | Pa | 8 or less |
| Final pressure loss | Pa | 49 or less |
| Average efficiency | % | 50 (gravity method) |
| Air flow rate | $m^3$/min | 29.5 |
| | l/sec | 492 |
| Life | h | 5,000 (dust concentration 0.3 mg/$m^3$) |
| Filter element | | Polypropylene honeycomb (with mould-proof) |
| Number of sheets included | | 1 |
| Accessories | | Installation manual |
| Mass (Weight) | kg | 4.7 |

3

## Installation

# Daikin Air Conditioners Ultra-long Life Filter Unit Installation manual

KAFP55D160 • KAF55DA160 Caution : Before installation, read this safety instruction.

**⚠Caution** Before starting the installation work, carefully read the following, safety precautions and observe them to ensure safety during work.

- Make sure to use the attached or specified components to install the products. Otherwise, it may cause air leak or the product may fall.
- After installation, check whether there is no abnomality during the trial operation.

**REMARKS**

- This kit can be installed to the Ceiling Mounted Cassette Type Air Conditioner<Multi-flow type>.
- Before installation, make sure the indoor unit model name.
- Refer to the installation manuals for the indoor unit and the decoration panel.

**Notes**

Ultra-long life filter can be reused by cleaning.
After installtion, instruct filter cleaning periad and removeing to customers.

**Combination table**

| Kit name | Indoor unit model that party crowded is possible | | |
|---|---|---|---|
| KAFP55D160<br>KAF55DA160 | SPLIT | FHYCP50·60·71·100·125DVE<br>FHYCP71·100·125·140DVL<br>FH(Y)C35-140KVE | FHC18-48NUV1<br>FHC18-48NUV2S<br>FHC21KV2S |
| | VRV | FXF25·32·40·50·63·80·100·125LVE<br>FXF25·32·40·50·63·80·100·125LVEC<br>FXFQ25·32·40·50·63·80·100·125MVE | |

**Components** Check if following parts are included with your kit.

| Name | Ultra-long Life Filter Unit | Installation manual |
|---|---|---|
| Shape | 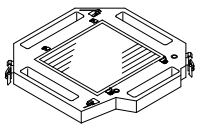 | 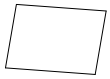 |
| Quantity | 1 PC. | 1 PC. |

## ❶ Preparation of indoor unit

- When you instell the Ultra-long life filter, the setting by the remote controller is required. Set the remote controller at the field setting mode and change the setting position number as shown on the table. Refer to the operation manual of remote controller for the field setting.

| Mode No. | Setting switch No. | Setting position No. | | Contents of setting |
|---|---|---|---|---|
| 10 or 20 | 0 | Less dusty place | 01 | Filter cleaning period :Every 10,000 hrs |
| | | Dusty place | 02 | Filter cleaning period :Every 5,000 hrs |
| | 1 | 02 | | Filter sign display:Ultra-long life filter |

## ❷ Installation of Ultra-long life filter Unit

1. Remove the decoration panel. (This is not required for the new installtion)
   - Remove the decoration panel in the reverse step when the panel is installed. (Refer to the installation manual of the decoration panel for the details.)
2. REmove the Ultra-long life filter. (fig.1)
3. Temporarily install the filter chamber to the indoor unit by hanging the lutch on the opposite side of the filter chamber to the hook of the indoor unit body. (2 portions)
   Temporarily hang the remaining 2 hooks of the filter chamber to the hooks on the sides of the indoor unit. (fig.2) ~ (fig.4)
   (When the indoor unit is already installed, hang the hook to the suspennsion bracket temporarily and fix the hook.)
   ※Installation set outline of the indoor unit (fig.3)
4. Tighten 2hexahead screws located beneath the lutches until the thickness of the sealing material (fig.5) (fig.6) of chamber reduces to 5~8mm.

(fig.1)

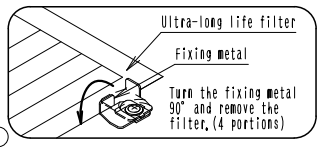


(fig.2)

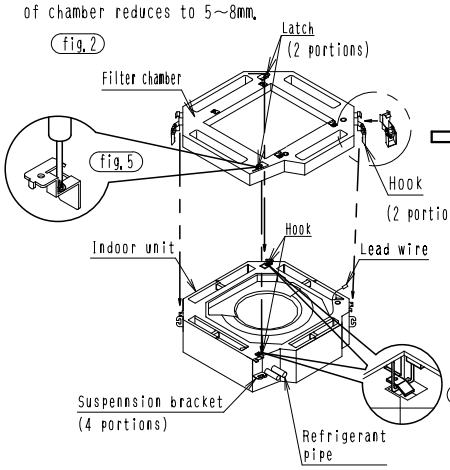


(fig.3) When installing

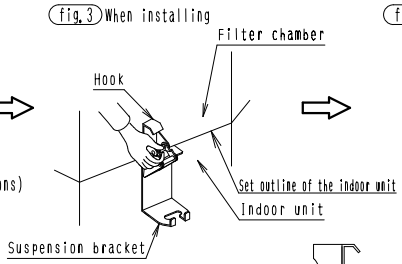


(fig.4) After installation

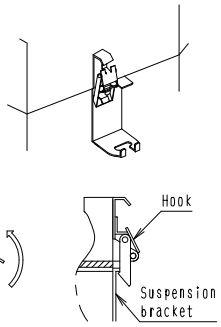


(fig.3) When installing

C : 3K011147B

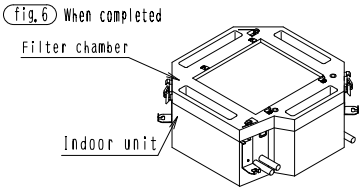


## ❸ Installation of the indoor unit and the Ultra-long life filter unit

- Install the indoor unit and the Ultra-long life filter unit.
  Refer to the installation manual of the indoor unit.
  (For the height of the unit, refer to the drawing on the right.)
- Be complete installated refrigerant piping, and drain piping.
- Attach the paper pattern for installation to the indoor unit with screws to protect the indoor unit from dirt. [See below]
  (When the indoor unit is newly installed)
  (See below)
- In case of attaching the chamber after installed indoor unit.
  For the height of the unit, change the height shown on the right drawing.

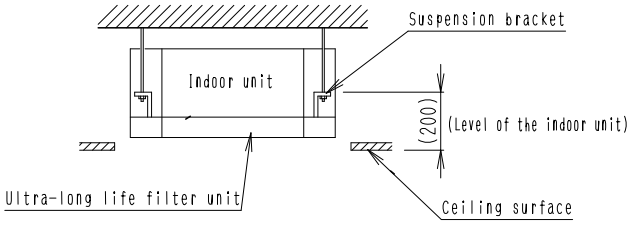


〔Attachment of the paper pattern〕

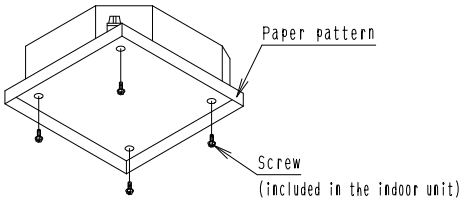


## ❹ Installation of the Decoration panel and the Ultra-long life filter

- Install the Decoration panel in accordance with the installation manual attached to the decoration panel.

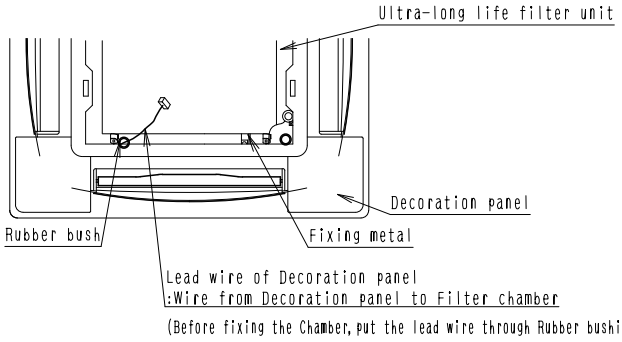


- Installation of the Ultra-long life filter
  After connecting, install the Filter chamber. (fig. 7)

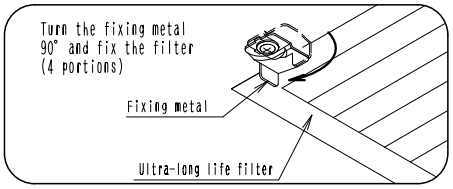


(In case of the panel for Wireless remote controller)

- Put the Connector for receiver lead wire through rubber bush and connect to the indoor PC board.
- Refer to the installation manual attached to the Wireless remote controller kit(optional)for the detail.

3K011147B

## 3.11 KAFJ55K160H — Replacement ultra long life filter

**KAFJ55K160H**

**Caution**

- Can be water-washed. Can be reused.
- The filter chamber (KDDFP55D160) is required when the ultra long life filter will be installed.

**Dimensions** **Unit:mm**

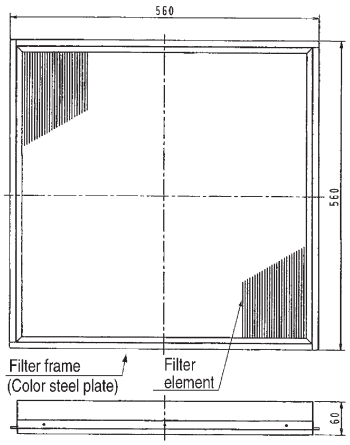


J : D3K2174A

| Item / Model | | KAFJ55K160H |
|---|---|---|
| Initial pressure loss | Pa | 8 or less |
| Final pressure loss | Pa | 49 or less |
| Average efficiency | % | 50 (gravity method) |
| Air flow rate | $m^3$/min | 29.5 |
| | l/sec | 492 |
| Life | h | 5,000 (dust concentration 0.3 mg/$m^3$) |
| Filter element | | Polypropylene honeycomb (with mould-proof) |
| Number of sheets included | | 1 |
| Mass (Weight) | kg | 1.7 |

## 3.12 KKSJ55K160 — Chamber connection kit

**KKSJ55K160**

**Dimensions** **Unit:mm**

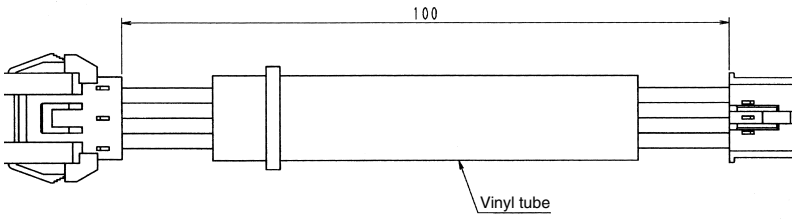


J : D3K2186



### Installation

**Daikin Air Conditioners Chamber Connection Kit Installation manual**

KKSJ55K160 • KKSJ55KA160 Caution : Before installation, read this safety instruction.

Combining with option accessories (chamber-type)

- This chamber connection kit is for use with the multi-flow set. Refer to the catalog, etc. for details on the separately sold items (chamber-type) to be connected.
- Refer to the table at right for combinations of this kit and other option accessories(chamber-type). Also, be sure to install the fresh air intake (chamber-type) kit above.

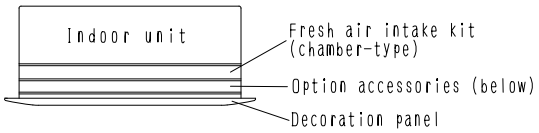


| | Option accessories (chamber-type) | Above: Fresh air intake kit |
|---|---|---|
| below | Air purification unit | ○ |
| below | High Effciency filter unit | ○ |
| below | Ultra-long life filter unit | ○ |
| below | Fresh air intake kit | |

Combinations not listed in this table should not be attempted as they will cause malfunctions.

Contents of parts

Check the following parts

| Name | Relay harness | Clamping material | Others |
|---|---|---|---|
| Shape | ① | ② | This Installation Manual |
| Quantity | 1 PC. | 2 PCS. | |

**Installation of the Chamber connection kit.** Refer to the installation (attachment) manuals included with the indoor unit, the option accessories (chamber-type), and Decoration panel for details on installation (attachment).

Caution Extend the Decoration panel 's swing motor lead wire using the included relay harness ① and connect it to the indoor unit. When doing this, use the included clamping material ② to tie the lead wire so it does not droop.

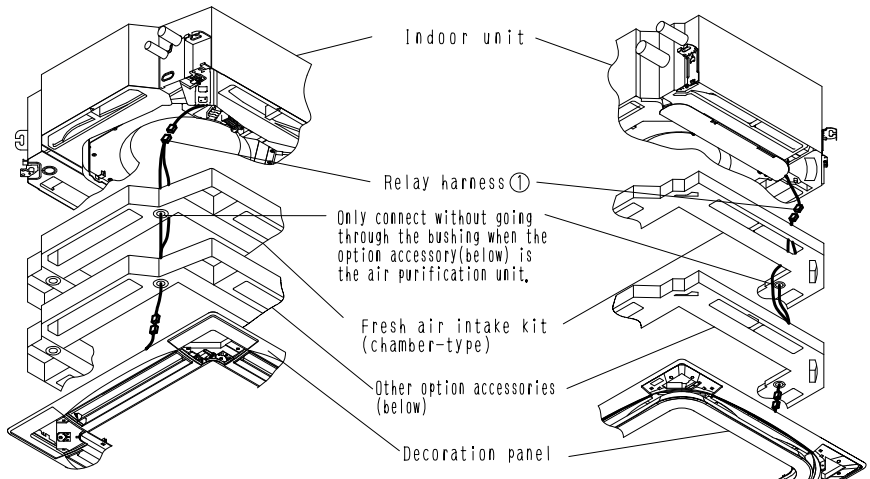


For FHYCP～DVE, ～DVL, FH(Y)C～KVE
FHC～NUV1, FHC～NUV2S, ～KV2S
FXF～LVE, FXFQ～MVE, ～LVEC

For FCQ～KVLT
FCQ(N)～KVEA
FXFQ～PVE(D)

C : 3P089651D

## 3.13 KDJ55K80 / KDJ55K160 — Branch duct chamber

**KDJ55K80**

**Dimensions** **Unit:mm**

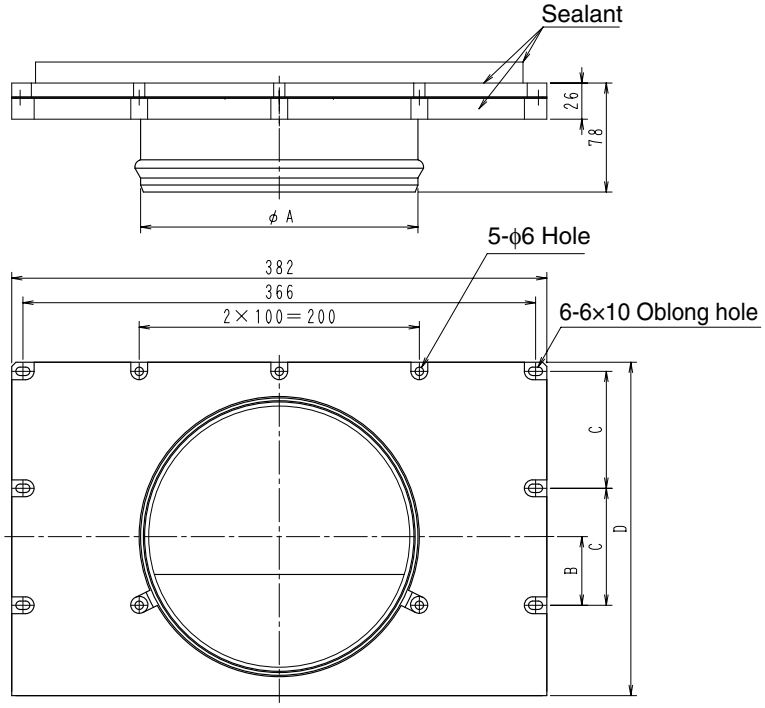


| Model | φA | B | C | D |
|---|---|---|---|---|
| KDJ55K80 | 148 | 16 | 54.5 | 188 |
| KDJ55K160 | 198 | 49 | 83.5 | 238 |

| Item \ Model | KDJ55K80 | KDJ55K160 |
|---|---|---|
| Material | Hot-dip zinc-coated carbon steel sheet | |
| Accessories | Mounting screws : 11<br>Blocking pad : 2 types<br>Insulation material : 3 types<br>Horizontal blade moisture absorber : 5 types<br>Installation manual | |

## Installation

### Caution

- This kit can be installed Ceiling Mounted cassette type air conditioner < Multi flow>.
  Confirm the model number before installing the branch duct chamber.

### Combination Table

| Model Name | Indoor unit to be installed |
|---|---|
| KDJ55K80 | FH(Y)C35~71KVE FHC18NUV2S<br>FHC18~26NUV1 FHC21KV2S |
| KDJ55K160 | FH(Y)C100~140KVE FHC24~48NUV2S<br>FHC30~48NUV1 |

- Refer to the Installation manuals for the indoor unit and the decoration panel.
- Use the following duct kit. If not, use the equivalent duct as the followings.

| Branch duct chamber | Connecting duct kit name |
|---|---|
| KDJ55K80 | K-FDK151D (1 m) or K-FDK152D (2 m) (Flexible duct nominal diameter ϕ150) |
| KDJ55K160 | K-FDK201D (1 m) or K-FDK202D (2 m) (Flexible duct nominal diameter ϕ200) |

### Components

| Name | Branch duct chamber | Screw | Installation manual | Blind plate A | Blind plate B | Insulation for indoor unit | Sealing material for indoor unit opening | Moisture absorber for horizontal blade |
|---|---|---|---|---|---|---|---|---|
| Qty | 1 | 11 | 1 | 1 | 1 | 3 types | 2 types (each 2 sheets) | 1 type |
| Shape | | M4×16 | | | | ① ② ③ Small Large | ④ ⑤ Small Large | |

## ① Field setting of indoor unit

When installing the branch duct chamber, indoor unit setting is required.
Set the setting position number as shown in the table using the field setting mode of remote controller.
As for the field setting mode, refer to the " Field setting procedures" attached to the remote controller.

| | Mode No. | Setting switch No. | Setting position No. |
|---|---|---|---|
| Setting of discharge direction | 13 or 23 | 1 | 02 |

## ② Installation of Branch duct chamber

When installing the indoor unit after the branch duct chamber is mounted (new installation), do not apply the load to the chamber. Otherwise, it may deform.

(1) Take off the decoration panel in accordance with the reverse procedures of installation. For the detail, refer to the installation manual attached to the decoration panel. (When the indoor unit is newly installed, it is not required.)
(2) Select the Installation location for the branch duct chamber. (Fig.1)
(Choose either A or B side of the indoor unit.)
(3) Install the branch duct chamber in accordance with the following procedures.
(Fig.2 shows the case of A side.)
1) Cut the side panel of indoor unit where the branch duct chamber will be installed along the slit. Cut off the inner insulation along the groove.
(Slit : cut with nipper, Groove: cut with cutter knife.) (Fig.2)
2) Adhere the sealing material to cover up the clearance between the side plate and the inner insulation. (Fig.3)
Adhere the sealing material for opening (Small ④) to left and right of the opening, and the sealing material for opening (Large ⑤) in the upper and lower side of the opening.
At this time, bend the sealing material to inside the opening to cover up the clearance between the side plate and the inner insulation.
3) Install the branch duct chamber. (Fig.4)
Insert the inner insulation to the opening of the indoor unit (inner insulation).

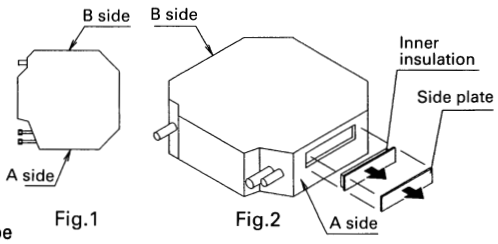

Fig.1 Fig.2

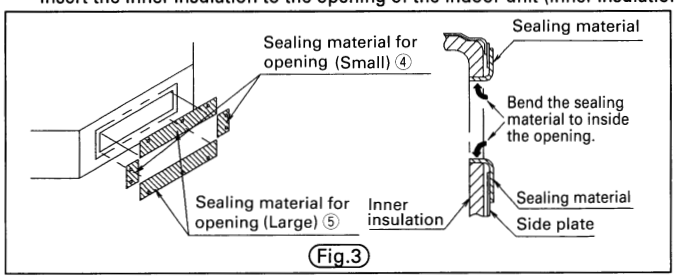

Fig.3

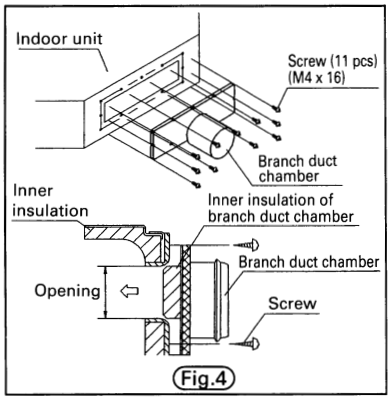

Fig.4

JC : 1P012634B

(4) Adhere the insulation to the indoor unit. ( Illustration shows the A side example.) (Fig.5)

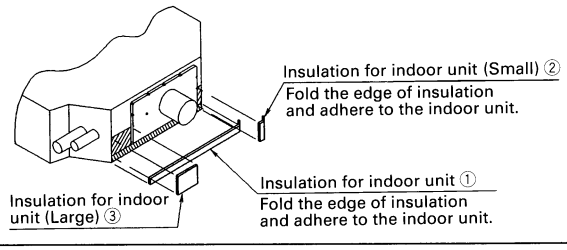


(Fig.5)

## ③ Duct connection 〈Duct : KDJ55K80 ... Nominal diameter $\phi$ 150 / KDJ55K160 ... Nominal diameter $\phi$ 200〉

1) Connect the duct to the outside of the branch duct chamber. (Fig.6)
- Wrap the vinyl tape (Field supply) around the connection to prevent air leak after connecting.
- **All ducts must be insulated.**

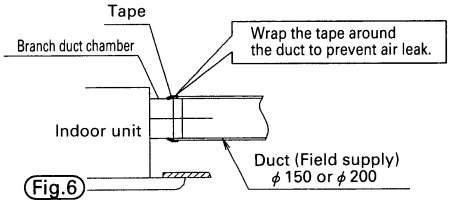


(Fig.6)

2) Following duct work is prohibited.

To bend excessively

To bend many times

To reduce diameter

1. Beware that, in accordance with the local law, there may be cases where the use of a nonflammable duct is compulsory.
2. When a duct goes through fire protection areas, including a fire proof structure, beware that, in accordance with the local law, it may be required to establish a damper or to build a structure that is not detrimental to fire protection.
3. When penetrating a wooden construction wall with a metal duct, apply electrical insulation to the duct and wall.

## ④ Installation of closing material for the indoor unit

(1) Installation location closing material for air outlet
Close the branch duct chamber side air outlet.

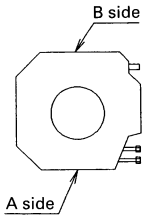


(Fig.7) Installation location of Branch Duct Chamber

(Fig.8)

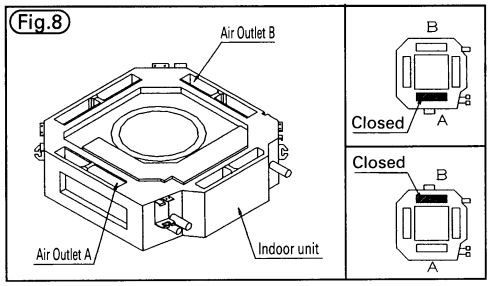


(2) Adhesion of closing material
Make sure each symbol of sealing materials corresponds to that of air outlet in (Fig.8).

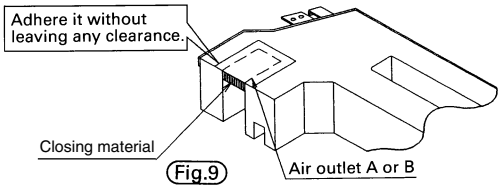


(Fig.9)

## ⑤ Installation of Decoration Panel

Refer to the Installation manual attached to the decoration panel.
After the installation, make sure that there is no clearance between the decoration panel and the indoor unit.
Adhere the moisture absorber for horizontal vane to the edge of the horizontal vane of air outlet as shown on the right.

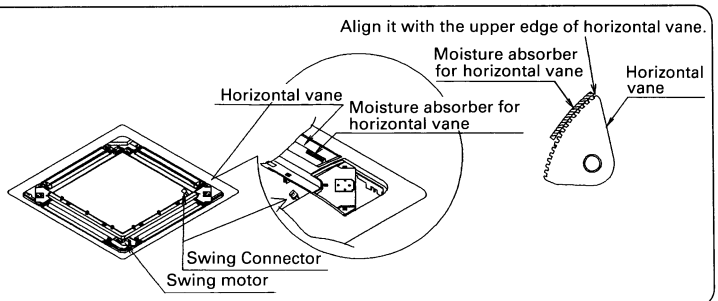


JC : 1P012634B

## 3.14 KRP1B98 — Installation box for adaptor PCB

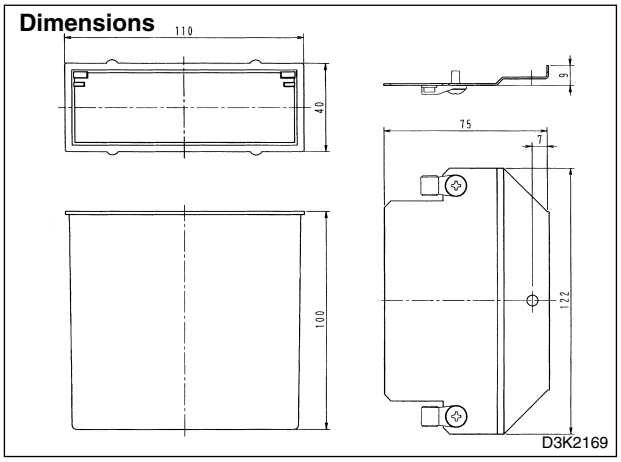


| Item \ Model | KRP1B98 |
|---|---|
| Adaptor for wiring | KRP1BA57<br>KRP4AA53 |

3

# 4. FH-NU

## 4.1 KAFJ501D80 / KAFJ501D112 / KAFJ501D160 — Replacement long-life filter

**KAF501DA56 / KAFJ501D56**

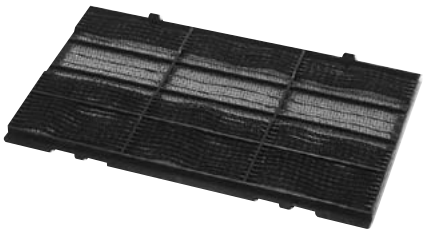

**Caution**

· Can be water-washed. Can be reused.

**Dimensions** **Unit:mm**

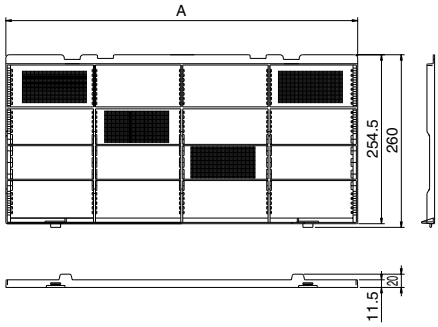


| Model | A |
|---|---|
| KAF501DA56<br>KAFJ501D56 | 430 |
| KAF501DA80<br>KAFJ501D80 | 530 |
| KAF501DA112<br>KAFJ501D112 | 430 |
| KAF501DA160<br>KAFJ501D160 | 493 |

D3K3074A

| Item \ Model | | KAF501DA56<br>KAFJ501D56 | KAF501DA80<br>KAFJ501D80 | KAF501DA112<br>KAFJ501D112 | KAF501DA160<br>KAFJ501D160 |
|---|---|---|---|---|---|
| Initial pressure loss | Pa | 10 or less | | | |
| Final pressure loss | Pa | 59 or less | | | |
| Average efficiency | % | 45 (gravity method) | | | |
| Air flow rate | $m^3$/min | 13 | 17 | 24 | 32 |
| | l/sec | 217 | 283 | 400 | 533 |
| Life | h | 2,500 (dust concentration 0.15 mg/$m^3$) | | | |
| Filter element | | Mildew-proof resin net | | | |
| Number of sheets included | | 2 | 2 | 3 | 3 |
| Mass (Weight) | kg | 0.3 | 0.4 | 0.5 | 0.6 |

## 4.2 KHFJ5F80 / KHFJ5F160 — L type piping kit (for upward direction)

**KHFJ5F50**

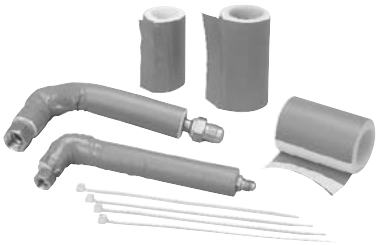

When you install the refrigerant piping in the ceiling, the piping is required to be bent L-type in the unit as shown on the right. This L-type piping kit is developed to facilitate such installation.

**Installation**

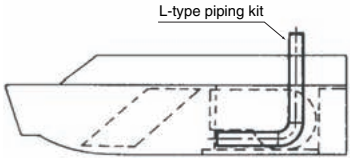


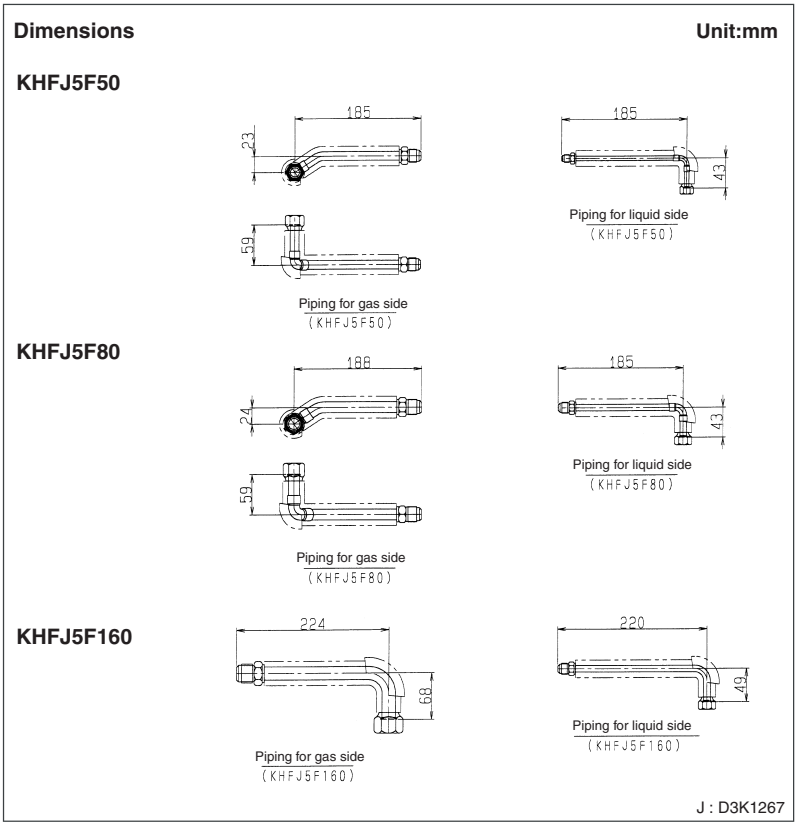


| Item \ Model | KHFJ5F80 | KHFJ5F112 | KHFJ5F160 |
|---|---|---|---|
| Accessories | Installation for fitting : 1 set<br>Clamp material : 1 set | | |

# 5. FDBG-NU

## 5.1 KKD19A1—Drain pan cover

### Installation

Daikin Air Conditioners INSTALLATION BOX FOR DRAINPAN COVER Installation manual

KKD19A1

Read these instructions carefully before performing work.
Perform work as explained herein.

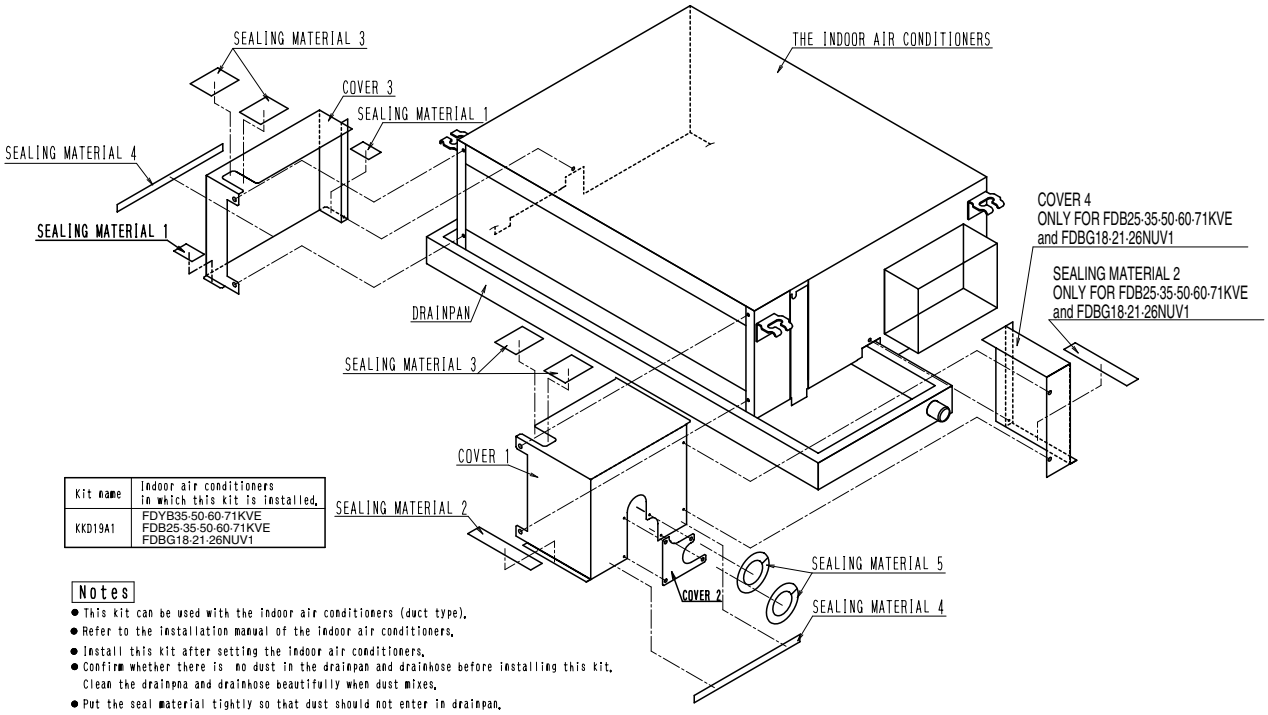


| Kit name | Indoor air conditioners in which this kit is installed. |
|---|---|
| KKD19A1 | FDYB35·50·60·71KVE<br>FDB25·35·50·60·71KVE<br>FDBG18·21·26NUV1 |

Notes

- This kit can be used with the indoor air conditioners (duct type).
- Refer to the installation manual of the indoor air conditioners.
- Install this kit after setting the indoor air conditioners.
- Confirm whether there is no dust in the drainpan and drainhose before installing this kit. Clean the drainpna and drainhose beautifully when dust mixes.
- Put the seal material tightly so that dust should not enter in drainpan.

C : 1P067376A

# 6. RU-NU

## 6.1 KIS95 — Drain piping kit

Use this plug to connect a drain hose to an outdoor unit.

**KIS95**

| Item \ Model | KIS95 |
|---|---|
| Drain hose connection dia | ϕ16 ID |

**Note:**

1. This is the joint for attaching a vinyl hose (field supplied).
   This is used between the drain hole which is on the bottom plate of outdoor unit and vinyl hose.
2. Drain water accumulate to the bottom of outdoor unit it depends on the situation of operation. But it is necessary to connect drain hose not to be spread the drain water over the neighbors, when it is installed on the wall.

### Installation

## Daikin Split Type Room Air Conditioners Installation Manual for Drain Plug 〈KIS95〉

- Use this plug to connect a drain hose so that condensation disposal can be extracted from the outdoor unit.

[1] This kit encases the following parts. So check that these parts are contained upon receipt of the kit.

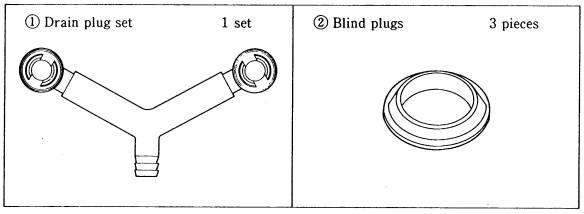


[2] Installation order

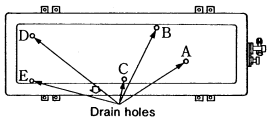


(Viewed from the top)

1) ● Attach drain plug set ① to A and B holes on the base frame.
   ● In case of the unit, the drain hole of which is one of A or B, remove one drain plug from drain plug set ① and attach it to the hole.
   ＊ Hang one side of the plug from the base frame and press it to the directions pointed by the arrow marks to fix it.

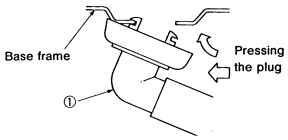


(Do not fix it forcedly with a screw driver, or it may be broken down.)

2) Attach blind plugs ② to C, D and E holes.

3) Use a vinyl hose which is available from markets (I.D. 16mm) and a hose band to connect the hose to the drain plug.

(If the hose droops long, fix it on the way carefully so as not to bend it)

Note :
If the drain holes of the outdoor unit are concealed by the mounting base, floor face, etc., place washers, the height of which is over 30mm under the legs of the outdoor unit.

4K0370

## 6.2 KKPJ5F180 — Central drain plug

**KKPJ5F180**

**Dimensions** **Unit:mm**

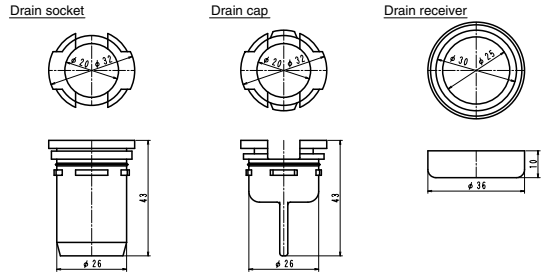


J : D3K1342A

| Item / Model | KKPJ5F180 |
|---|---|
| Connecting drain hose | ϕ25 (inside diameter) |

### Installation

**DAIKIN** Air Conditioners 3P066795-1B

Central Drain Plug Installation Manual <KKPJ5F180>

■ Use this plug to connect a drain hose to dispose the drain from the outdoor unit.

**1 Before Installation** Check that this Kit contains the following parts.

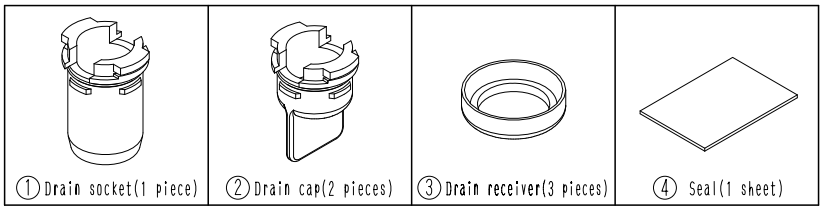


**2 Installation Procedure**

・Please refer to the installation manual of outdoor unit.

1. Insert drain receiver③ onto drain socket① and drain cap② beyond 4 projections around drain socket and drain cap.
   Refer to a right picture(Note:2)

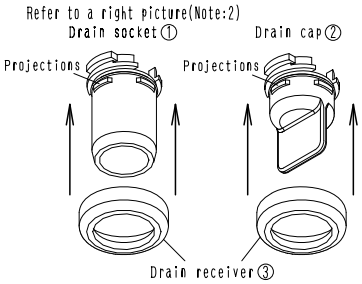


2. Insert drain socket and drain caps into their matching drain hole;Drain socket① into drain hole B and drain caps② into drain hole C and D. After insertion, turn them about 40° clockwise.

Note:1
Be sure not to insert them into wrong drain holse, or there causes water leakage.

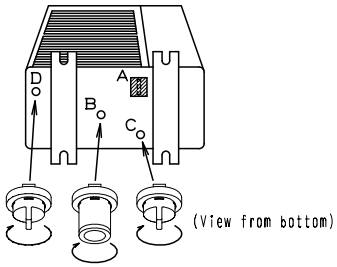


Note:2
Please check whether drain receiver③ is caught in four projections of drain socket① and drain cap② correctly.
It will become the cause of the leak they are not attached correctly.

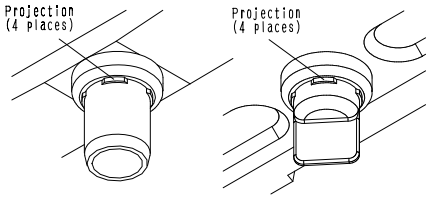


3. Connect vinyl hose on the market(intemal diameter of 25mm) to drain socket①.
   (If the house is too long and hangs down, fix it carefully to prevent the kinks.)
4. Affix seals④ to part A as shown on the above drawing.
   (It is unnecessary when it is the model which does not have opening in A.)
5. After join drainsocket① and draincap②, please check whether there is not any leak to A and the other parts by pouring water.

Note:3
1. If the drain holes of the outdoor unit are covered with the mounting bracket or the floor, raise the unit to provide the space of more than 100mm under the leg of the outdoor unit.
2. Do not use this option in the cold latitudes.
   At bottom frame, drained water is frozen up.

3P066795B

**Warning**

- Daikin Industries, Ltd.'s products are manufactured for export to numerous countries throughout the world. Daikin Industries, Ltd. does not have control over which products are exported to and used in a particular country. Prior to purchase, please therefore confirm with your local authorised importer, distributor and/or retailer whether this product conforms to the applicable standards, and is suitable for use, in the region where the product will be used. This statement does not purport to exclude, restrict or modify the application of any local legislation.
- Ask a qualified installer or contractor to install this product. Do not try to install the product yourself. Improper installation can result in water or refrigerant leakage, electrical shock, fire or explosion.
- Use only those parts and accessories supplied or specified by Daikin. Ask a qualified installer or contractor to install those parts and accessories. Use of unauthorised parts and accessories or improper installation of parts and accessories can result in water or refrigerant leakage, electrical shock, fire or explosion.
- Read the User's Manual carefully before using this product. The User's Manual provides important safety instructions and warnings. Be sure to follow these instructions and warnings.

If you have any enquiries, please contact your local importer, distributor and/or retailer.

## Cautions on product corrosion

1. Air conditioners should not be installed in areas where corrosive gases, such as acid gas or alkaline gas, are produced.
2. If the outdoor unit is to be installed close to the sea shore, direct exposure to the sea breeze should be avoided. If you need to install the outdoor unit close to the sea shore, contact your local distributor.

CERTIFIED JQA MANAGEMENT SYSTEM ISO 9001

JMI-0107

Organization:
DAIKIN INDUSTRIES, LTD.
AIR CONDITIONING MANUFACTURING DIVISION

Scope of Registration:
THE DESIGN/DEVELOPMENT AND MANUFACTURE OF COMMERCIAL AIR CONDITIONING, HEATING, COOLING, REFRIGERATING EQUIPMENT, COMMERCIAL HEATING EQUIPMENT, RESIDENTIAL AIR CONDITIONING EQUIPMENT, HEAT RECLAIM VENTILATION, AIR CLEANING EQUIPMENT, MARINE TYPE CONTAINER REFRIGERATION UNITS, COMPRESSORS AND VALVES.

CERTIFIED JQA MANAGEMENT SYSTEM ISO 9001

JQA-1452

Organization:
DAIKIN INDUSTRIES (THAILAND) LTD.

Scope of Registration:
THE DESIGN/DEVELOPMENT AND MANUFACTURE OF AIR CONDITIONERS AND THE COMPONENTS INCLUDING COMPRESSORS USED FOR THEM

JACO ISO 14001 JAPAN AUDIT AND CERTIFICATION ORGANIZATION FOR ENVIRONMENT AND QUALITY

EC99J2044

All of the Daikin Group's business facilities and subsidiaries in Japan are certified under the ISO 14001 international standard for environment management.

**Dealer**

**DAIKIN INDUSTRIES, LTD.**

Head Office:
Umeda Center Bldg., 2-4-12, Nakazaki-Nishi, Kita-ku, Osaka, 530-8323 Japan

Tokyo Office:
JR Shinagawa East Bldg., 2-18-1, Konan, Minato-ku, Tokyo, 108-0075 Japan

http://www.daikin.com/global_ac/

©All rights reserved

- Specifications, designs and other content appearing in this brochure are current as of June 2009 but subject to change without notice.

ED24-631B
Printed in Japan 6/2009 K FS