TOSHIBA

FILE NO. A04-016

TCS-NET AIR CONDITIONING CONTROL SYSTEM

(TOUCH SCREEN CONTROLLER)

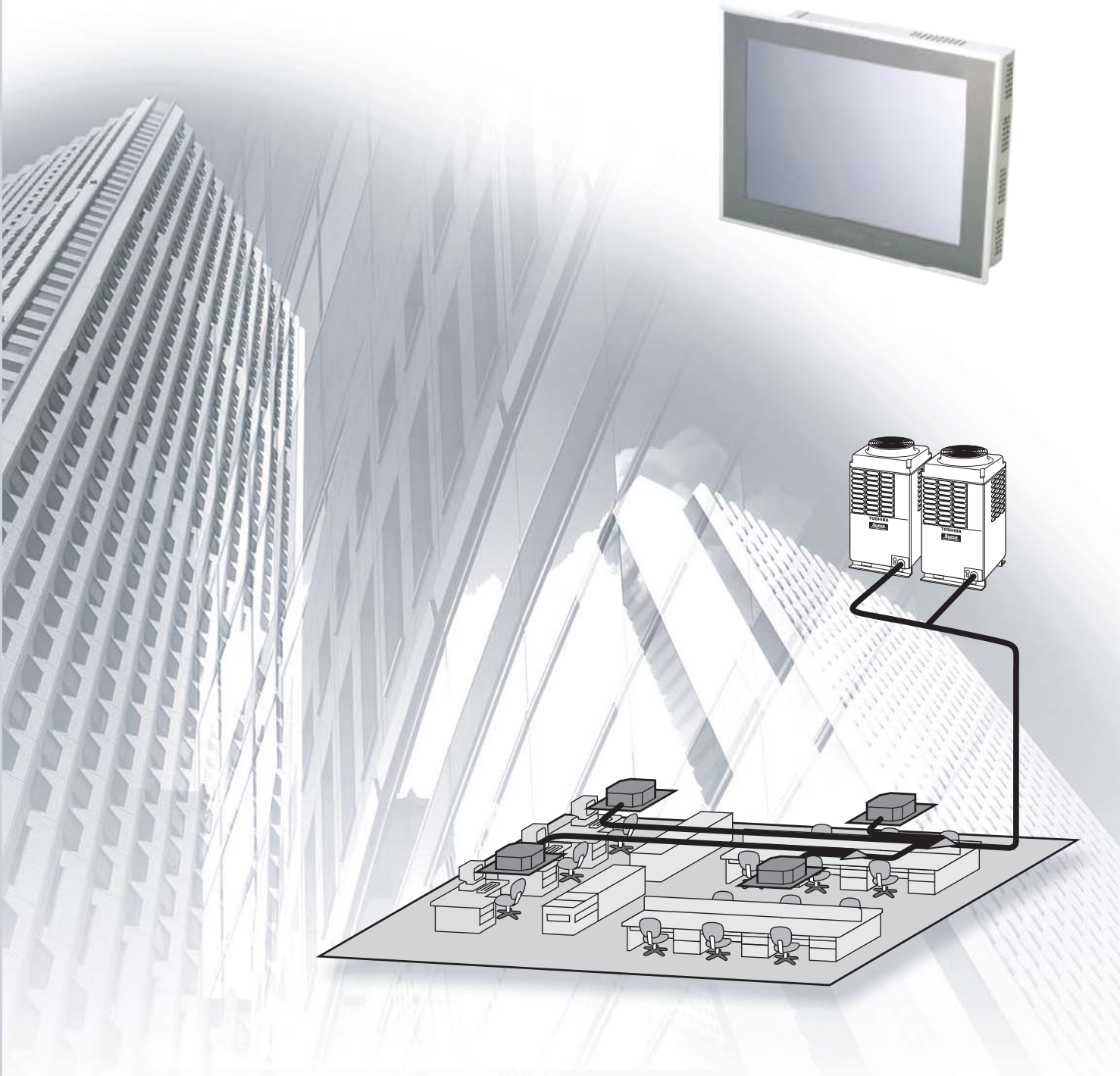

CONTENTS

1 OUTLINE
1-1 TCS-Net Air conditioning control system outline 4
1-2 Component 5
1-2-1 TCS-Net Control system component 5
1-2-2 Application control component 6
1-3 Basic system component 7
1-3-1 Apparatus component 7
1-3-2 The control system devices 8
1-3-3 The control system devices (Procured on site) 9
1-3-4 Software 9
1-4 Touch screen controller function 10
1-5 Energy monitoring and billing function 13
1-6 Input/Output 15

2 SYSTEM CONFIGURATION
2-1 Touch screen controller system configuration 18

3 INSTALLATION
3-1 Installation work flow 24
3-2 Setup file data preparation 25
3-2-1 Control wiring diagram (Connection example) 25
3-2-2 Power meter wiring diagram (Connection example) 26
3-2-3 Air conditioner address table 27
3-2-4 Schedule table 29
3-3 Setup file creation 30
3-3-1 Setup file creation software (Excel macro) 30
3-3-2 Setup file contents 31
3-4 Control system installation 31
3-4-1 External view 34
3-4-2 Installation method 38
3-4-3 Device specifications 42
3-5 Wiring 43
3-5-1 Wiring specifications 43
3-5-2 Wiring diagram 44
3-6 Network connection 53
3-7 Control system configulation 54

4 ADDRESS SETTING
4-1 Address setting flow 56
4-2 Definition of address 57
4-3 Address setting for air conditioner 62
4-3-1 Setting for VRF system 62
(1) Check at main Power-ON 63
(2) Manual setting from wired remote controller 64
(3) Line (system) address setting 66
(4) Power reset 66
(5) Indoor unit address check 67
(6) Trial operation 67
(7) Setup of relay connector and terminator 68
(8) Central control address setting 71
(9) Trial operation for central controller (TCB-SC642TLE) 73
(10) Automatic address setting (for reference) 74
(11) Clearance of address 77
(12) Confirmation of indoor unit address and position by using the remote controller 78
(13) Address change from remote controller 79
(14) In case of increase the address-undefined indoor units (Extension, etc.) 81
(15) Address setup example (VRF system) 82
4-3-2 Setting for 1 by 1 system 85
(1) Address re-setup 85
(2) Indoor address change example 89
4-4 Address setting for Control System devices 91
4-4-1 Address setting flow 91
4-4-2 Setting for Intelligent server 92
4-4-3 Setting for TCS-Net relay interface 93
4-4-4 Setting for Energy monitoring relay interface 94
4-4-5 Setting for Digital I/O relay interface 95

5 TRIAL OPERATION
5-1 Trial operation 98
5-2 Air conditioning control system troubleshooting 101
5-2-1 Faults of air conditioner 101
5-5-2 Faults of air conditioning control system 101

1

OUTLINE

1-1 TCS-Net Air conditioning control system outline
1-2 Component
1-2-1 TCS-Net control system component
1-2-2 Application control component
1-3 Basic system component
1-3-1 Apparatus component
1-3-2 The control system devices
1-3-3 The control system devices (Procured on site)
1-3-4 Software
1-4 Touch screen controller function
1-5 Energy monitoring and billing function
1-6 Input/Output

1-1 TCS-Net Air conditioning control system outline

The TCS-Net Air conditioning control system has achieved easy-to-operate central air conditioning control with the LCD Touch Screen Controller that integrates advanced functions. The system allows operation status monitoring, operation control, scheduled operation, and error code display of up to 512 indoor units with one controller. It is also equipped with functions for energy monitoring and billing (for each indoor unit) and for operation control using external input/output signals.

Operation status monitoring
Monitors operation status of all air conditioners collectively.

Operation control
Controls operation of devices easily with the LCD touch panel. Allows elaborate operation settings, such as collective operation of entire building or each block/tenant/area, as well as individual operation of each indoor unit.

Operation schedule
Allows elaborate operation schedule settings for each area.

Error code display
Displays failure information and location real time when a failure occurs. Also displays fault log information.

Energy monitoring and billing
Distributes power for each indoor unit, and outputs the calculation results as daily/monthly reports.

I/O function
Provides operation control using external input signals, and outputs emergency signals to external devices.

1-2 Component

1-2-1 TCS-Net control system component

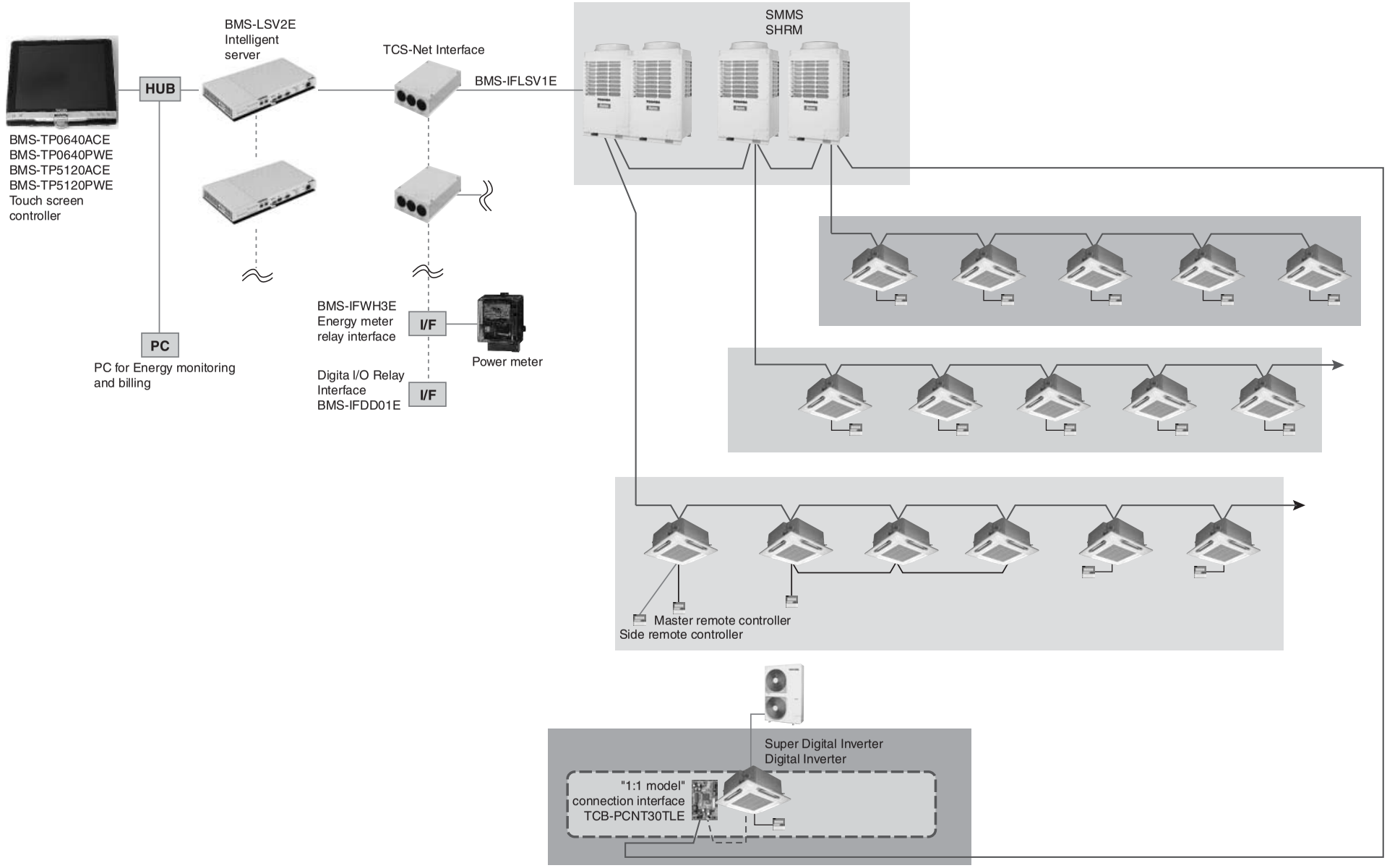

1-2-2 Application control component

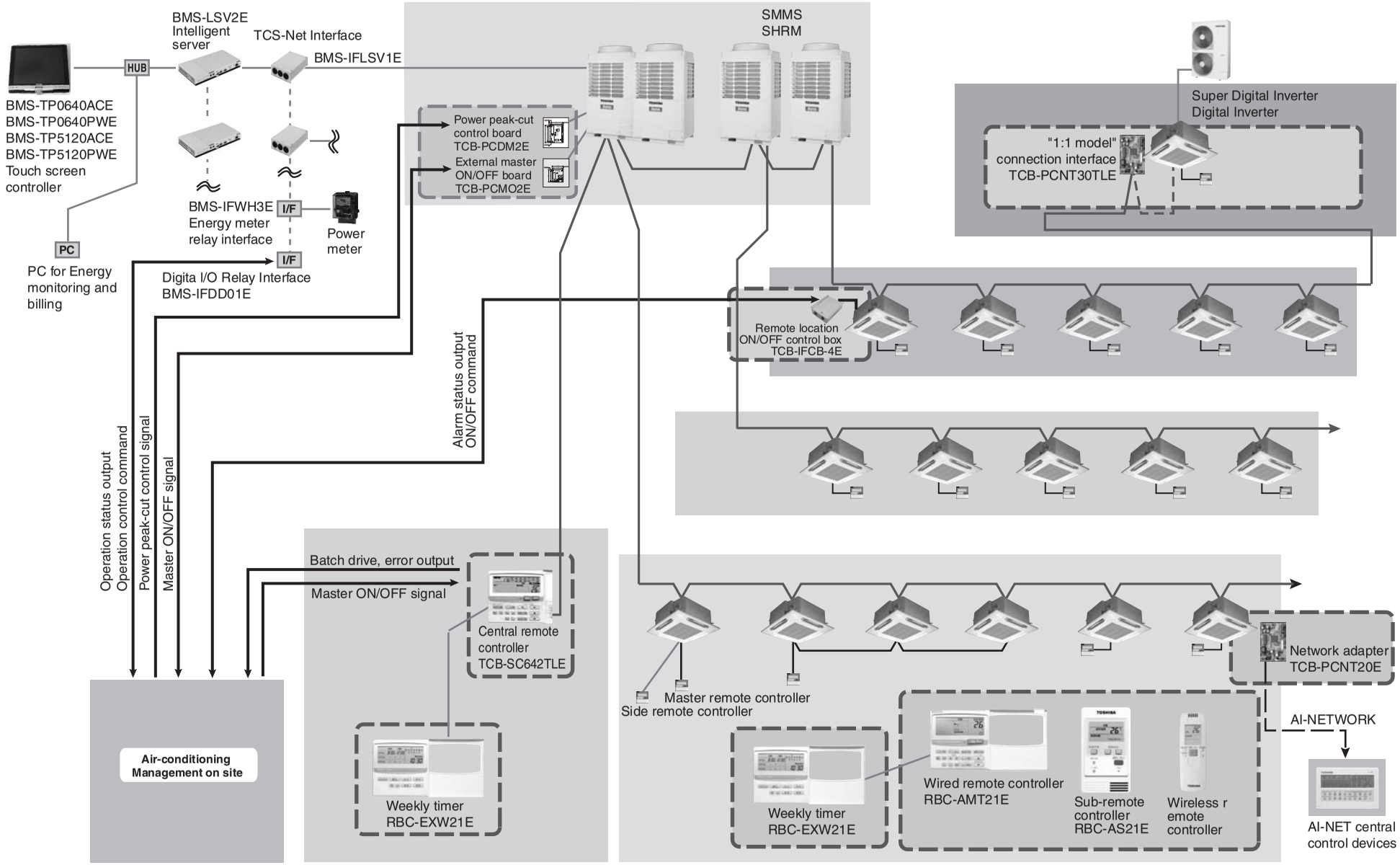

1-3 Basic system component

1-3-1 Apparatus component

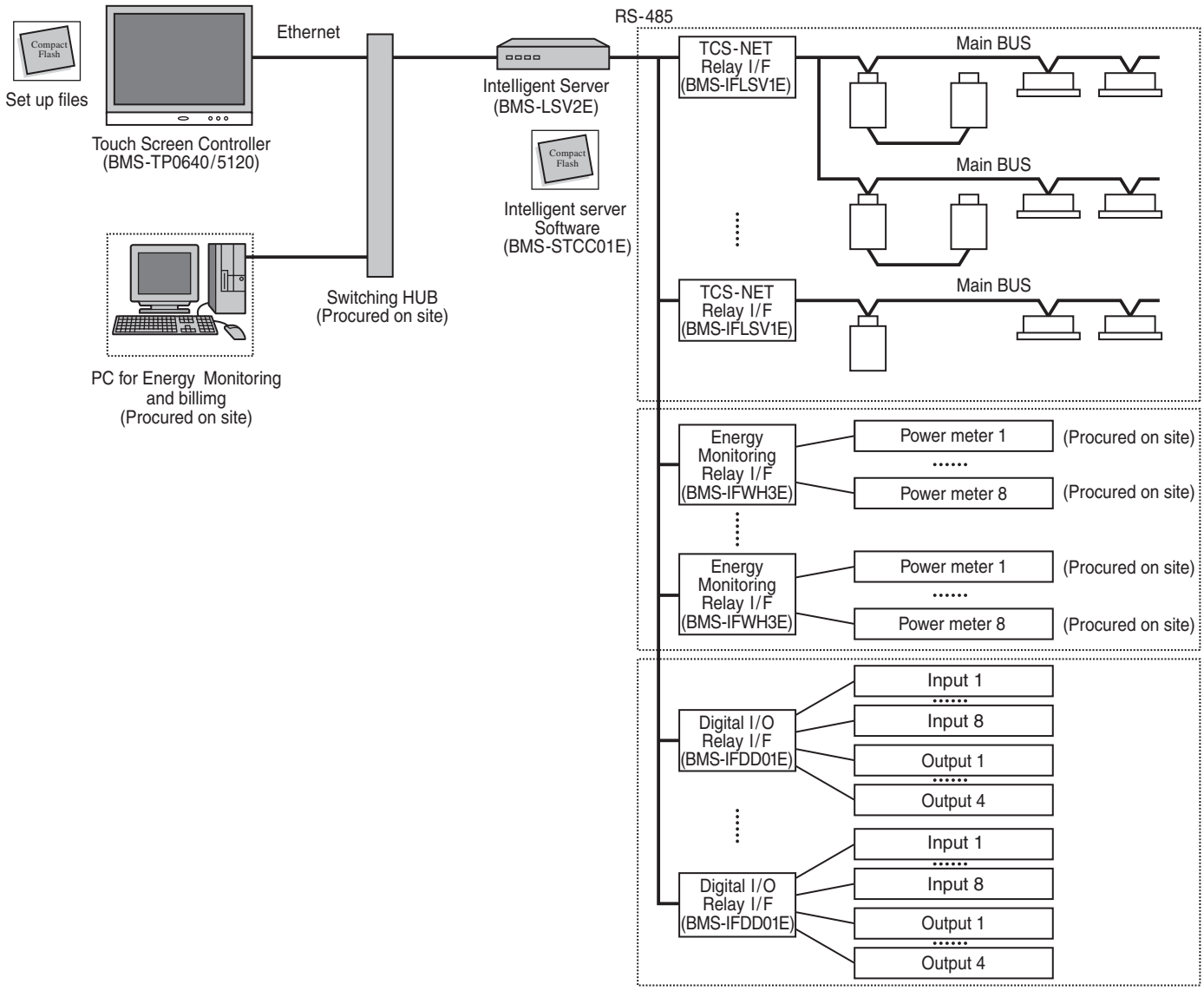

System Configuration Table

Function	Monitoring/Control/Scheduling/Error code display		×		×		×		×	
	Energy monitoring and billing				×				×	
	Indoor units connected		Max. 64 units		Max. 64 units		Max. 512 units		Max. 512 units	
	Digital I/O			×		×		×		×
Devices	Touch Screen Controller		BMS-TP0640ACE		BMS-TP0640PWE		BMS-TP5120ACE		BMS-TP5120PWE	
	Intelligent Server	BMS-LSV2E	×	×	×	×	×	×	×	×
	Intelligent Server Software	BMS-STCC01E	×	×	×	×	×	×	×	×
	TCS-NET Relay I/F	BMS-IFLSV1E	×	×	×	×	×	×	×	×
	Energy Monitoring Relay I/F	BMS-IFWH3E			×	×			×	×
	Digital I/O Relay I/F	BMS-IFDD01E		×		×		×		×
	PC (for Energy monitoring and billing)	Procured on site			×	×			×	×
	Switching HUB	Procured on site	×(*)	×(*)	×(*)	×(*)	×(*)	×(*)	×(*)	×(*)

(*) A Switching HUB is required when using two or more Intelligent server or when connecting to a PC for Energy Monitoring and billing.

1-3-2 The control system devices

Name	Model name	Appearance	Performance
Touch Screen Controller	BMS-TP0640ACE BMS-TP5120ACE BMS-TP0640PWE BMS-TP5120PWE		Operation monitoring Operation control Operation schedule Error code display Fire alarm input Energy monitoring data saving in CF card
Intelligent Server	BMS-LSV2E		Data collection
Intelligent Server Software	BMS-STCC01E		Data collection software (This software is used for Intelligent server)
TCS-Net Relay Interface	BMS-IFLSV1E		Protocol transformation Main BUS to RS-485
Energy Monitoring Relay Interface	BMS-IFWH3E		Power meter interface
Digital I/O Relay Interface	BMS-IFDD01E		Input and output interface Fire alarm input Key input Error output

1-3-3 The control system devices (Procured on site)

Name	Performance	Specification
Power meter	Mesurement of power consumption Output data by pulse signal	Pulse output type Pulse generator constants: 1kWh/pulse or 10kWh/pulse Pulse duration: 50 - 1000 ms Output terminal: ON/OFF contactor
Switching HUB and Ethernet wire	Network with Touch screen controller Intelligent server Energy monitoring PC	HUB: 10BASE-T compliant (*) Number of ports: as required Ethernet wire: Category5 UTP straight cable (with HUB) Category5 UTP cross cable (without HUB)
PC for energy monitoring and billing	Energy monitoring calculation Electricity billing calculation Monthly report creation	Microsoft Excel is required for the energy monitoring and billing function OS: Windows 2000 or later Excel: Excel 2000 or later

* 100BASE-T compliant HUB is required in using 5 or more servers, or 2 or more controllers.

1-3-4 Software

Name	Performance	Note
Monthly report creation software	Monthly report creation Power distribution calculation Billing calculation Daily sum report creation	This software is provided by CD-ROM

1-4 Touch screen controller function

Monitoring

All Indoor unit conditions can be monitored by the controller.

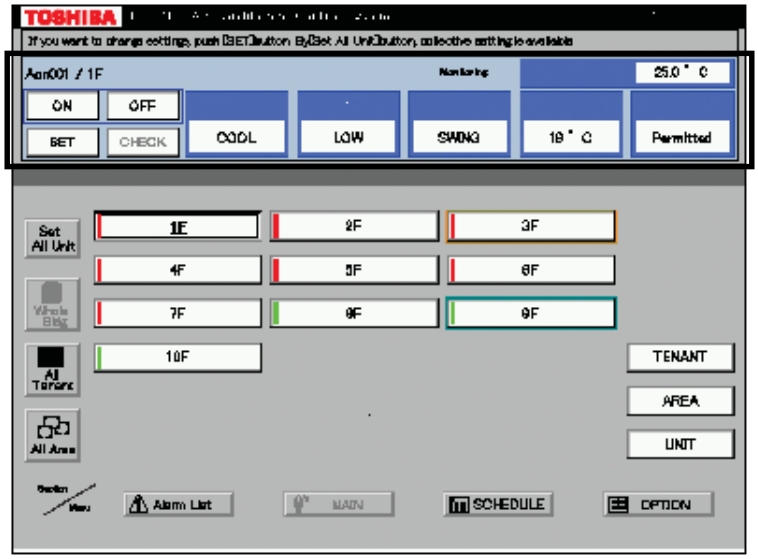

Monitoring Items

Mode
FAN mode
FLAP setting
Set Temperature
Inlet air temperature
R/C control prohibition

Control

All Indoor unit operation can be controled within user's selected division.

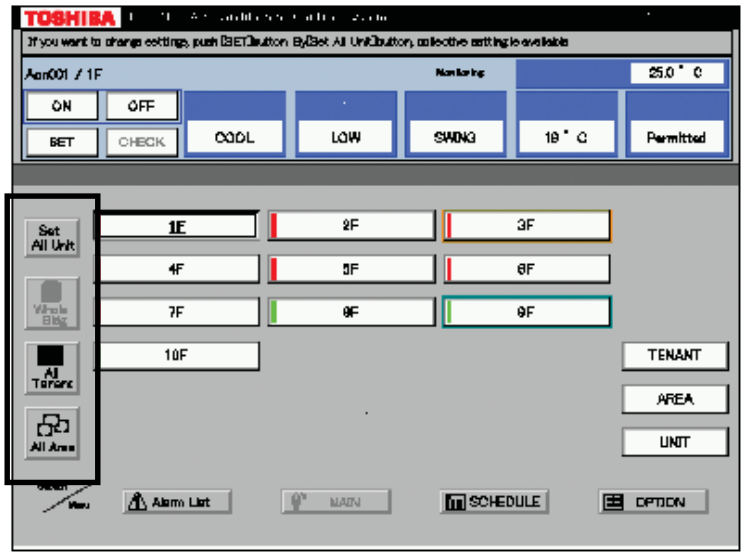

Controlable division

Whole building
All tenant
All area
Unit

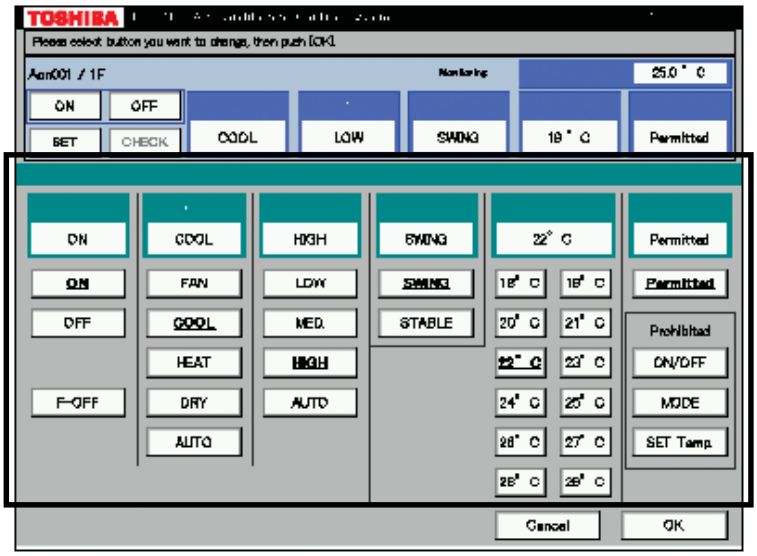

Setting Items

Mode
FAN mode
FLAP setting
Set Temperature
Inlet air temperature
R/C control prohibition (7 combination)

	ON/OFF prohibition	MODE prohibition	SET TEMP prohibition
1	×	–	–
2	–	×	–
3	–	–	×
4	×	×	–
5	×	–	×
6	–	×	×
7	×	×	×

Management zone categories

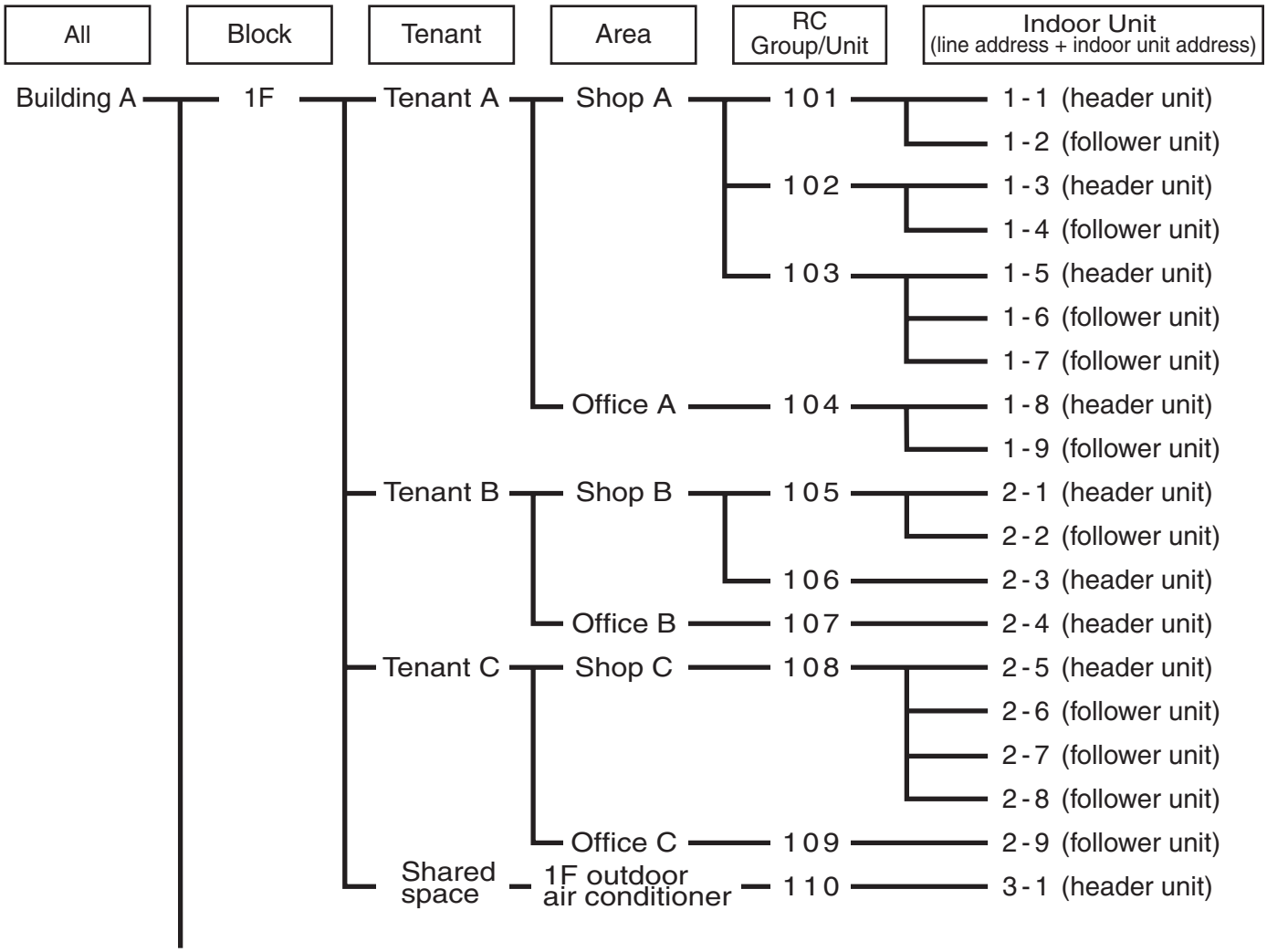

Scheduling

A basic operation schedule pattern is determined by setting weekly and monthly operation schedules. These schedules can be set for each area.

Weekly schedule setting

Up to 20 patterns a day (including ON and OFF) can be set.

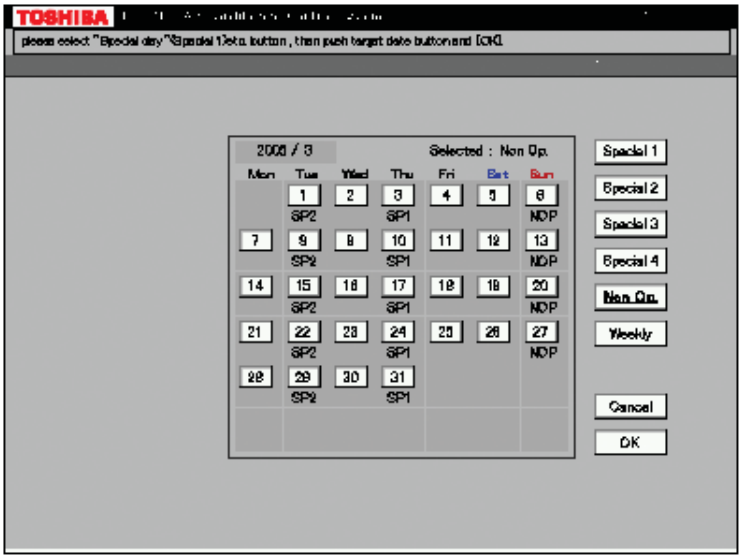

Monthly schedule setting

Schedule patterns except for weekly schedule patterns can be set as special-day patterns. Up to four special-day patterns can be set. Non-operation dates can also be set.

Error code display

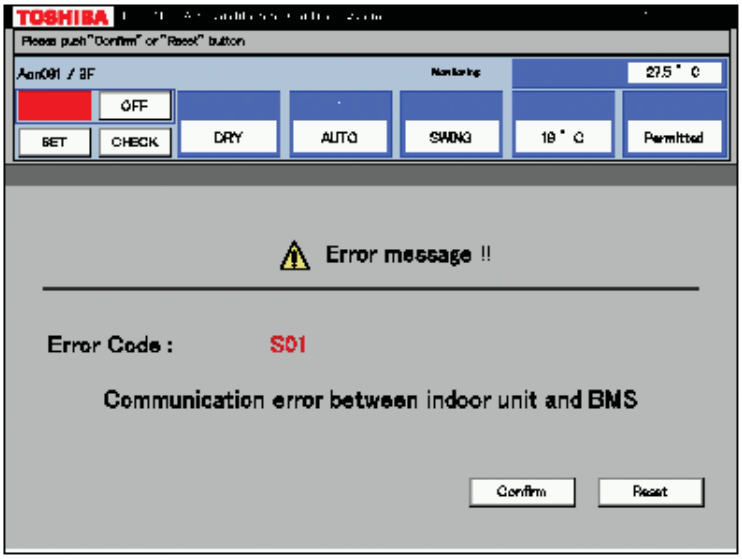

When an error occurs in a device, an error code is displayed.

Fault log display

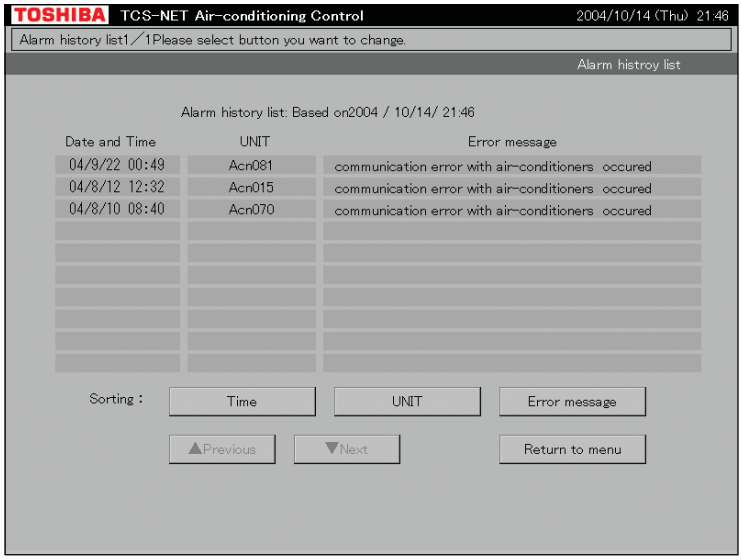

1-5 Energy monitoring and billing function

Distributes total power consumption for each indoor unit according to the billing schedule set by the Touch Screen Controller. Reads the system setup file and the operation result file saved in the CF card of the Touch Screen Controller into the PC, and calculates power distribution result using the dedicated report creation software (Excel macro) to create spreadsheets and monthly reports.

Data flow

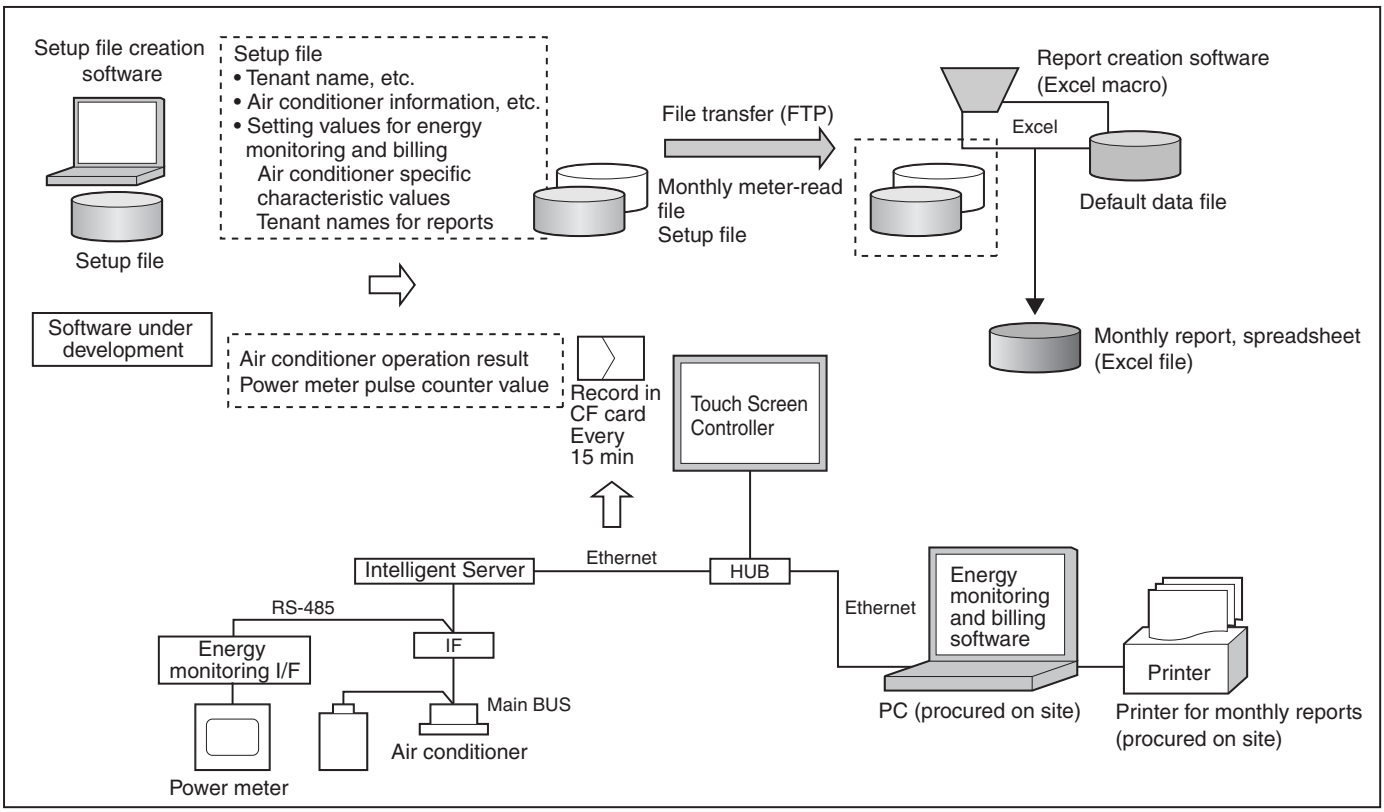

Specifications

PC operating environment	OS	Windows 2000 or later
	Excel	Excel 2000 or later is required separately.

A PC for energy monitoring and billing and a printer should be procured on site.

Electricity billing schedule

Touch Screen Controller sets a billing schedule for monthly reports.

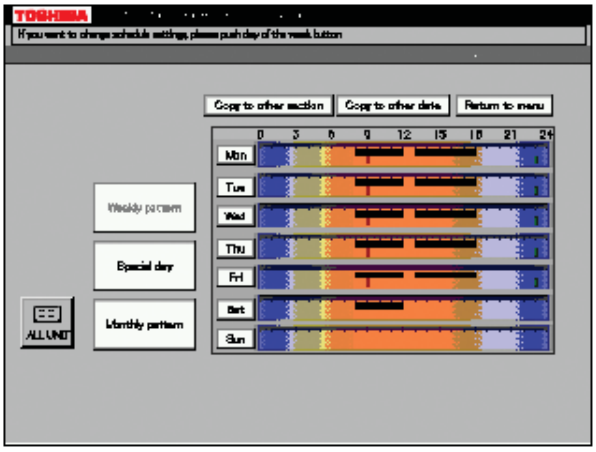

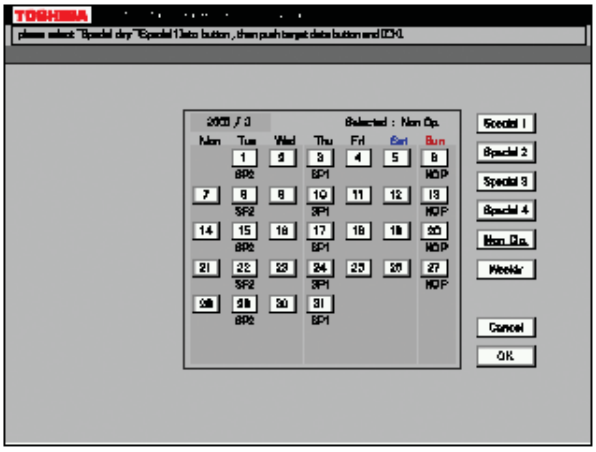

Monthly Report

The report creation software creates monthly reports in Excel file format.

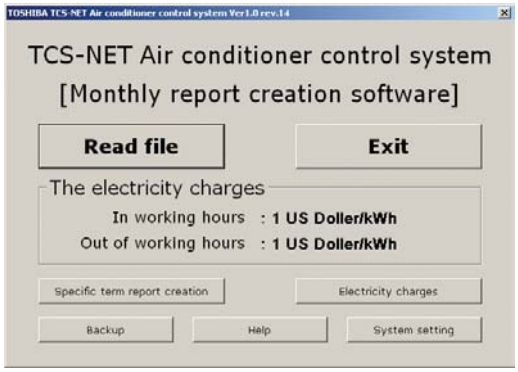

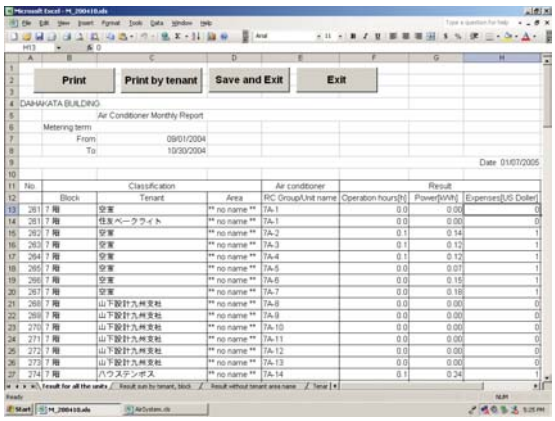

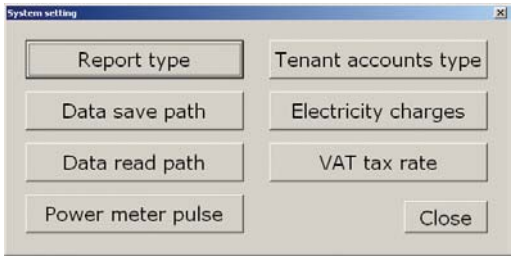

Monthly report printout sample

Toshiba BUILDING.							
		Air Conditioner Monthly Report					
	Metering term						
	From	10/01/2004					
	To	10/31/2004					
							Date 01/07/2005
No.	Classification			Air conditioner	Result		
	Block	Tenant	Area	RC Group/Unit	Operation hours[h]	Power[kWh]	Expenses[*]
1	7F	Tenant A	no name	7A-1	0.1	0.10	0
2	7F	Tenant A	no name	7A-2	0.1	0.15	0
3	7F	Tenant B	no name	7B	2.0	0.50	1
4	7F	Tenant B	no name	7C	2.0	0.50	1
5	7F	Tenant B	no name	7D	0.3	0.03	0
6	7F	OfficeA	Meeting room	8A	0.1	0.01	0
7	8F	OfficeA	Office	8B	5.3	0.70	1
8	8F	OfficeA	Office	8C	5.3	0.50	1
9	8F	Vacancy	no name	8D	0.0	0.00	0
10	9F	Vacancy	no name	8D	0.0	0.00	0
				total	15.2	2.5	2.5

Report creation software functions

Function	Description	Remarks
Monthly report creation	Creates operation result reports for each indoor unit group aggregates by the touch screen controller based on the setup files.	Operation result report type: • Display operation hours • Display operation hours, display by In/Out working hours • Display operation hours/consumption/billing • Display operation hours/consumption/billing, display by In/Out working hours
	Creates 4 types of spreadsheets for monthly report.	Spreadsheet type: • Operation result for all the units • Operation result without tenant, Area name • Operation result sum by tenant, block • Accoounts sum by tenant
Power distribution calculation	Calculates power distribution for each indoor unit group	
Billing calculation	Calculates expenses for each indoor unit group	
Daily sum report creation	Aggregates daily reports in specified range to create a monthly report.	

1-6 Input/Output

This system controls air conditioners by interlocking them with electric lock signals and fire alarm signals, and transmits air conditioner emergency signals to other devices.

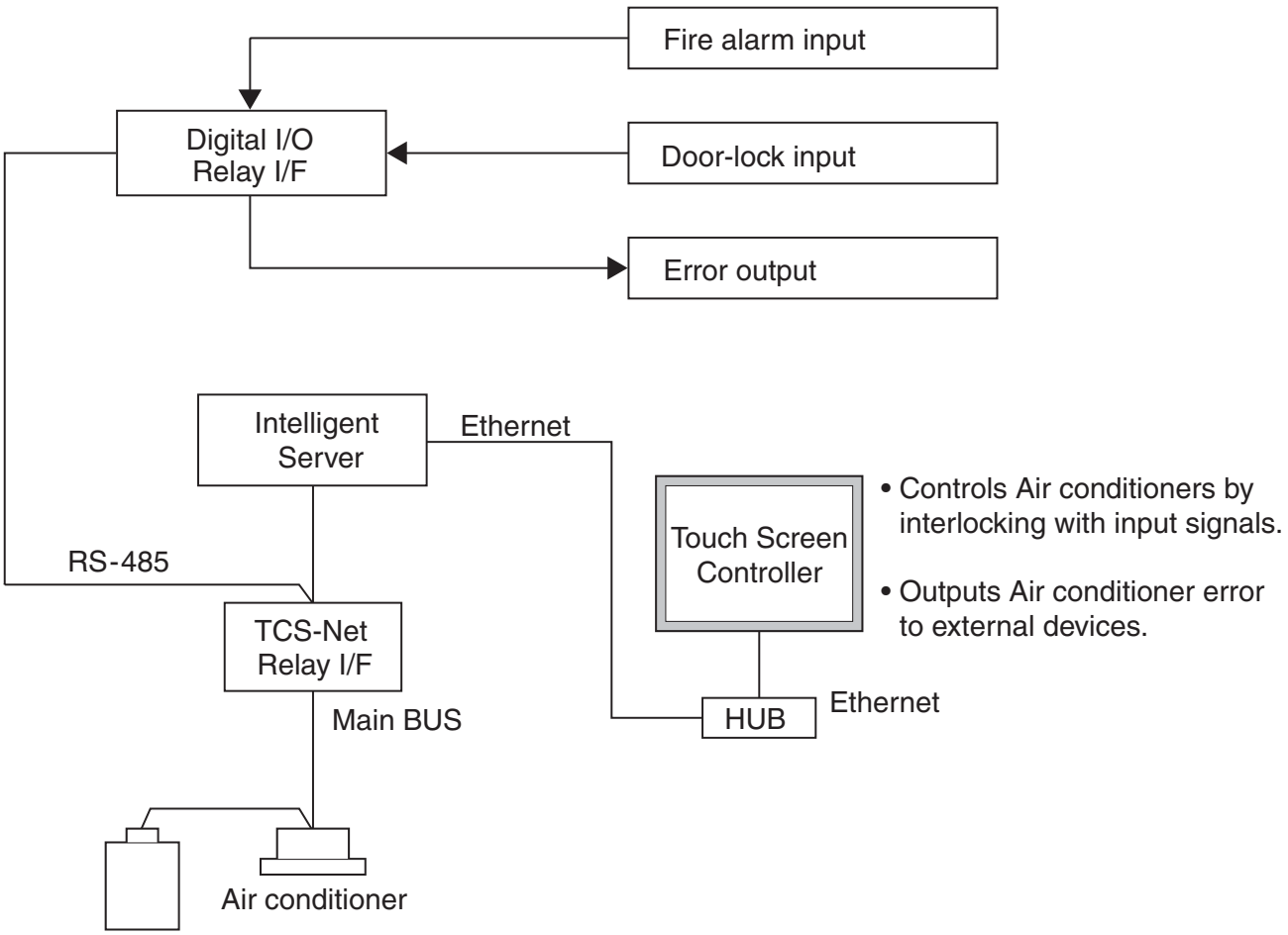

2

SYSTEM CONFIGURATION

2-1 Touch screen controller system configuration

2-1 Touch screen controller system configuration

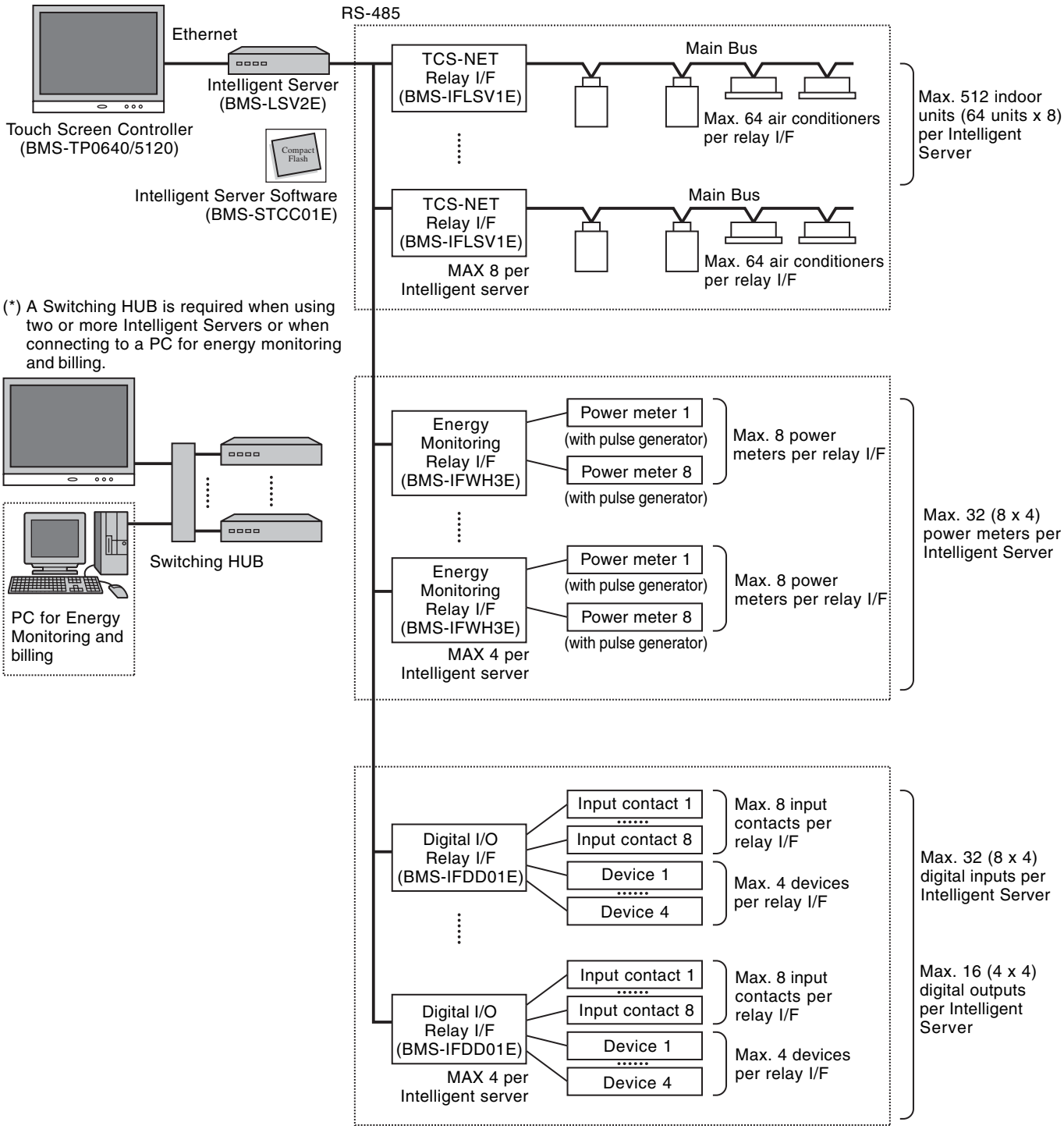

System Configuration Table

(× ··· available – ··· not available)

	Touch Screen Controller		BMS-TP0640ACE	BMS-TP0640PWE	BMS-TP5120ACE	BMS-TP5120PWE
Function	Air conditioning monitoring/control		×		×	
	Energy monitoring and billing		–	×	–	×
	Indoor units connected		Max. 64 units		Max. 512 units	
Component	Intelligent Server	BMS-LSV2E	1 unit		Max. 4 units	
	Intelligent Server Software	BMS-STCC01E	1 unit		1 unit per Intelligent Server (max. 4 units in total)	
	TCS-NET Relay I/F	BMS-IFLSV1E	Max. 8 units		Up to 8 units per Intelligent Server (max. 32 units in total)	
	Energy Monitoring Relay I/F	BMS-IFWH3E	–	Max. 4 units	–	Max. 4 units
	Digital I/O Relay I/F	BMS-IFDD01E	Max. 4 units		Max. 4 units	

Switching HUB	Procured on site	*1	Comply with 10BASE-T*2 Number of ports: As required
Ethernet wire	Procured on site		Category 5 UTP straight wire
PC	Procured on site		OS: Windows 2000 or later, Excel 2000 or later
Power meter	Procured on site	*3	Pulse output type Pulse generator constants: 1 kWh/pulse or 10 kWh/pulse Pulse duration: 50 - 1000 ms Output terminal: ON/OFF contactor

*1: The number of ethernet wires and the number of switching HUB port vary with the number of Intelligent Server connected.
*2: 100 BASE-T compliant is required in using 5 or more server, or 2 or more controllers.
*3: The number of power meters vary with power meter specifications.

- Two or more refirgerant system can be connected to one power meter.
- For heat recovery VRF (SHRM) and “Super digital inverter”, “Digital inverter”, it is necessary to install the power meter independently.
- All power meters connected same controller must be set same pulse generator constants.

System configuration examples

The following lists required component devices in each category.

1. Without energy monitoring

(A) Up to 64 indoor units

Device	Model	Quantity	Remarks
Touch Screen Controller	BMS-TP0640ACE	1	
Intelligent Server	BMS-LSV2E	1	
Intelligent Server Software	BMS-STCC01E	1	
TCS-NET Relay Interface	BMS-IFLSV1E	Max. 8	Up to 8 units per Intelligent Server
Digital I/O Relay Interface	BMS-IFDD01E	Max. 4	
Ethernet wire	Procured on site	*1	Category5 UTP cross cable

(B) Up to 512 indoor units

Device	Model	Quantity	Remarks
Touch Screen Controller	BMS-TP5120ACE	1	
Intelligent Server	BMS-LSV2E	Max. 4	
Intelligent Server Software	BMS-STCC01E	Max. 4	Same quantity as Intelligent Server required
TCS-NET Relay Interface	BMS-IFLSV1E	Max. 32*2	*2 Up to 8 units per Intelligent Server
Digital I/O Relay Interface	BMS-IFDD01E	Max. 16*3	*3 Up to 4 units per Intelligent Server
Ethernet wire	Procured on site	*1	Category5 UTP straight cable
Switching HUB	Procured on site	1	10 BASE-T compliant *4 number of ports: As required

2. With energy monitoring

(A) Up to 64 indoor units

Device	Model	Quantity	Remarks
Touch Screen Controller	BMS-TP0640PWE	1	
Intelligent Server	BMS-LSV2E	1	
Intelligent Server Software	BMS-STCC01E	1	
TCS-NET Relay Interface	BMS-IFLSV1E	Max. 8	Up to 8 units per Intelligent Server
Energy Monitoring Relay Interface	BMS-IFWH3E	Max. 4	
Digital I/O Relay Interface	BMS-IFDD01E	Max. 4	
Ethernet wire	Procured on site	*1	Category5 UTP straight cable
Switching HUB	Procured on site	1	10 BASE-T compliant *4 number of ports: As required
PC	Procured on site	1	OS: Windows 2000 or later Excel: Excel 2000 or later
Power meter	Procured on site	*5	Pulse output type Pulse generator constants: 1kWh/pulse or 10kWh/pulse Pulse duration: 50 - 1000 ms Output terminal: ON/OFF contactor

(B) Up to 512 indoor units

Device	Model	Quantity	Remarks
Touch Screen Controller	BMS-TP5120PWE	1	
Intelligent Server	BMS-LSV2E	Max. 4	
Intelligent Server Software	BMS-STCC01E	Max. 4	Same quantity as Intelligent Server required
TCS-NET Relay Interface	BMS-IFLSV1E	Max. 32*2	*2 Up to 8 units per Intelligent Server
Energy Monitoring Relay Interface	BMS-IFWH3E	Max. 16*3	*3 Up to 4 units per Intelligent Server
Digital I/O Relay Interface	BMS-IFDD01E	Max. 16*3	*3 Up to 4 units per Intelligent Server
Ethernet wire	Procured on site	*1	Category5 UTP straight cable
Switching HUB	Procured on site	1	10 BASE-T compliant *4 number of ports: As required
PC	Procured on site	1	OS: Windows 2000 or later Excel: Excel 2000 or later
Power meter	Procured on site	*5	Pulse output type Pulse generator constants: 1kWh/pulse or 10kWh/pulse Pulse duration: 50 - 1000 ms Output terminal: ON/OFFcontactor

*1 The number of ethernet wire and the number of switching HUB port vary with the number of Intelligent servers connected.
*4 100BASE-T compliant HUB is required in using 5 or more servers, or 2 or more controllers.
*5 The number of power meters vary with power meter specifications.
- Two or more refirgerant system can be connected to one power meter.
- For heat recovery VRF (SHRM) and “Super digital inverter”, “Digital inverter”, it is necessary to install the power meter independently.
- All power meters connected same controller must be set same pulse generator constants.

3

INSTALLATION

3-1 Installation work flow
3-2 Setup file data preparation
3-2-1 Control wiring diagram (Connection example)
3-2-2 Power meter wiring diagram (Connection example)
3-2-3 Air conditioner address table
3-2-4 Schedule table
3-3 Setup file creation
3-3-1 Setup file creation software (Excel macro)
3-3-2 Setup file contents
3-4 Control system Installation
3-4-1 External view
3-4-2 Installation method
3-4-3 Device specifications
3-5 Wiring
3-5-1 Wiring specifications
3-5-2 Wiring diagram
3-6 Network connection
3-7 Control system configulation

3-1 Installation work flow

Work flow	Contents	Reference No.
0. System planning	Air conditioner equipments selection Control system device selection	Chapter. 2
1. Setup file data preparation	System wiring diagram Power meter wiring diagram Address list Schedule list	3-2
2. Setup file creation	Create setup files by excel macro software	3-3
3. On site installation (Construction work)	Control system installation	3-4
4. On site installation (Wiring)	Wiring power cable/ communication line Network connection	3-5 3-6
5. On site installation (Control system configuration)	Energy monitoring PC configuration Intellignet server configuration Setup file installation	3-7
6. On site installation (Address setting)	Air conditioner address setting Control system device address setting	Chapter. 4
7. Trial operation and adjustment		Chapter. 5
8. Commissioning		

3-2 Setup file data preparation

Before implementation of installing, prepare the materials for creating the setting files.

- Control wiring diagram
- Power meter wiring diagram
- Air conditioner addresstable
- Schedule table

3-2-1 Control wiring diagram (Connection example)

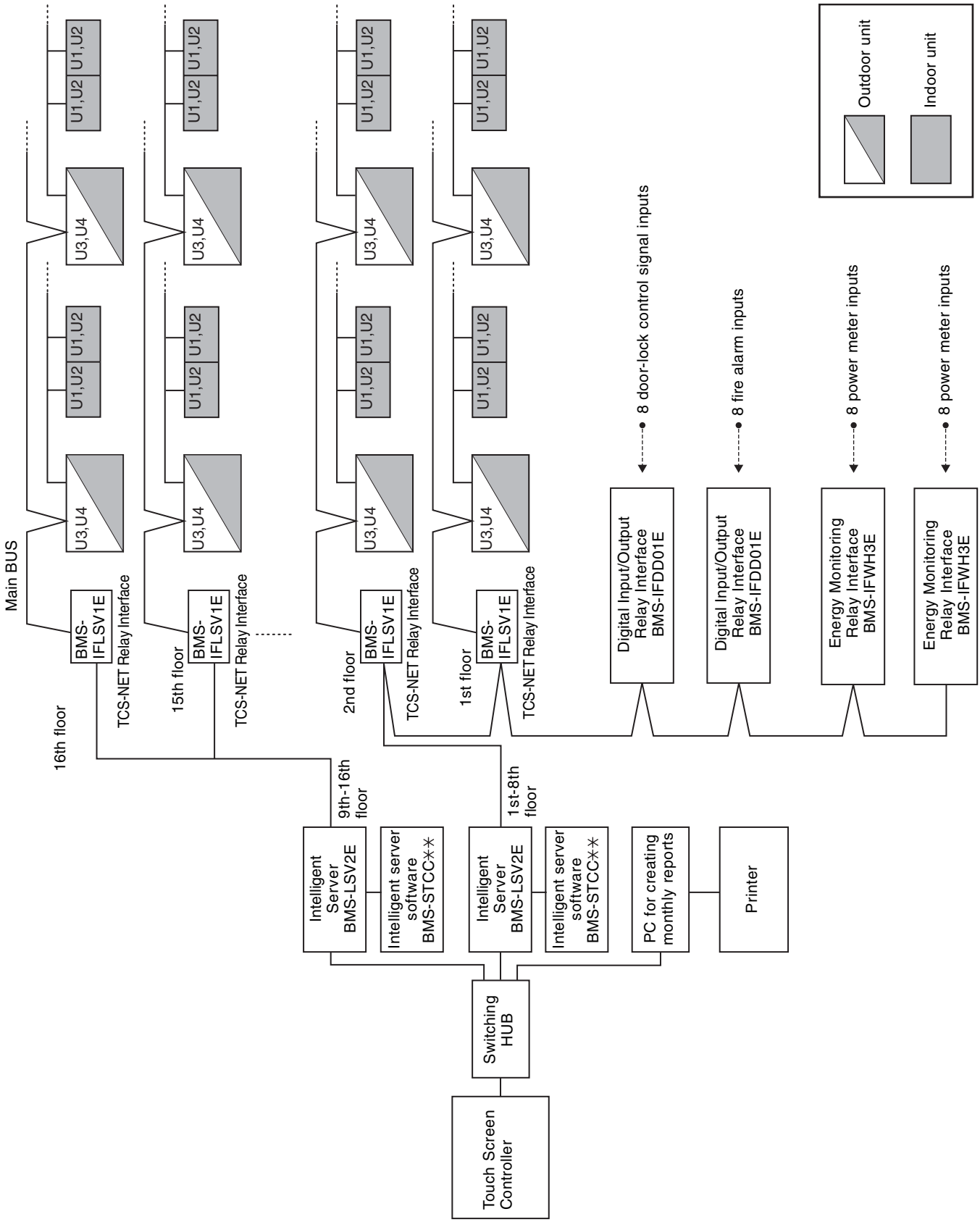

3-2-2 Power meter wiring diagram (Connection example)

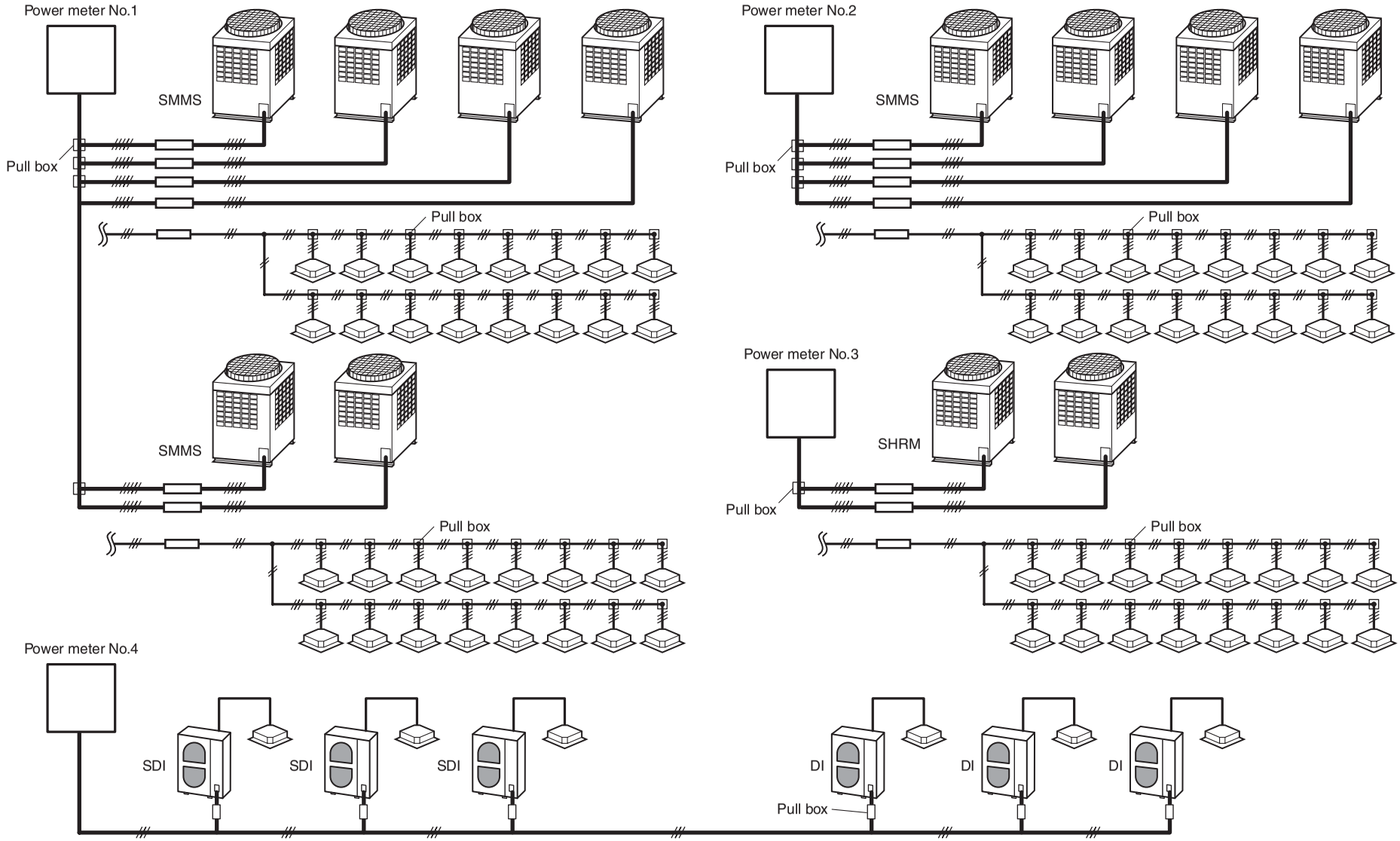

- Two or more refirgerant system can be connected to one power meter.
- For heat recovery VRF (SHRM) and “SDI*1” “DI*2” it is necessary to install the power meter independently.
- All power meters connected same controller must be set same pulse generator constants.

*1: Super digital inverter
*2: Digital inverter

3-2-3 Air conditioner address table

① Intelligent Server address
② TCS-NET relay I/F address
③ Line address
④ Indoor unit address
⑤ Group address

• Building name:

	Air Conditioner List				Address Information					Display name				Power meter No. and Input/Output data No.		
	Outdoor refrigerant system	Outdoor unit model name	Indoor unit model name	Header unit	①	②	③	④	⑤	Block name	Tenant name	Area name	R.C. group/ unit	Power meter No.	Key input No.	Fire alarm No.
1																
2																
3																
4																
5																
6																
7																
8																
9																
10																
11																
15																
16																
17																
18																
19																
20																

1	Header indoor unit of group control Indoor unit on individual control
0	Follower indoor unit of group control

(Example)

• Building name: XXX Building

① Intelligent Server address
② TCS-NET relay I/F address
③ Line address
④ Indoor unit address
⑤ Group address

	Air Conditioner List				Address Information					Display name				Power meter No. and Input/Output data No.		
	Outdoor refrigerant system	Outdoor unit model name	Indoor unit model name	Header unit	①	②	③	④	⑤	Block name	Tenant name	Area name	R.C. group/ unit	Power meter No.	Key input No.	Fire alarm No.
1	PAC-B	MMY-AP1401HT8	MMU-AP0091H	1	1	1	1	1	1	1F	Tenant A	Shop A	PAC-B•1F-1	1	1	1
2			MMU-AP0091H	0				2	2	1F	Tenant A	Shop A	PAC-B•1F-1	1	1	1
3			MMU-AP0091H	0				3	2	1F	Tenant A	Shop A	PAC-B•1F-1	1	1	1
4			MMU-AP0091H	0				4	2	1F	Tenant A	Shop A	PAC-B•1F-1	1	1	1
5			MMU-AP0091H	0				5	2	1F	Tenant A	Shop A	PAC-B•1F-1	1	1	1
6			MMK-AP0091H	1				6	0	1F	Tenant B	Shop B	PAC-B•1F-2	1	1	1
7			MMK-AP0091H	1				7	0	1F	Tenant B	Shop C	PAC-B•1F-3	1	1	1
8			MMK-AP0091H	1				8	0	1F	Tenant B	Shop D	PAC-B•1F-4	1	1	1
9			MMK-AP0091H	1				9	0	1F	Tenant B	Shop E	PAC-B•1F-5	1	1	1
10	PAC-M	MMY-AP1401HT8	MMK-AP0091H	1	1	1	2	1	0	1F	Tenant C	Shop F	PAC-M•1F-1	2	1	1
11			MMK-AP0091H	1				2	0	1F	Tenant C	Shop F	PAC-M•1F-2	2	1	1
12			MMK-AP0091H	1				3	0	1F	Tenant C	Shop G	PAC-M•1F-3	2	1	1
13			MMK-AP0091H	1				4	0	1F	Tenant C	Shop G	PAC-M•1F-4	2	1	1
14			MMK-AP0091H	1				5	0	1F	Office A	Office	PAC-M•1F-5	2	1	1
15			MMK-AP0091H	1				6	0	1F	Office A	Office	PAC-M•1F-6	2	1	1
16			MMK-AP0091H	1				7	0	1F	Office A	Meeting room	PAC-M•1F-7	2	1	1
17			MMK-AP0091H	1				8	0	1F	Office A	Meeting room	PAC-M•1F-8	2	1	1
18	PAC-S	MMY-AP1401HT8	MMK-AP0091H	1	1	1	3	1	1	2F	Shared space	A	PAC-S•2F-1	3	2	2
19			MMK-AP0091H	0				2	2	2F		B		3	2	2
20			MMK-AP0091H	1				3	0	2F	Tenant D	Shop H	PAC-S•2F-2	3	2	2

1	Header indoor unit of group control Indoor unit on individual control
0	Follower indoor unit of group control

3-2-4 Schedule table

Schedule Table (/)

• Building name:

R.C. group/unit						
Area						
Tenant						
Block						
Day of the week						
1	:		:		:	
2	:		:		:	
3	:		:		:	
4	:		:		:	
5	:		:		:	
6	:				:	
7					.	
8						

Schedule Table (Example)

• Building name: XXX Building

R.C. group/unit	PAC-B, 1F-1		PAC-B, 1F-3 to 1F-5		PAC-B, 1F-6	
Area	Consultation room		Warehouse			
Tenant	XX Dental Clinic		XX Electric Co., Ltd.		Night-duty room	
Block	B1		B1		B1	
Day of the week	Monday to Saturday		Monday to Friday		Monday to Saturday	
1	8:00	Run	8:00	Run	8:00	Run
2	19:00	Stop	12:00	Stop	9:30	Stop
3	21:00	Stop	13:00	Run	10:00	Stop
4	:		19:00	Stop	16:30	Run
5	:		21:00	Stop	22:00	Stop
6	:		.		23:58	Stop
7					.	
8						

3-3 Setup file creation

Create setup files according to the control wiring system diagram and the address table.

3-3-1 Setup file creation software (Excel macro)

- The setup file creation software is used to create setup files installed in the Touch Screen Controller.
- In the air conditioning control system, setting values are defined in accordance with air conditioner installation conditions in a building. If wrong value is set, a problem such as interruption in communication with air conditioners will occur.
- Setting items: Air conditioner information, device information, Touch Screen Controller display information.
- An operator enters information in Excel spreadsheets, and then creates 23 setup files using the entered information.

Operating environment and others

Operating environment	OS	Windows 2000 or later
	Excel	Excel 2000 or later is required separately.

System Configuration

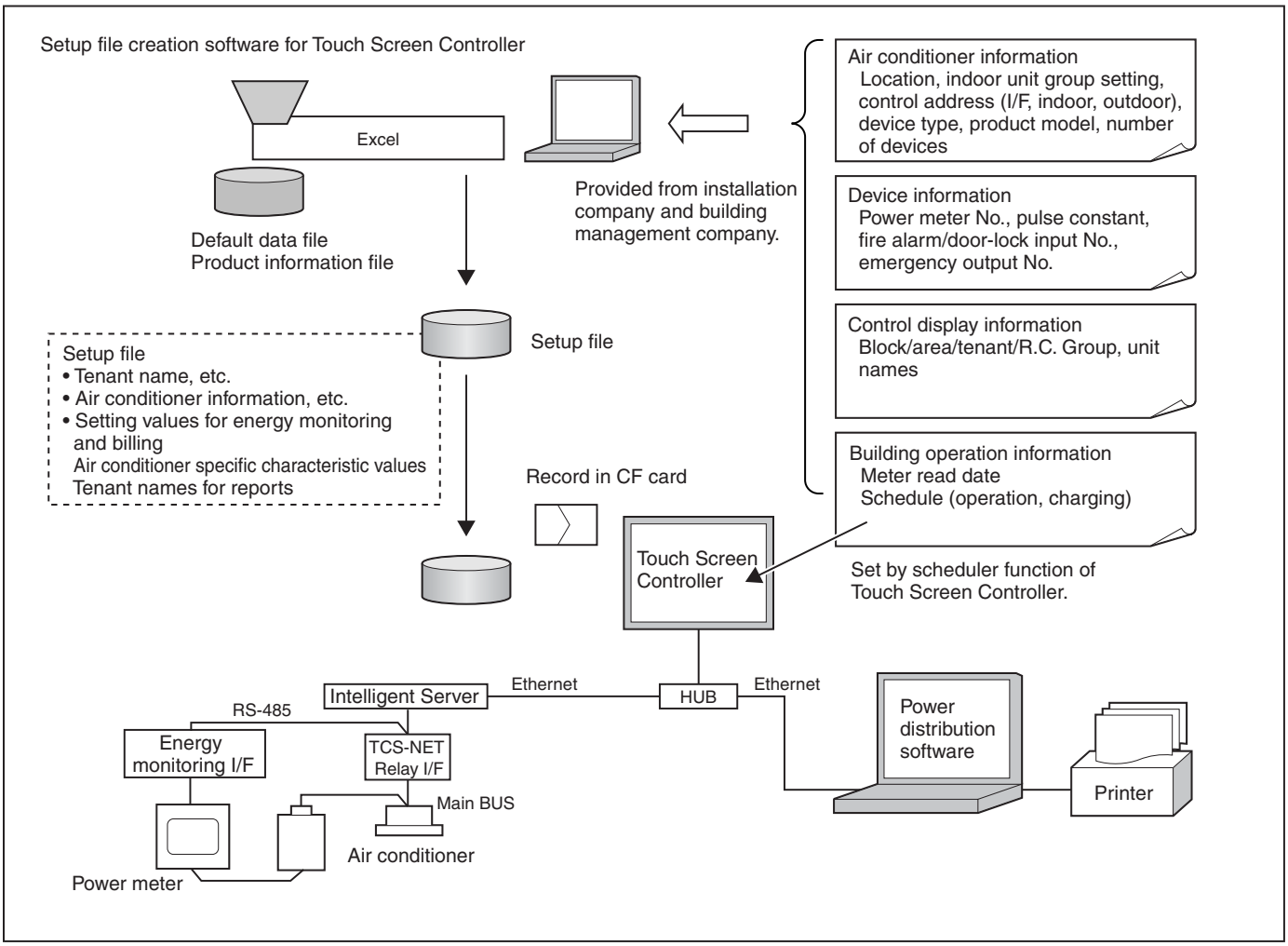

3-3-2 Setup file contents

(1) Display setup file

- File name: DISP_FORM.DEF
- Enter entire building display mode, number of block display buttons, number of tenant display buttons, number of area display buttons, number of R.C. group/indoor display buttons, and schedule setting unit.
- For the entire building display mode, specify display unit when the entire building button is pressed. [0: block, 1: tenant, 2: area, 3: R.C. group/indoor]
- For the number of buttons, enter the number of lateral buttons in each display mode. The number of vertically arranged buttons is always 6.
- Specify schedule setting unit. [0: area, 1: R.C. group/indoor]
- Specify filter sign display mode. [0: not display, 1: display]

(2) Error code definition file

- File name: ERROR_CODE.DEF
- Enter reception code (hexadecimal), error code, error code name, display mode, and external output.
- Specify display mode [0: not display (normal), 1: display].
- Specify external output [0: not output emergency, 1-64: emergency output No. (output to corresponding number)].

(3) Touch Screen Controller IP address definition file

- File name: CONT_IP.DEF
- Enter the Touch Screen Controller IP address.

(4) Intelligent Server IP address definition file

- File name: LSV_IP.DEF
- Enter an Intelligent Server number and IP address.

(5) I/O Controller IP address definition file

- File name: IO_IP.DEF
- Enter the I/O Controller IP address.
- Only one address can be entered. Do not enter any IP address when the I/O Controller is not used.

(6) Building name definition file

- File name: BUILD_NAME.DEF
- Enter a building name.

(7) Block name definition file

- File name: BLOCK_NAME.DEF
- Enter a block number/name, and font size.
- Specify font size. [0 (small) -3 (large), 2: standard]

(8) Tenant name definition file

- File name: TENANT_NAME.DEF
- Enter tenant numbers/names (up to 512), and font size.
- Specify font size. [0 (small) -3 (large), 2: standard]

(9) Area name definition file

- File name: AREA_NAME.DEF
- Enter area numbers/names (up to 512), and font size.
- Specify font size. [0 (small) -3 (large), 2: standard].

(10) R.C. group/indoor name definition file

- File name: AC_NAME.DEF
- Enter R.C. group/indoor numbers/names (up to 512), and font size.
- Specify font size. [0 (small) -3 (large), 2: standard]

(11) Door-lock input definition file

- File name: KEY_CH.DEF
- Enter door-lock input numbers (1-64), input device IDs, input channels, and signal logic (up to 64).
- When no door-lock input is used, do not enter it.
- An input device ID means the following:
  0 to 7: I/O module device ID
  10: general-purpose input in the touch panel
  100 or more: digital I/O interface (Second digit: Intelligent Server No., first digit: Relay Interface No.)
- Specify signal logic. [0: negative logic, 1: positive logic]

(12) Fire alarm input definition file

- File name: FIRE_CH.DEF
- Enter fire alarm input numbers (1-64), input device IDs, input channels, and signal logic (up to 64).
- When no fire alarm input is used, do not enter it.
- An input device ID means the following:
  0 to 7: I/O module device ID
  10: general-purpose input in the touch panel
  100 or more: digital I/O interface (Second digit: Intelligent Server No., first digit: Relay Interface No.)
- Specify signal logic. [0: negative logic, 1: positive logic]

(13) Emergency external output definition file

- File name: EMGOUT_CH.DEF
- Enter external emergency output numbers (1-64), output device IDs, and output channels (up to 64).
- When no external emergency output is used, do not enter it.
- An output device ID means the following:
  0 to 7: I/O module device ID
  20: general-purpose output in the touch panel
  100 or more: digital I/O interface (Second digit: Intelligent Server No., first digit: Relay Interface No.)

(14) R.C. group/indoor setup file

- File name: AC_MAP.DEF
- R.C. group/indoor No., Intelligent Server No., Relay Interface No., outdoor system No., indoor unit address, device type, block No., tenant No., area No., key No., fire alarm No.
- Device type
  0: SMMS, SHRM, 1: SDI, DI, 2: HA interface
- Key No.
  0: no door-lock interlocking, 1-64: When a signal is input from the number defined in (11), stop command is sent to the system.
- Fire alarm No.
  0: no fire alarm interlocking, 1-64: When a signal is input from the number defined in (12), stop command is sent to the system.
- Indoor unit set in this file is header unit only.

(15) Indoor unit group config file

- File name: AC_GROUP.DEF
- R.C. group/indoor No., Intelligent Server No., Relay Interface No., outdoor system No., indoor unit address, device type, outdoor unit No., header/follower, tenant No.
- Used for energy monitoring and billing. No data is provided when energy monitoring and billing is not performed.

(16) Outdoor unit group config file

- File name: OUT_GROUP.DEF
- Outdoor unit No., Intelligent Server No., Relay Interface No., system No., outdoor unit address, device type
- Used for energy monitoring and billing. No data is provided when energy monitoring and billing is not performed.

(17) Power meter input definition file

- File name: WHM_CH.DEF
- Power meter No. (1-64), interface address, channel No., pulse generator constants
- Used for energy monitoring and billing. No data is provided when energy monitoring and billing is not performed.
- An interface address means the following:
  1 to 31: energy monitoring interface
  100 or more: pulse counter interface (Second digit: Intelligent Server No., first digit: Relay Interface No.)
- Pulse generator constants (kWh/pulse): Used by the energy monitoring and billing Excel macro, but not used by the controller.

(18) Report setup file

- File name: REPORT.DEF
- Daily report limit time (meter-read time), Monthly report limit date

(19) Operation mode setup file

- File name: RUN_MODE.DEF
- Operation mode range, scheduled operation central setting, door-lock interlocking central setting
- Operation mode range 0: all enabled, 16: cooling/dry/blowing, 32: heating/blowing
- Scheduled operation central setting

Setting	Stop (10 minutes later)	Stop (within 10 minutes)	Run
0	Stop	Stop	Run
1	Stop + “run/stop” changeover prohibition reset	Stop + “run/stop” changeover prohibition reset	Run + “run/stop” changeover prohibition reset
2	Stop + “run/stop” changeover prohibition reset	Stop + “run/stop” changeover prohibited	“Run/stop” changeover prohibition reset
3	Stop + “run/stop” changeover prohibition reset	Stop + “run/stop” changeover prohibited	Run + “run/stop” changeover prohibition reset

- Door-lock interlocking central setting

Setting	Lock (OFF to ON)	Unlock (ON to OFF)
0	Stop	No operation
1	Stop	“Run/stop” changeover prohibition reset
2	Stop + “run/stop” changeover prohibited	“Run/stop” changeover prohibition reset
3	Stop	No operation

* All these files must be included in “¥DEF” folder.

3-4 Control system installation

3-4-1 External view

Touch Screen Controller

Model: BMS-TP0640ACE
BMS-TP5120ACE
BMS-TP0604PWE
BMS-TP5120PWE

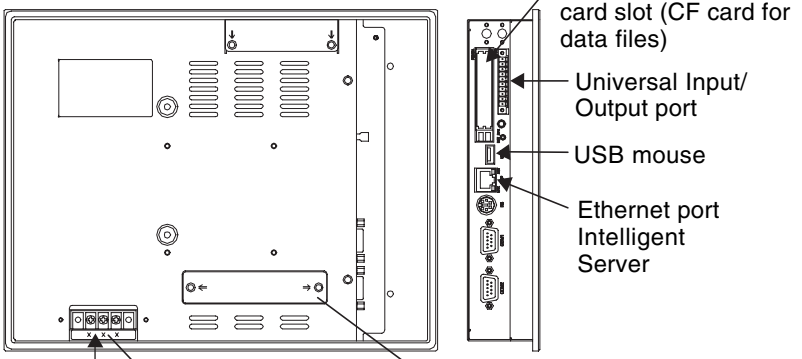

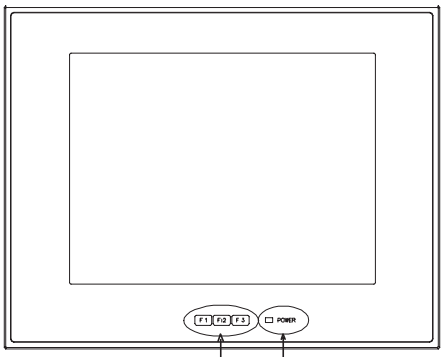

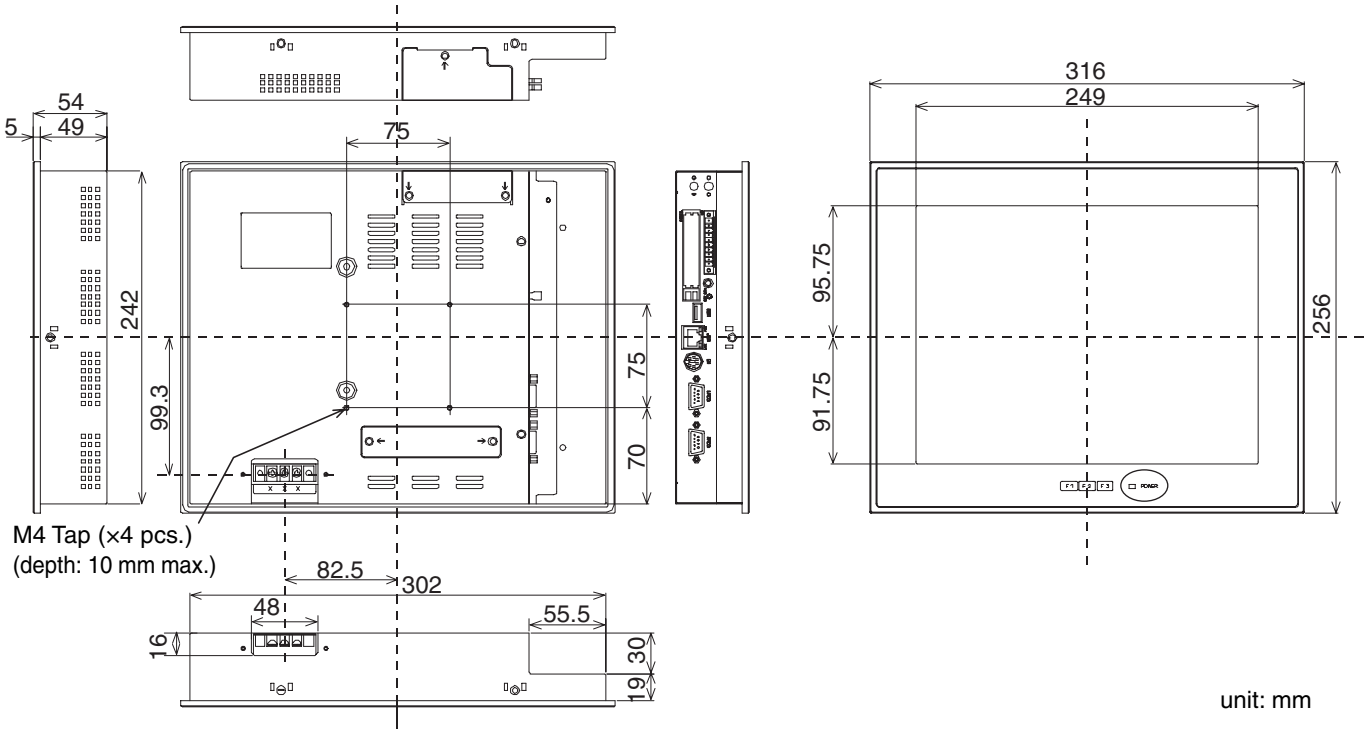

Intelligent Server

Model: BMS-LSV2E

Metal case type

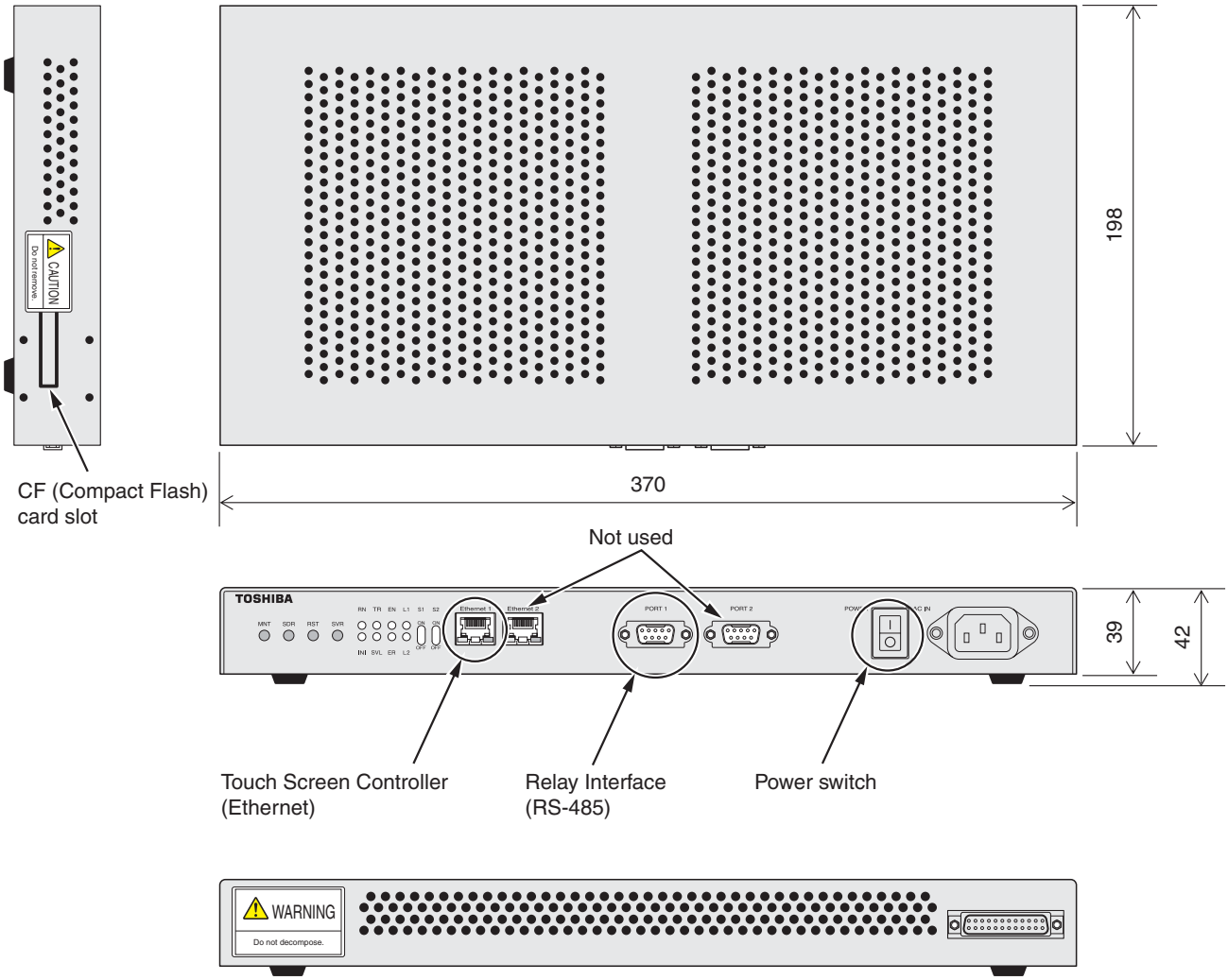

unit: mm

TCS-NET Relay Interface

Model: BMS-IFLSV1E

	Parts name	Specifications
1	Case	Galvanized sheet metal
2	Case lid	Galvanized sheet metal
3	Grommet	C30-SG20A
4	Grommet	C30-SG20A
5	Grommet for power supply	C30-SG20A

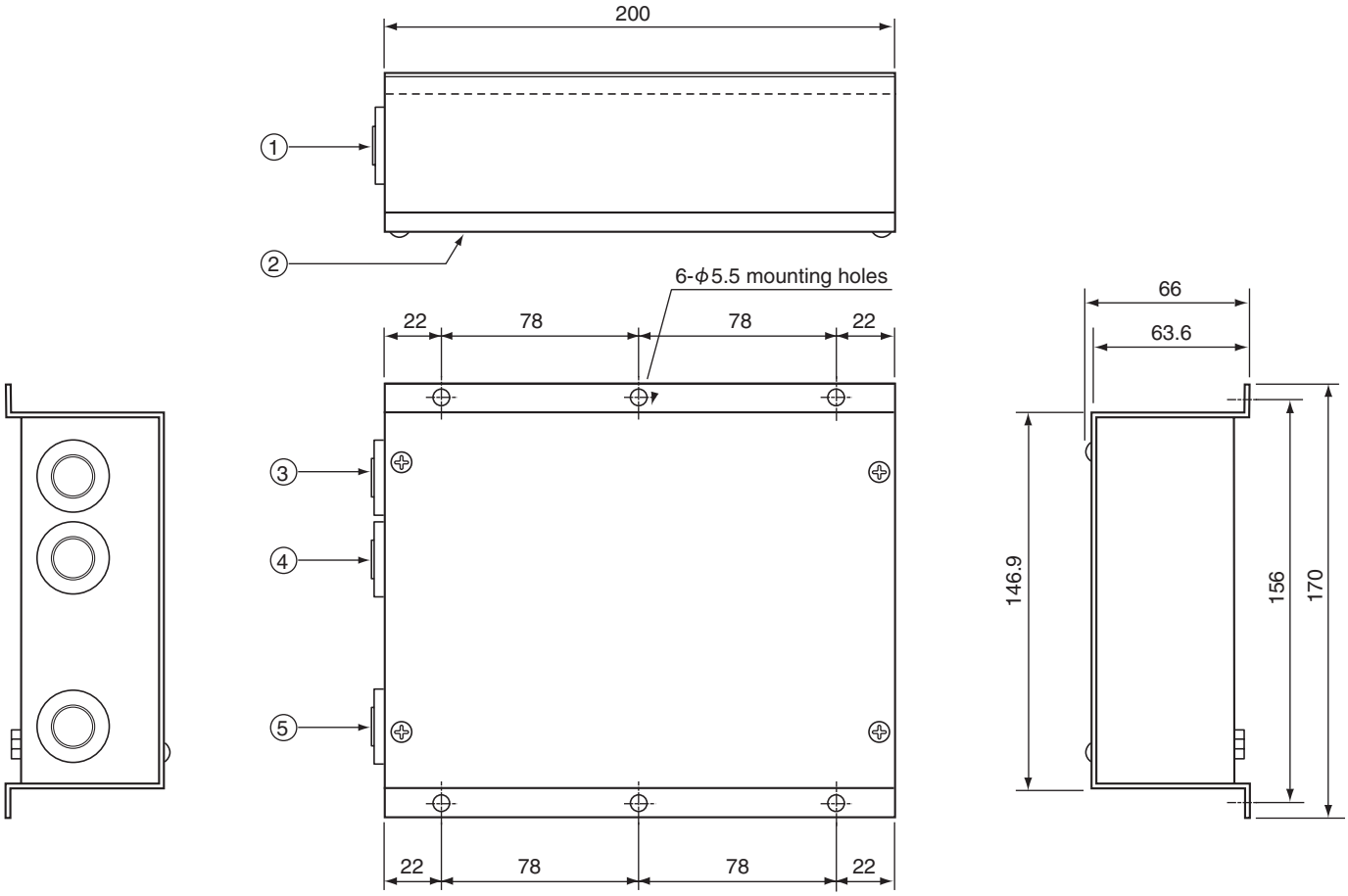

unit: mm

Energy monitoring R I/F • Digital I/O R I/F

Model: BMS-IFWH3E
BMS-IFDD01E

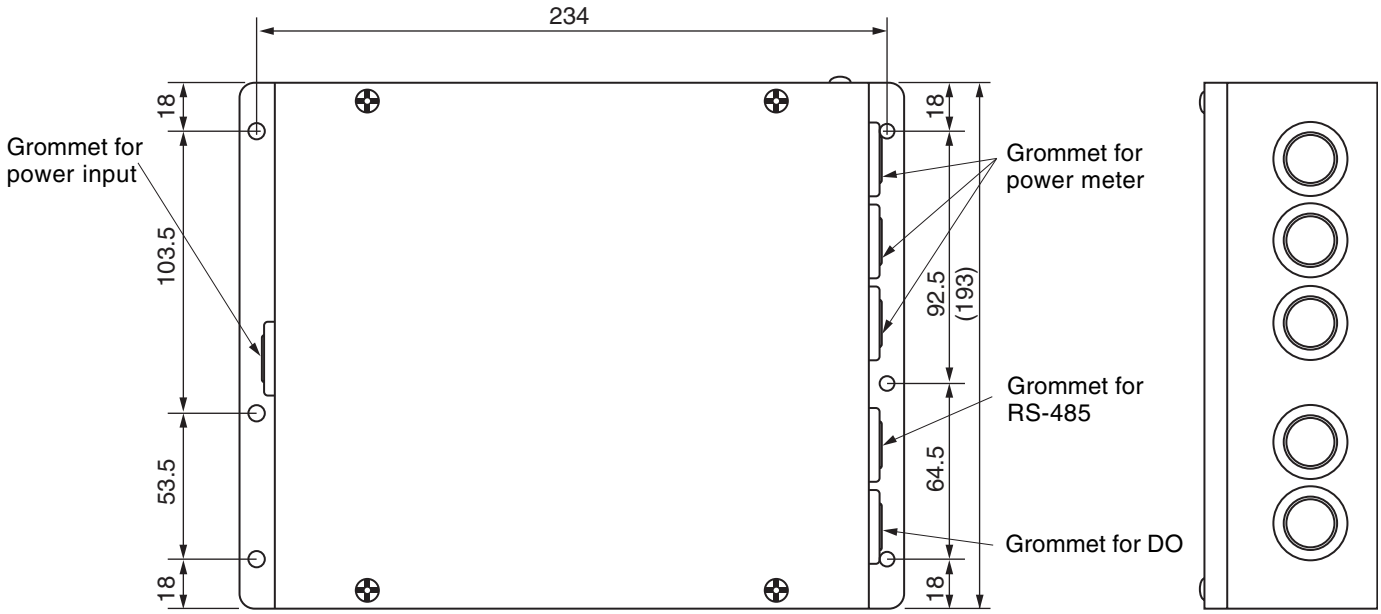

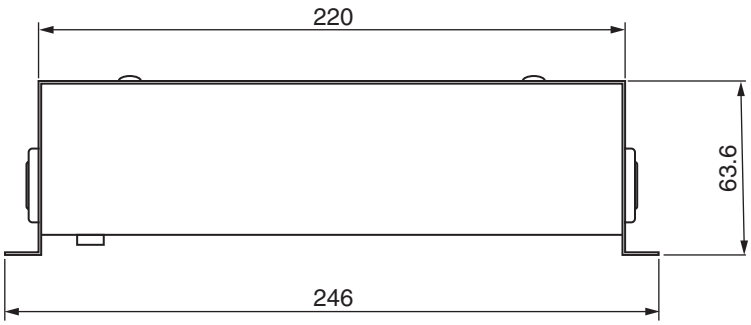

unit: mm

3-4-2 Installation method

Touch Screen Controller

Make space for installation and service.
Install the Touch Screen Controller in a wall (standard) or on the dedicated stand (when available on site).

In-wall installation

■Conditions for installation

Space 30 mm or more between the controller and surrounding objects as the ambient temperature must satisfy the installation space requirements.

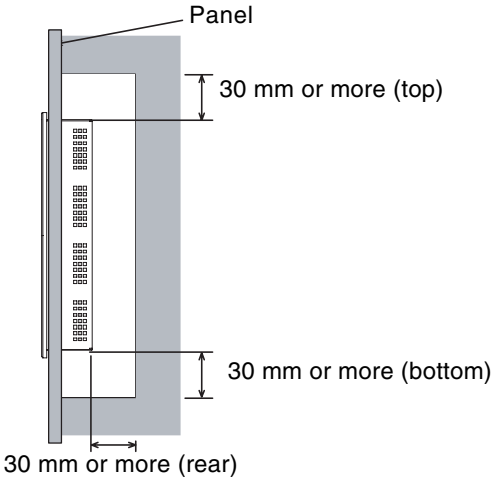

Top view

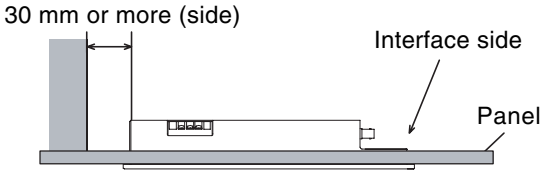

Bottom view

■Attaching Fixture

■Panel cut size

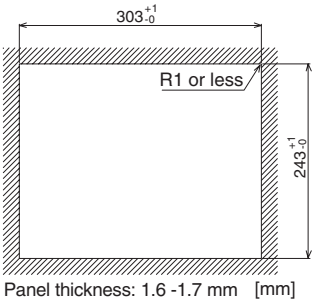

REQUIREMENT

Use a panel (procured on site) of thickness 1.6-1.7 mm.

1. Insert the controller from outside of the panel.

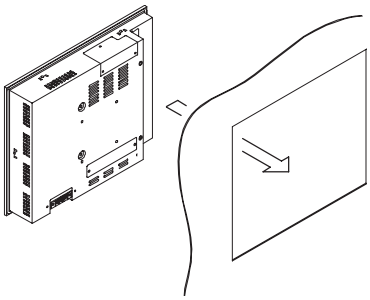

2. Insert the fixtures from inside of the panel.

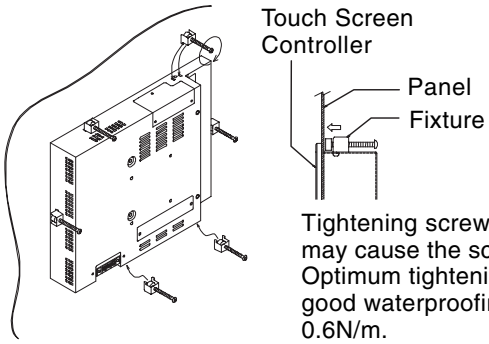

Tightening screws excessively may cause the screws to break. Optimum tightening torque for good waterproofing effect is 0.6N/m.

For reference

Display stand (not supplied with the controller)

Use the CONTEC stand (model: IPC-SND-03).
For details of the stand, visit the CONTEC web site.
Europe: http://www.contec-europe.com/
China: http://www.contec.sh.cn/

REQUIREMENT

- Check that the installation dimensions on the rear of the Touch Screen Controller equal the installation dimensions of the CONTEC stand.
- Use the screws supplied with the stand to install the controller.

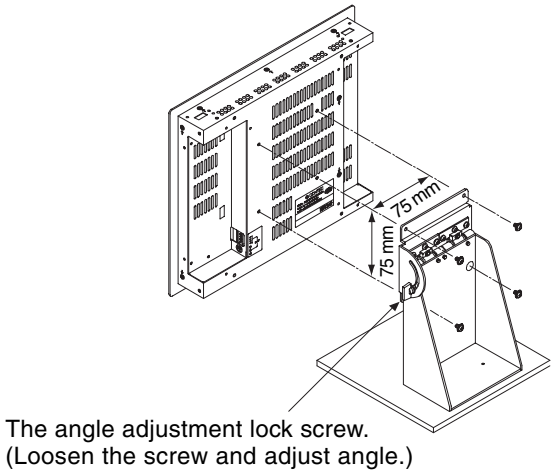

Intelligent Server Installation Method and Orientation

There are four ways to install the Intelligent Server as shown below: (1) rack mount (2) surface mount (3) wall mount A, and (4) wall mount B. The rack mount installation requires a support bracket for a 19-inch rack. Please contact us if you need the support bracket.
Use the four bottom screw holes for the wall mount installation.

(1) Rack mount
A support bracket is required to be fixed to the bottom (rear side) of the unit.

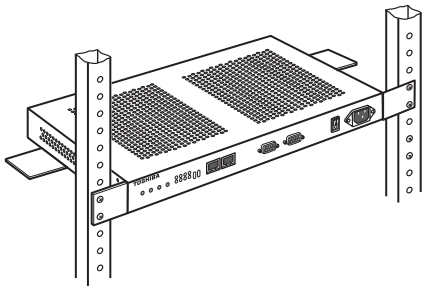

(2) Surface mount
Standard installation

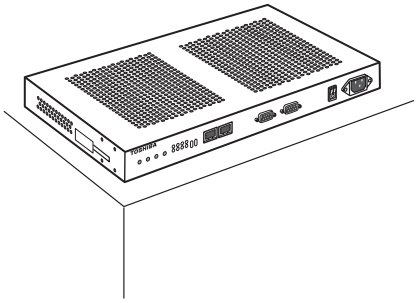

(3) Wall mount -A
Wall mount with the front side upward

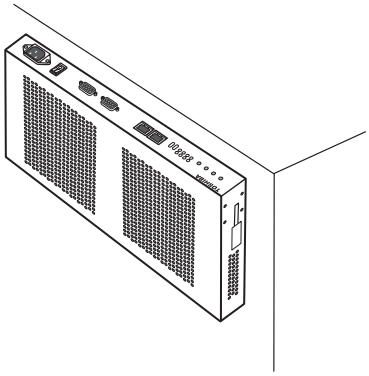

(4) Wall mount -B
Wall mount with the left side upward

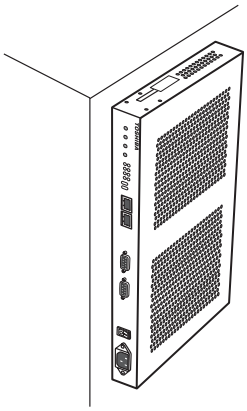

(Unit: mm)

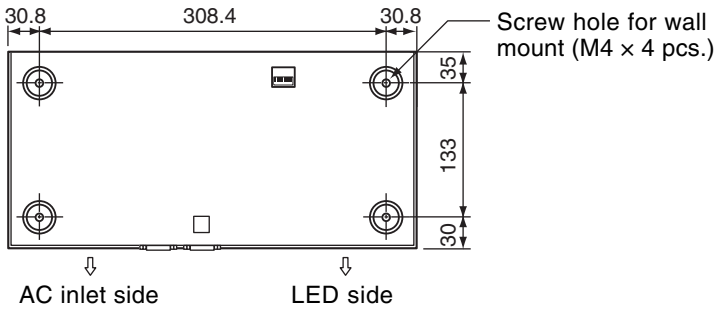

REQUIREMENT

Do not install the unit in any of the following places.
- Humid or wet place
- Dusty place
- Place exposed to direct sunlight
- Place where there is a TV set or radio within one meter
- Place exposed to rain (outdoors, under eaves, etc.)

TCS-NET Relay Interface

■Installation Method and Orientation

There are five installation methods for this relay interface as shown below: surface mount and wall mounts. Use the attached screws.

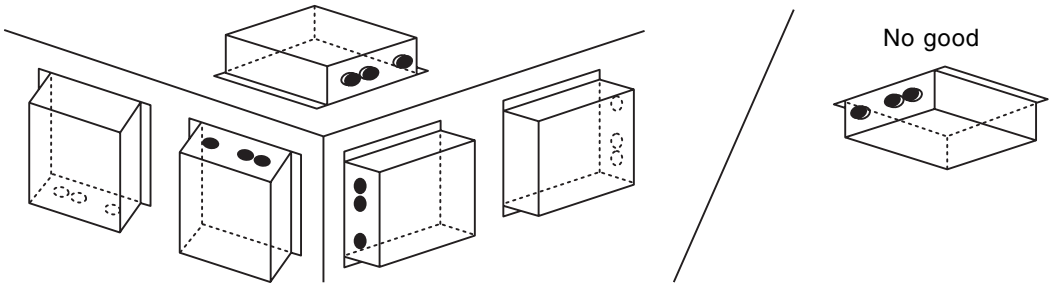

REQUIREMENT

Do not install the unit in any of the following places.

- Humid or wet place
- Dusty place
- Place exposed to direct sunlight
- Place where there is a TV set or radio within one meter
- Place exposed to rain (outdoors, under eaves, etc.)

■Installation Space and Maintenance Space

A side space for connecting through cable inlets and an upper space for maintenance must be reserved before installation.
The other sides can be adjacent to surrounding objects.

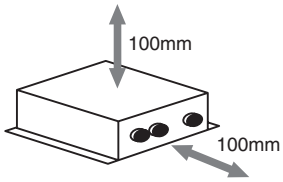

Energy monitoring R I/F • Digital I/O R I/F

■Installation Method and Orientation

There are five installation methods for this relay interface as shown below: surface mount and wall mounts. Use the attached screws.

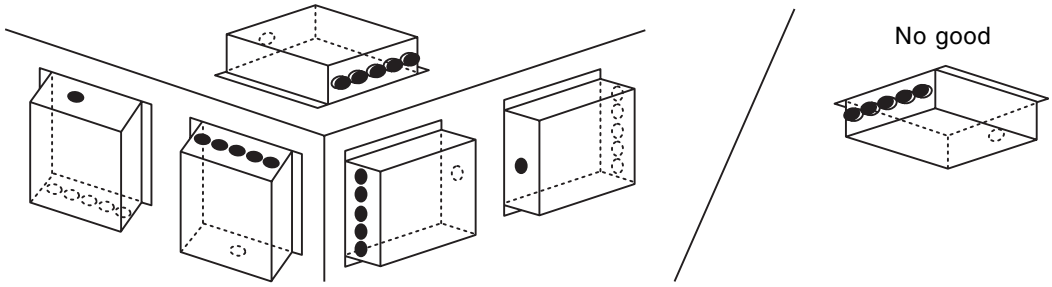

REQUIREMENT

Do not install the unit in any of the following places.

- Humid or wet place
- Dusty place
- Place exposed to direct sunlight
- Place where there is a TV set or radio within one meter
- Place exposed to rain (outdoors, under eaves, etc.)

■Installation Space and Maintenance Space

A side space for connecting through cable inlets and an upper space for maintenance must be reserved before installation.
The other sides can be adjacent to surrounding objects.

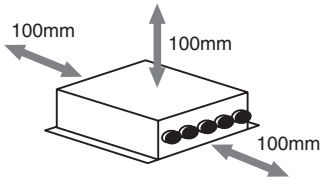

3-4-3 Device specifications

Touch Screen Controller

Device, model	Item	Specification
Touch Screen Controller BMS-TP0640ACE BMS-TP5120ACE BMS-TP0640PWE BMS-TP5120PWE	Power supply	100 - 240 V, AC 50/60 Hz
	Power consumption	50 VA
	Outside dimensions	316 (W) x 256 (H) x 54 (D) mm
	Weight	3.5 kg
	Ambient temperature	0 to 40 °C
	Ambient humidity	20 to 85%RH

Intelligent Server

Device, model	Item	Specification
Intelligent Server BMS-LSV2E	Power supply	85 - 132 V, 180 - 264 V, AC 50/60 Hz
	Power consumption	30 VA
	Outside dimensions	370 (W) x 42 (H) x 198 (D) mm
	Weight	2.5 kg
	Ambient temperature	0 to 40 °C
	Ambient humidity	10 to 90%RH

Relay Interface

Device, model	Item	Specification
TCS-NET Relay Interface BMS-IFLSV1E	Power supply	220 - 240 V, AC 50/60 Hz
	Power consumption	2.4 W
	Outside dimensions	170 (W) x 66 (H) x 200 (D) mm
	Weight	1 kg
	Ambient temperature	0 to 40 °C
	Ambient humidity	10 to 90%RH (no condensation)
	Chassis material	Galvanized sheet metal 0.8t (no coating)

Energy Monitoring Interface

Device, model	Item	Specification
Energy monitoring Relay Interface BMS-IFWH3E	Power supply	220 - 240 V, AC 50/60 Hz
	Power consumption	2.8 W (Energy monitoring)
	Outside dimensions	193 (W) x 66 (H) x 246 (D) mm
	Weight	1.65 kg
	Ambient temperature	0 to 40 °C
	Ambient humidity	10 to 90%RH
	Chassis material	Galvanized sheet metal 0.8t

Digital I/O Interface

Device, model	Item	Specification
Digital I/O Relay Interface BMS-IFDD01E	Power supply	220 - 240 V, AC 50/60 Hz
	Power consumption	6.5 W
	Outside dimensions	193 (W) x 66 (H) x 246 (D) mm
	Weight	1.65 kg
	Ambient temperature	0 to 40 °C
	Ambient humidity	10 to 90%RH
	Chassis material	Galvanized sheet metal 0.8t (no coating)

3-5 Wiring

3-5-1 Wiring specifications

Power supply specifications

Device	Input voltage	Power consumption	Power cable wire size	Remarks
Touch Screen Controller	100 - 240 V, AC 50/60 Hz	50 VA	0.75 mm^2	Procure on site
Intelligent Server	85 - 132 V, AC 50/60 Hz 180 - 264 V, AC 50/60 Hz	30 VA		
TCS-NET Relay Interface	220 - 240 V, AC 50/60 Hz	2.4 W		
Energy Monitoring Relay Interface		2.8 W		
Digital I/O Relay Interface		6.5 W		

Communication wiring specifications

Inter-device connection	Control wiring specifications	Number of cores	Diameter (mm^2)	Length (m)	Polarity	Remarks
Intelligent Server ↔ TCS-NET Relay Interface	D-sub (9-pin) wire *1	4		Max. 500	With polarity	Supplied with Intelligent Server software
	(If length is short) Use a shield wire	2	1.25mm^2			Procure on site
Intelligent Server ↔ Energy Monitoring Relay Interface	Shield wire	2	1.25mm^2	Max. 500	With polarity	Procure on site
Intelligent Server ↔ Digital I/O Relay Interface	Shield wire	2	1.25mm^2	Max. 500	With polarity	Procure on site
TCS-NET Relay Interface ↔ Air conditioner	Shield wire	2	1.25mm^2	Max.1000*2	No polarity	Procure on site
	Shield wire	2	2.0mm^2	Max.2000*2	No polarity	Procure on site
Energy Monitoring Relay Interface ↔ Power Meter		2	0.3mm^2	Max. 100	No polarity	Procure on site
Digital I/O Relay Interface ↔ Digital Input/Output		2	0.3mm^2	Max. 100	With polarity	Procure on site

*1: Use the D-sub (9 pin) wire supplied with the Intelligent Server software. If its length is short, use a shield wire.
*2: Total length per TCS-NET Relay Interface

Ethernet wire specifications

When Switching HUB is not used

Inter-device connection	Control wiring specifications	Number of cores	Diameter (mm^2)	Length (m)	Polarity	Remarks
Touch Screen Controller ↔ Intelligent Server	Ethernet (cross) Category 5 UTP cross wire	8	–	Max. 100	–	Procure on site

When Switching HUB is used

Inter-device connection	Control wiring specifications	Number of cores	Diameter (mm^2)	Length (m)	Polarity	Remarks
Touch Screen Controller ↔ Switching HUB	Ethernet (straight) Category 5 UTP straight wire	8	–	Max. 100	–	Procure on site
Switching HUB ↔ Intelligent Server	Ethernet (straight) Category 5 UTP straight wire	8	–	Max. 100	–	Procure on site

3-5-2 Wiring diagram

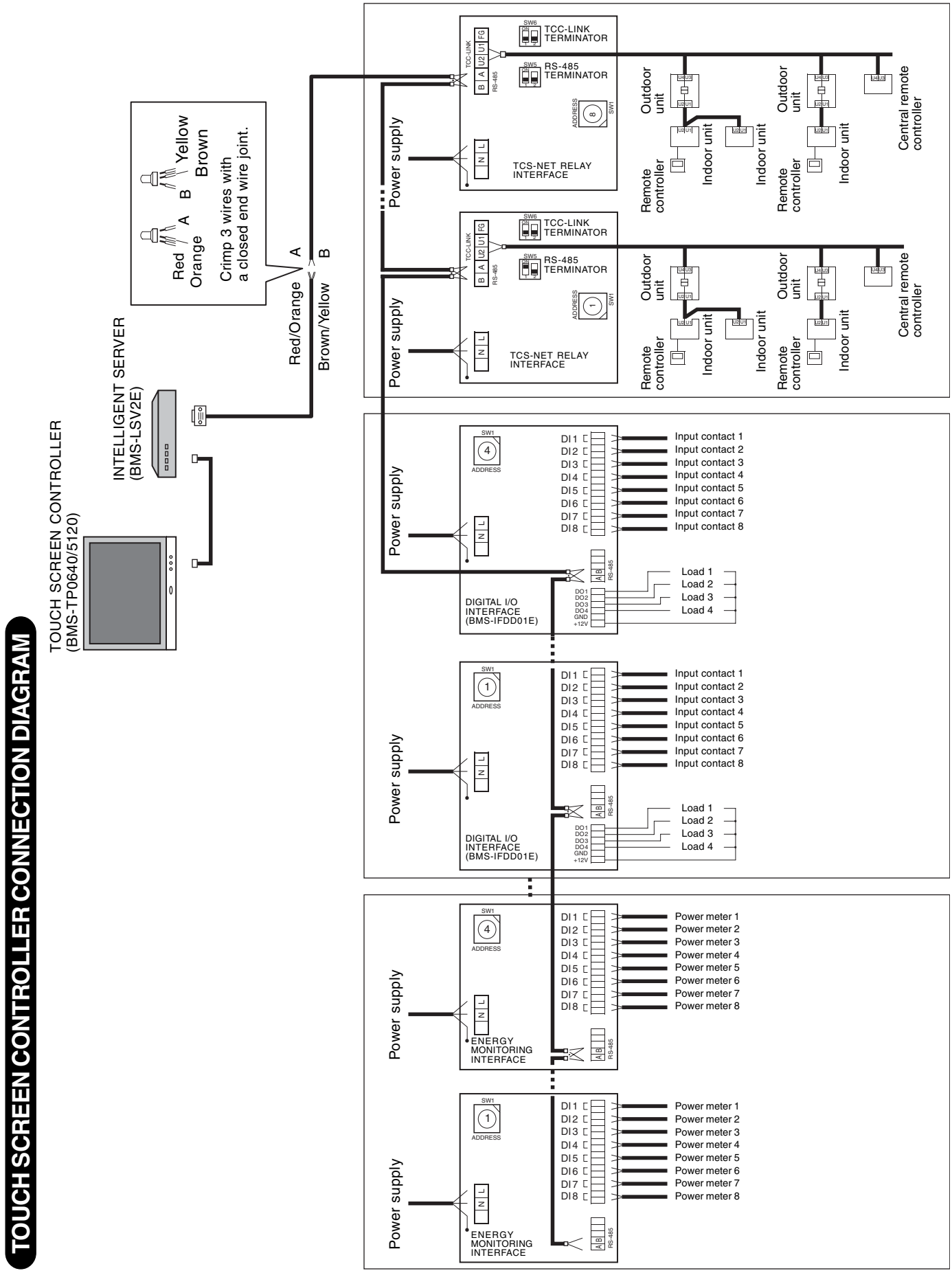

Connections (TCS-NET RELAY INTERFACE (BMS-IFLSV1E)

Connect power cables, earth wires, and signal cables to the specified terminals on the terminal block.

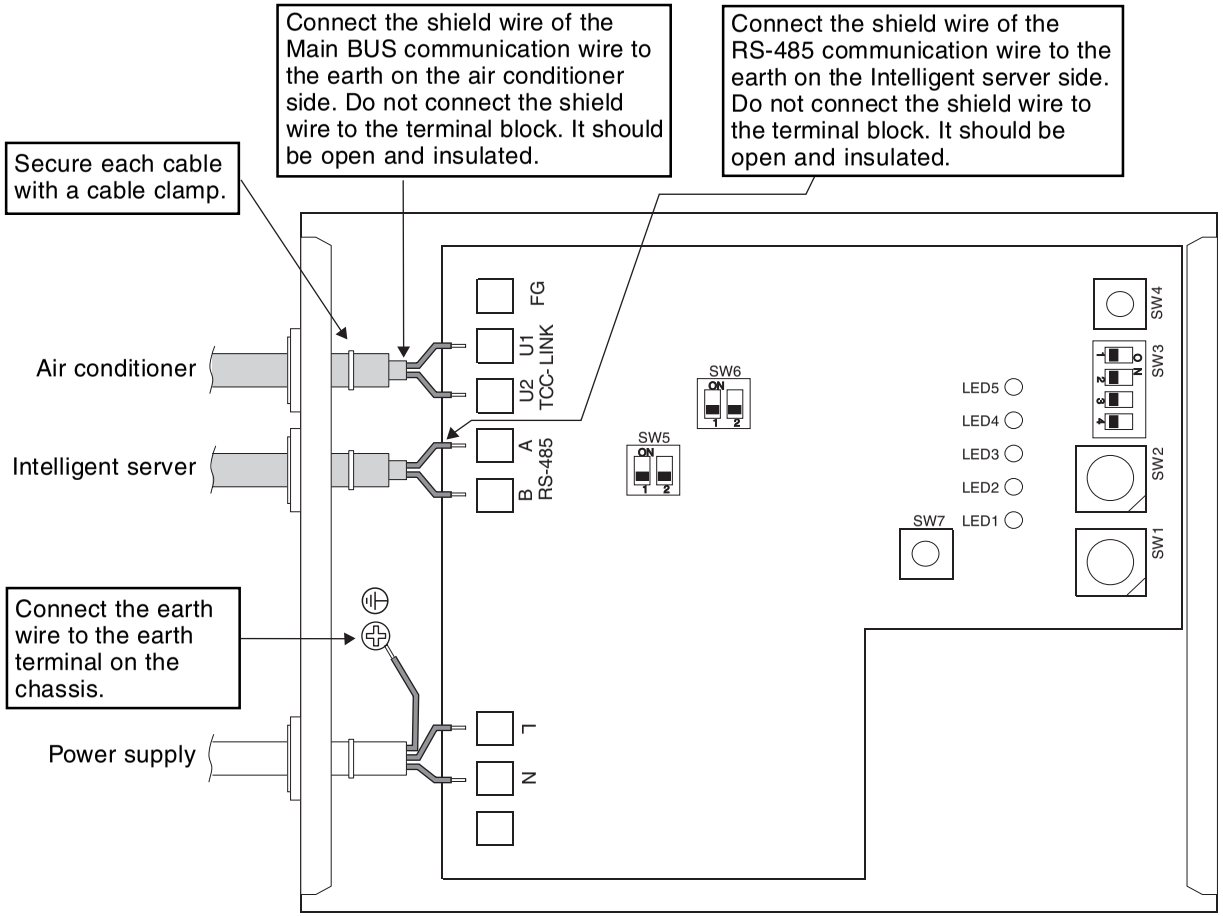

Length of stripped power cable

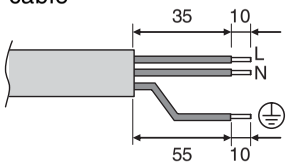

Length of stripped RS-485 communication wire

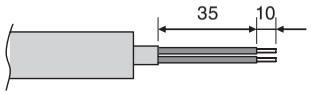

⚠ CAUTION

- The RS-485 signal lines have polarity. Connect A to A, and B to B. If connected with incorrect polarity, the unit will not work.
- The Main BUS signal lines have no polarity.

REQUIREMENT

Install a breaker at the primary side of the power supply.

Connection diagram (TCS-NET RELAY INTERFACE (BMS-IFLSV1E))

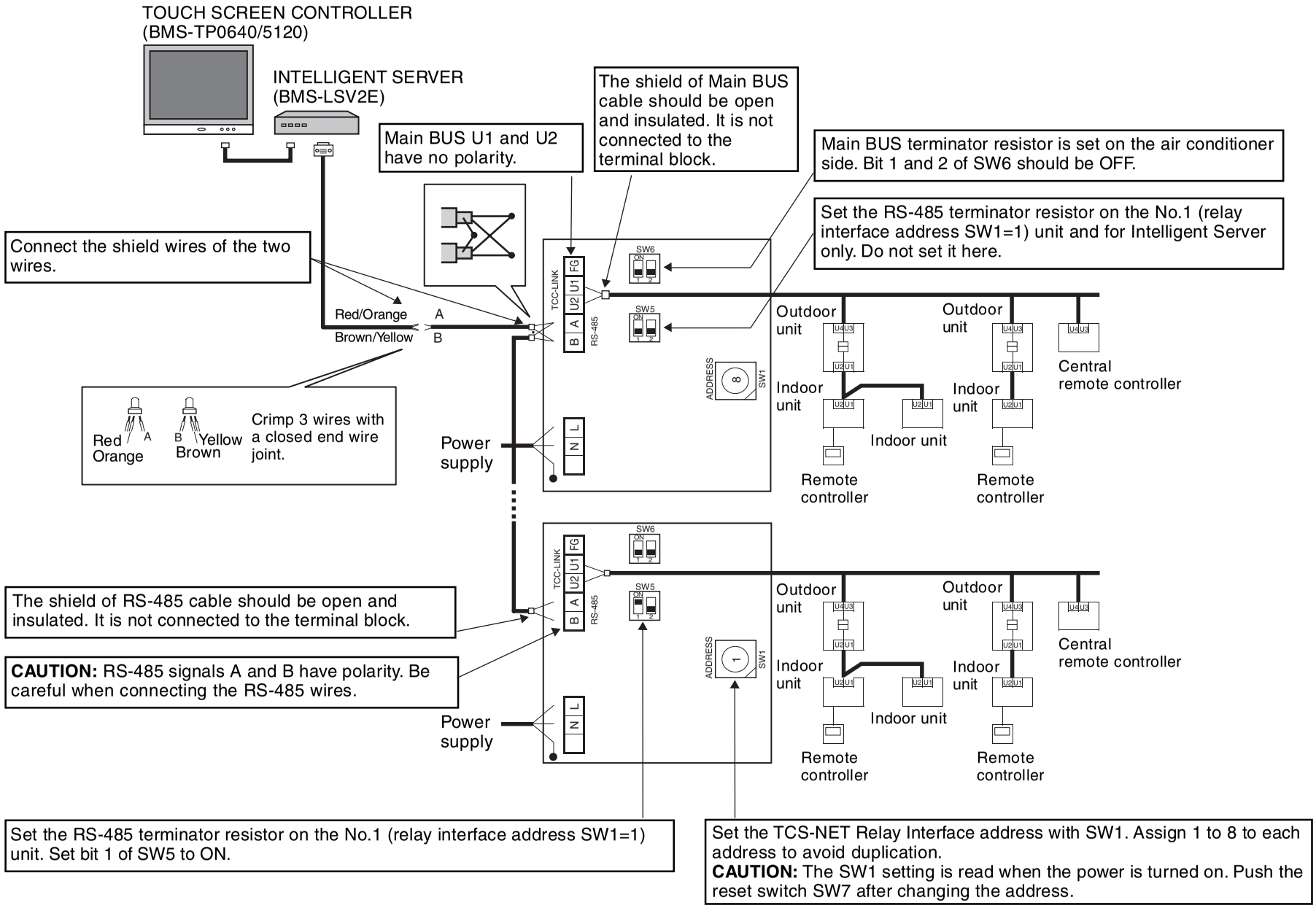

Connections (ENERGY MONITORING RELAY INTERFACE (BMS-IFWH3E))

Connect power cables, earth wires, and signal wires to the specified terminals on the terminal block.

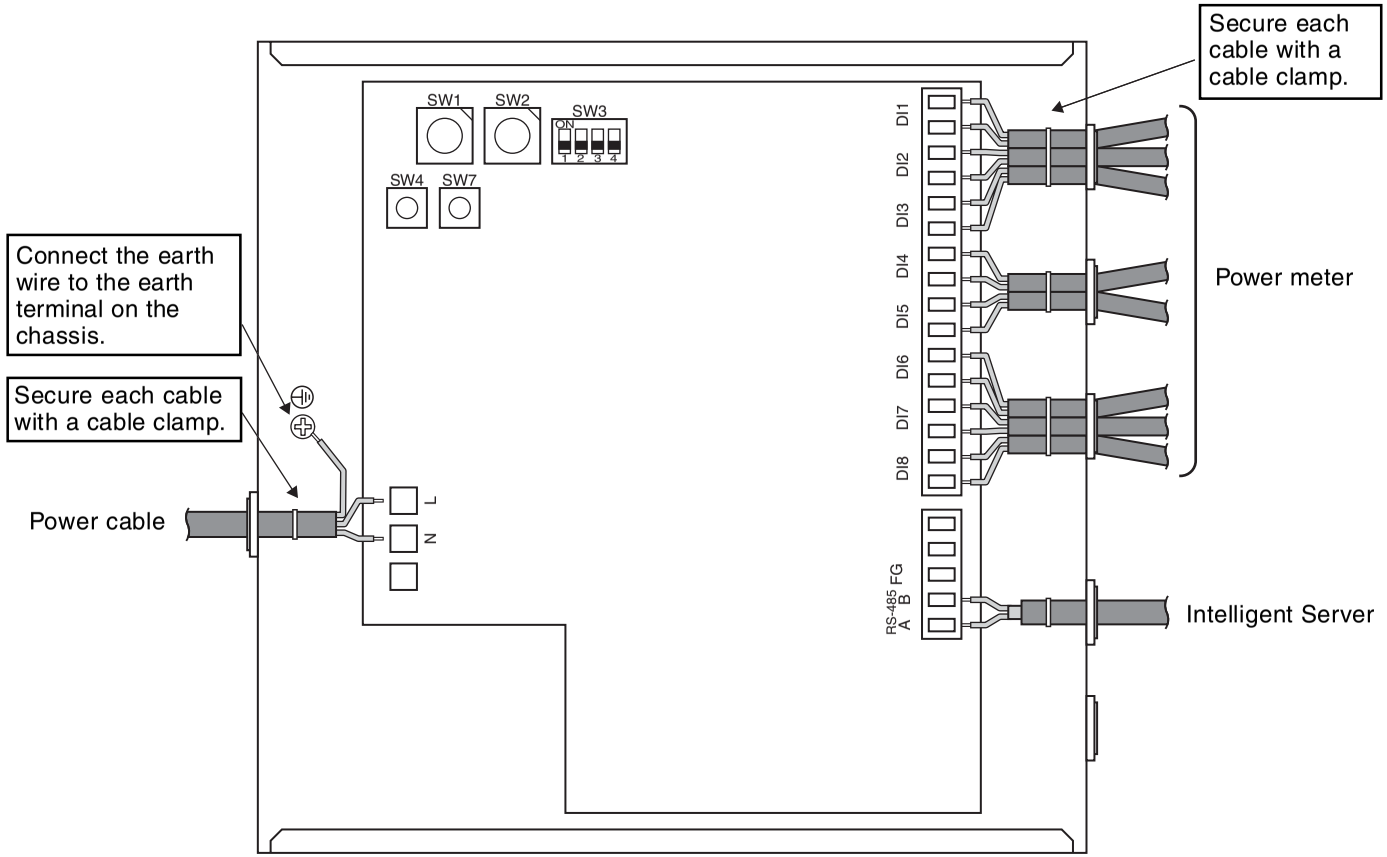

Insert the wire by pushing the lever with a screwdriver. Check that the wire is inserted securely.

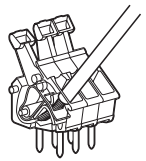

When inserting two RS-485 communication wires into a single terminal for connection to another interface, crimp them using the attached pin terminal.

Length of stripped power cable

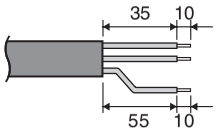

Length of stripped communication wire

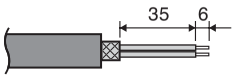

Length of stripped power meter wire

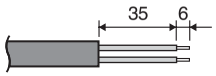

⚠ CAUTION

The RS-485 signal wire has polarity. Connect A to A, and B to B. If connected with incorrect polarity, the unit will not work.

REQUIREMENT

Install a breaker an the primary side of the power supply.

Wiring Connection

The following describes wiring connections of the Energy Monitoring Relay Interface when it is used in the air conditioner control system.

• Terminator resistor setting

Set the RS-485 terminator resistor by the TCS-NET Relay Interface.
Do not set it by the Energy Monitoring Relay Interface.

• Shield earthing

The shield earth of the RS-485 signal wires should be single-point earth. Earth the wires on the Intelligent server side.
Other shield lines should be closed, and the terminal end should be open and insulated.

• Connection of power meter

Use a power meter with a pulse generator.
Connect the non-voltage contact output of the power meter to the Energy Monitoring Relay Interface.
An external input circuit is shown below.
Input signal is electrically isolated by photo-coupler.

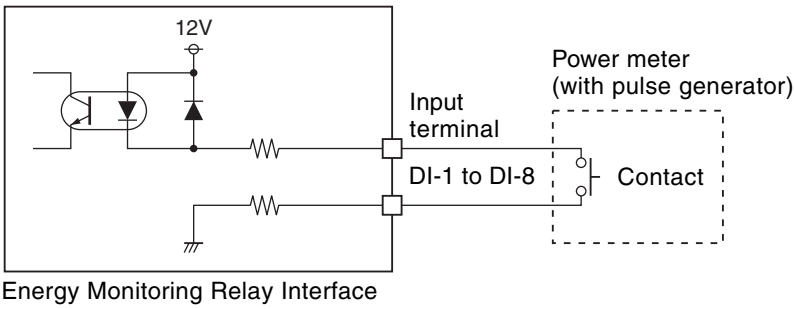

Connection diagram (ENERGY MONITORING RELAY INTERFACE (BMS-IFWH3E))

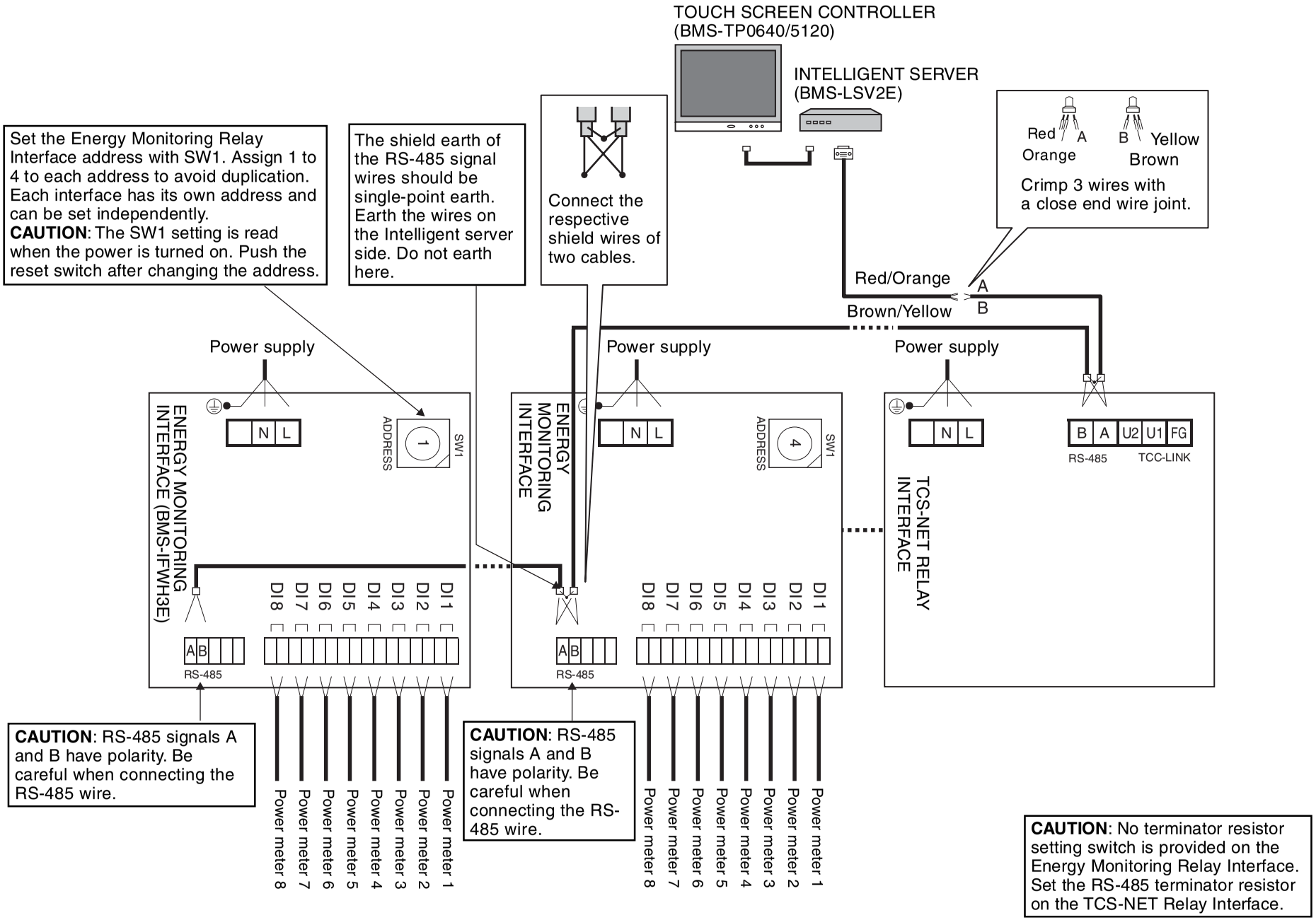

Connections (DIGITAL I/O RELAY INTERFACE (BMS-IFDD01E))

Connect power cables, earth wires, and signal wires to the specified terminals on the terminal block.

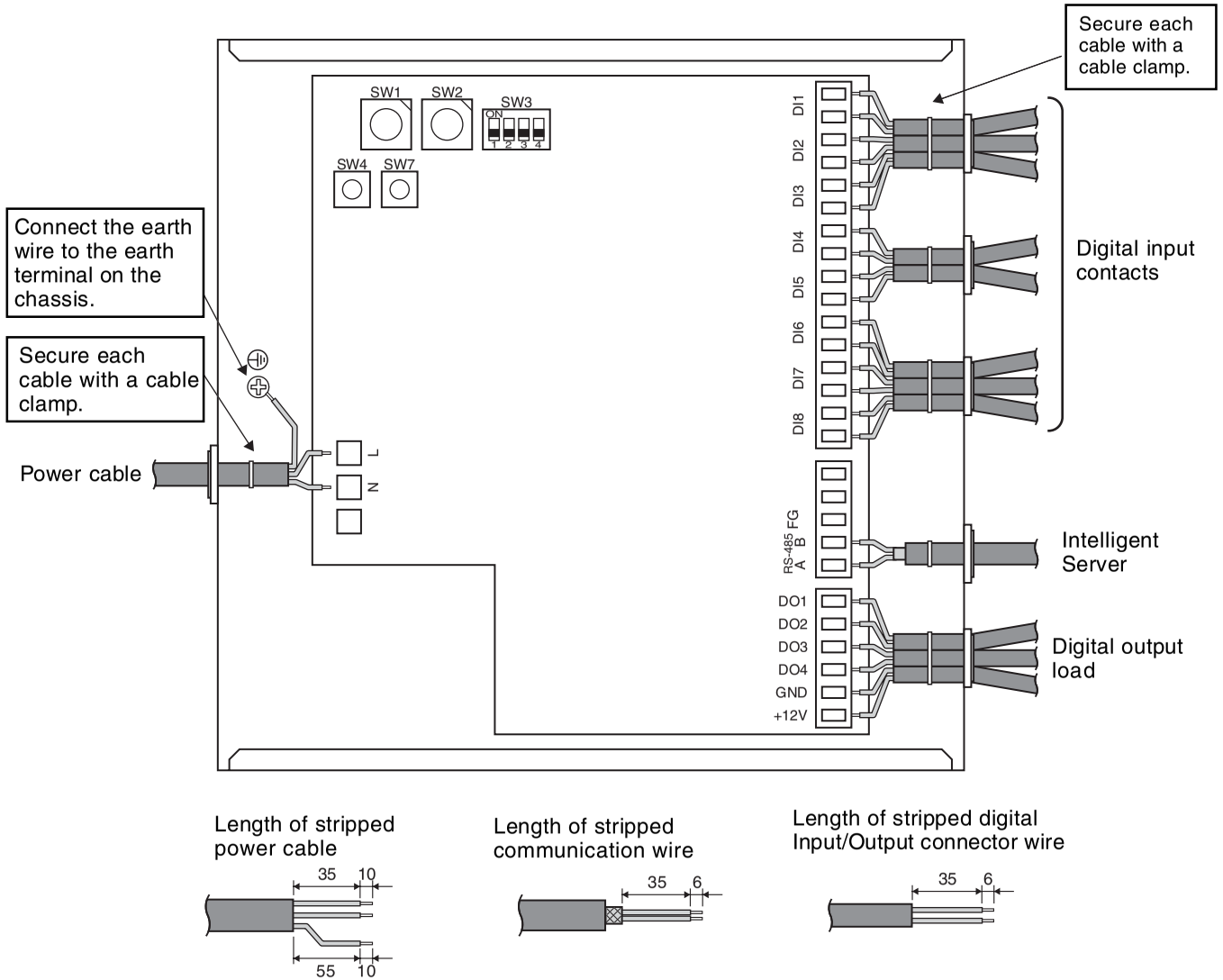

Insert the wire by pushing the lever with a screwdriver. Check that the wire is inserted securely.

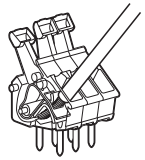

When inserting two RS-485 communication cables into a single terminal for connection to another interface, crimp them using the attached pin terminal.

⚠ CAUTION

The RS-485 signal wire has polarity. Connect A to A, and B to B. If connected with incorrect polarity, the unit will not work.

REQUIREMENT

Install a breaker at the primary side of the power supply.

Wiring Connection

⚠ CAUTION

If an inductive load (relay coil) or a bulb is connected, a surge voltage or rush current will be generated. Take adequate measures against surge voltage or rush current.

The following describes wiring connections of the Digital I/O Relay Interface when it is used in the air conditioner control system.

• Terminator resistor setting

Set the RS-485 terminator resistor by the TCS-NET Relay Interface.
Do not set it by the Digital I/O Relay Interface.

• Shield earthing

The shield earth of the RS-485 signal wires should be single-point earth. Earth the wires on the Intelligent Server.
Other shield lines should be closed, and the terminal end should be open and insulated.

• Connection of external digital inputs

Input circuit examples are shown below (electrically isolated using a photo-coupler).

(1) Example of contact input connection

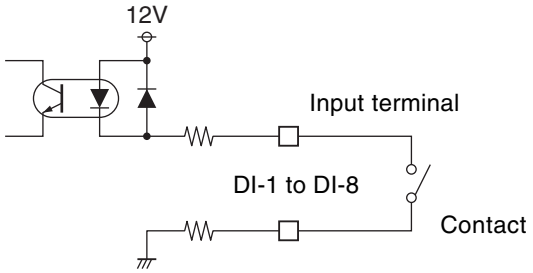

(2) Example of current sink connection

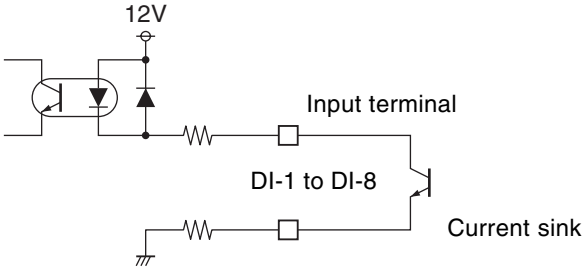

• Connection of external digital outputs

Output circuit examples are shown below (open collector output electrically isolated using a photo-coupler).

(1) Example of load connection

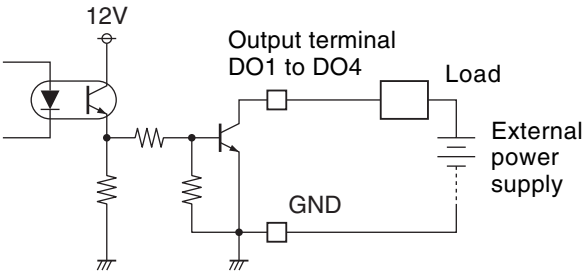

(2) Example of load connection

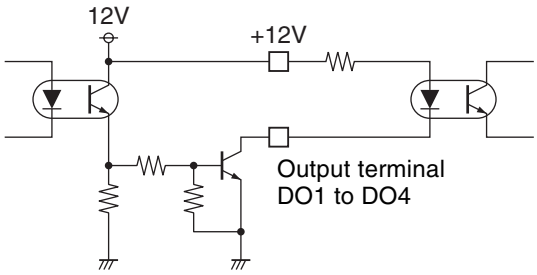

Connection diagram (DIGITAL I/O RELAY INTERFACE (BMS-IFDD01E))

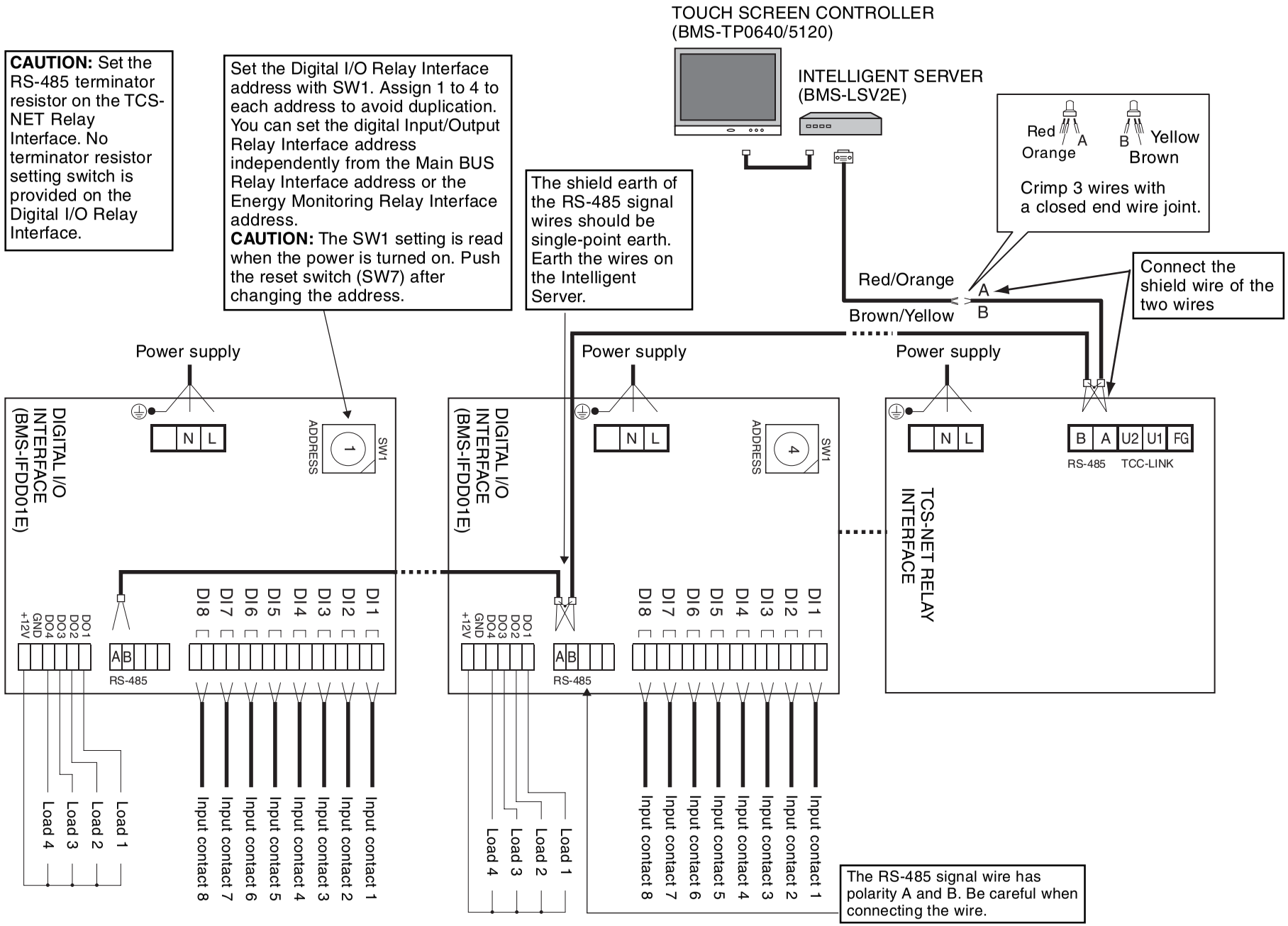

3-6 Network connection

Connecting the Network Wires

Connect the Touch Screen Controller to Intelligent Servers and to an optional PC for creating monthly reports using network wires (category 5UTP straight wire), via a Switching HUB (procured on site).

- Connect the Ethernet port of the controller to a port of the HUB with a network wire.
- Connect the Ethernet port 1 of the Intelligent Server to a port of the HUB with a network wire.
- Connect the PC's Ethernet port to a port of the HUB with a network wire. (Not required if there is not need to create reports.)

Ethernet

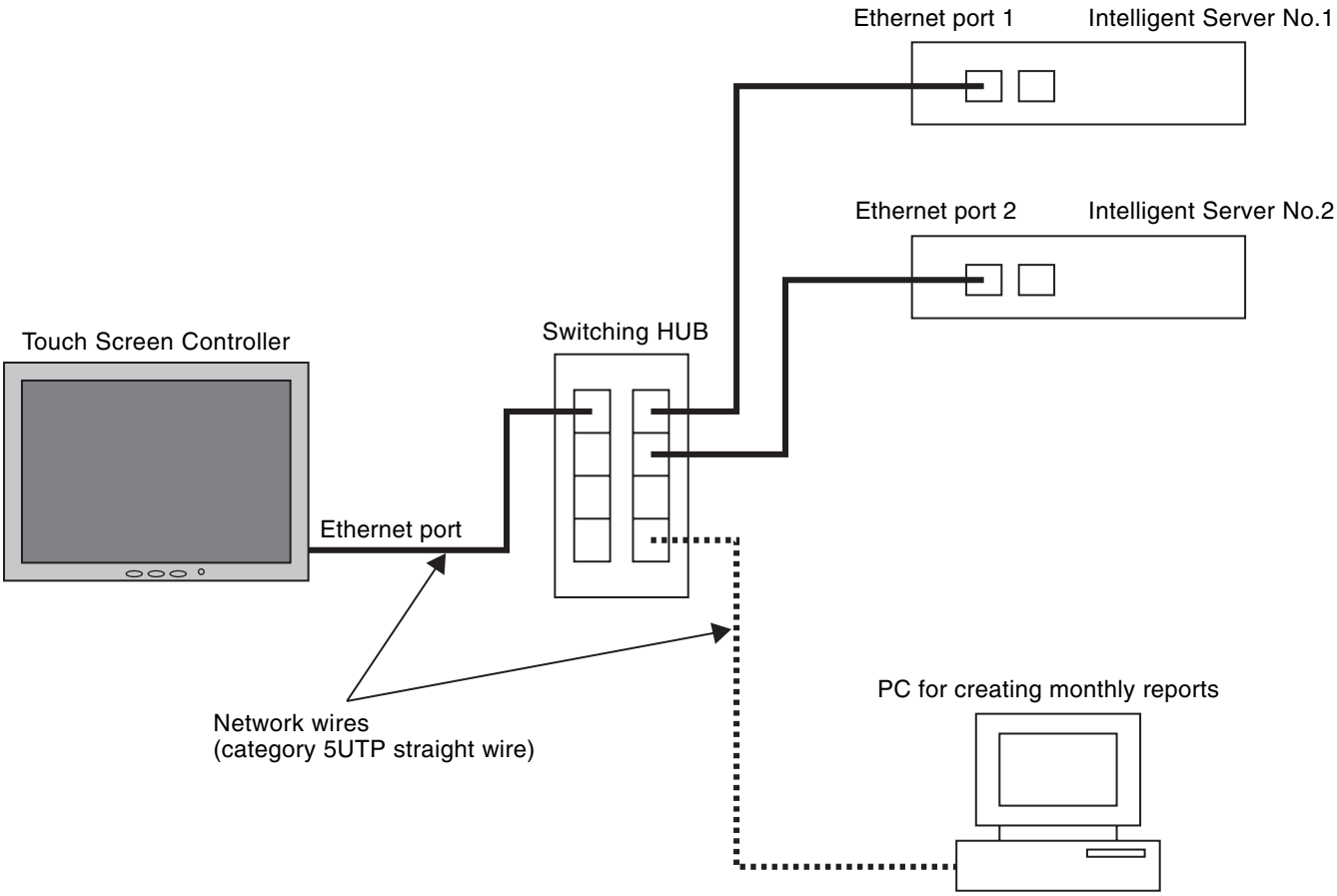

3-7 Control system configuration

To connect the touch screen controller, intelligent server, and PC for energy monitoring and billing via switching HUB, All device IP address setting is necessary.

Device	**IP address**
Touch screen controller:	192.168.2.69 (default address) 192.168.2.70 • •
Intelligent server:	192.168.2.100 (default address) 192.168.2.101 • •
PC for energy monitoring and billing:	192.168.2.** (**: Set number except from 69 to 149)

4

ADDRESS SETTING

4-1 Address setting flow
4-2 Definition of address
4-3 Address setting for air conditioner
4-3-1 Setting for VRF system
(1) Check at main Power-ON
(2) Manual setting from wired remote controller
(3) Line (system) address setting
(4) Power reset
(5) Indoor unit address check
(6) Trial operation
(7) Setup of relay connector and terminator
(8) Central control address setting
(9) Trial operation for central controller (TCB-SC642TLE)
(10) Automatic address setting (for reference)
(11) Clearance of address
(12) Confirmation of indoor unit address and position by using the remote controller
(13) Address change from remote controller
(14) In case of increase the address-undefined indoor units (Extension, etc.)
(15) Address setup example (VRF system)
4-3-2 Setting for 1 by 1 system
(1) Address re-setup
(2) Indoor address change example
4-4 Address setting for control system devices
4-4-1 Address setting flow
4-4-2 Setting for Intelligent Server
4-4-3 Setting for TCS-Net relay interface
4-4-4 Setting for Energy monitoring relay interface
4-4-5 Setting for Digital I/O relay interface

4-1 Address setting flow

Setting flow	Contents	Reference No.
Power ON	Indoor units/Outdoor units	4-3-1 (1)
Manual address setting	Setting from main wired remote controller (Line/Group/Indoor address setting)	4-3-1 (2)
Line address setting	Dip Switch setting on outdoor interface P.C.board	4-3-1 (3)
Power reset	Power reset to activate line address	4-3-1 (4)
Indoor unit address check	7 segment display on outdoor interface P.C.board check line/indoor address on remote controller	4-3-1 (5)
Trial operation (Refrigerant system)	Test operation in each refrigerant system one by one	4-3-1 (6)
Setup of relay connector and SW30-2	Central control wiring and terminator setting	4-3-1 (7)
Central controller exist ?		
Central control device setting	Local central remote controller setting any (Central remote controller, ON/OFF controller, etc)	4-3-1 (8)
Trial operation (Central control device)	Test for local central control device	4-3-1 (9)
TCS-NET control system address setting Local server TCS-NET relay I/F Energy monitoring relay I/F Digital I/O relay I/F	Switch setting CF (Compact Flash) card mounting	4-4
Trial operation for Touch panel controller	Operation from touch screen controller	Chapter. 5

4-2 Definition of address

Indoor unit address

- "Indoor unit address" is to make outdoor unit recognize an individual indoor unit.
  This indoor unit address is allocated to every indoor unit one by one for every refrigerant system.
  (At shipment=99, Address unset)

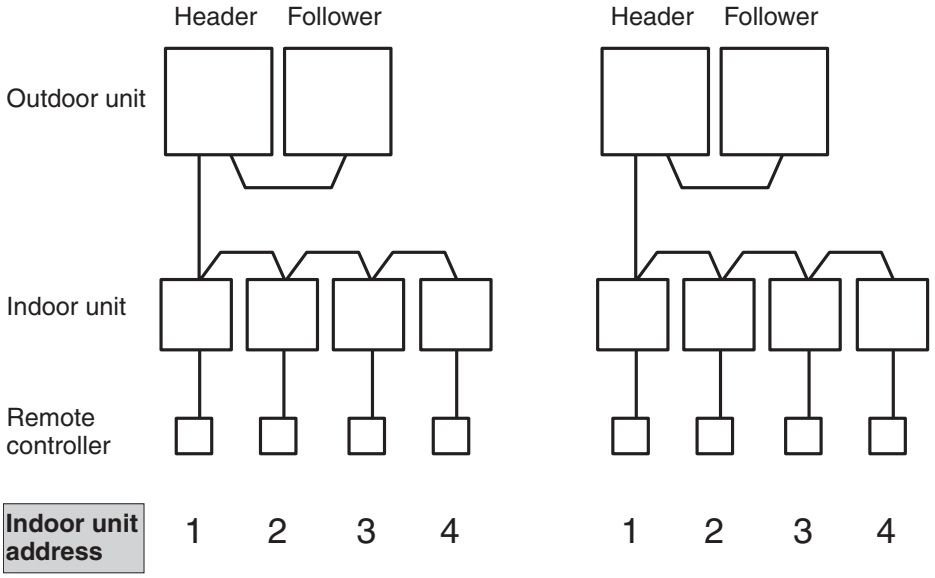

Group address

- "Group address" is the address to recognize group control and decide the header indoor unit and the follower indoor unit.
  Group address and header indoor unit is decided automatically when automatic address setting is performed.
  (Which indoor unit becomes the header unit is indefinite when automatic address setting is performed.)
  Indoor unit on individual control : Group address = 0 (At shipment=99, Address unset)
  Header indoor unit of group control : Group address = 1
  Follower indoor unit of group control : Group address = 2

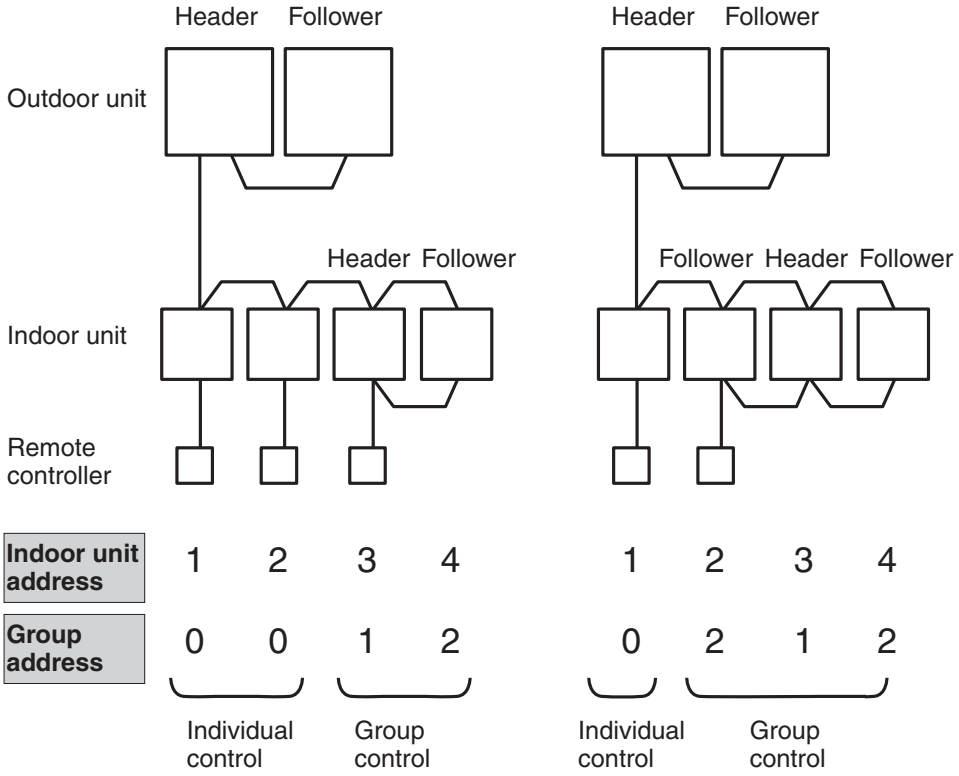

Line address (System address)

- "Line address" is the address with which line (refrigerant system) indoor units are connected.
  This line address is set by switch setting on interface P.C. board of the header outdoor unit.

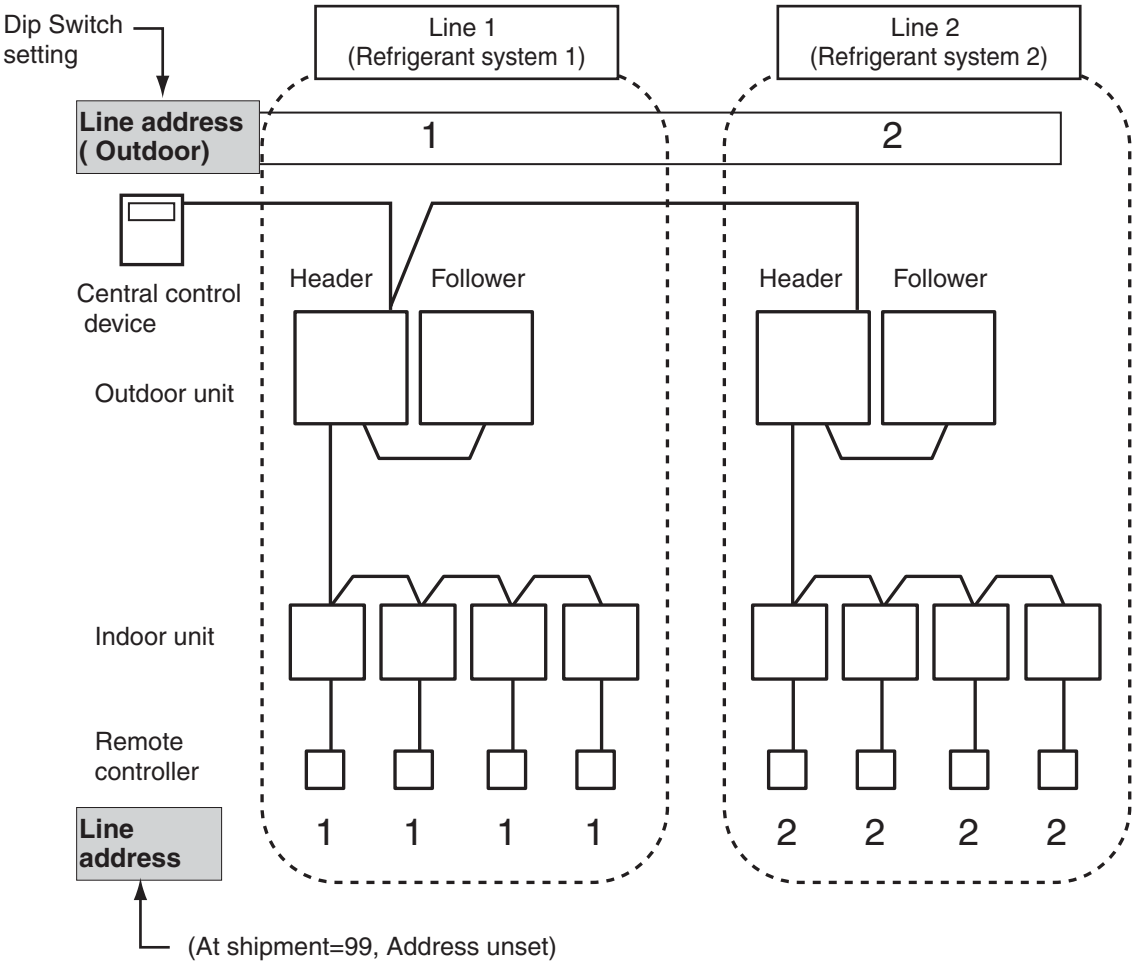

Central control address

- "Central control address" is to make central control devices recognize each indoor unit.
  This address can be set from central control devices automatically or manually.
  In case of group control on VRF system, one central control address is allocated to each indoor unit in a group control.

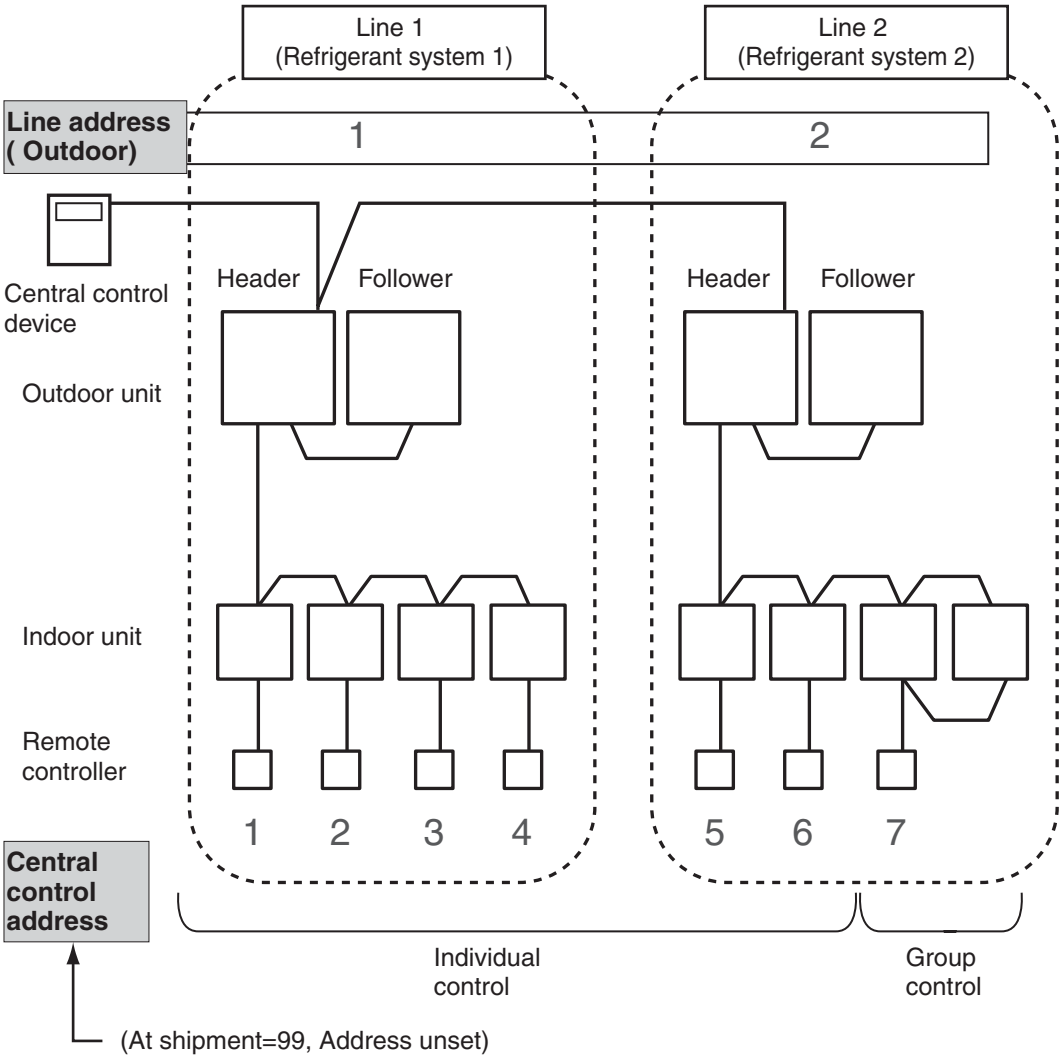

Zone address (Zone No.)

- "Zone address" is to be set when the central remote controller is used for each zone.
  Zone address is set by switch setting on central remote controller.

  Central remote controller can divide all indoor units into max. 4 zone.
  The zone to which the indoor unit belongs is decided by its central control address.

Central control address	Zone No.
1 to 16	Zone 1
17 to 32	Zone 2
33 to 48	Zone 3
49 to 64	Zone 4

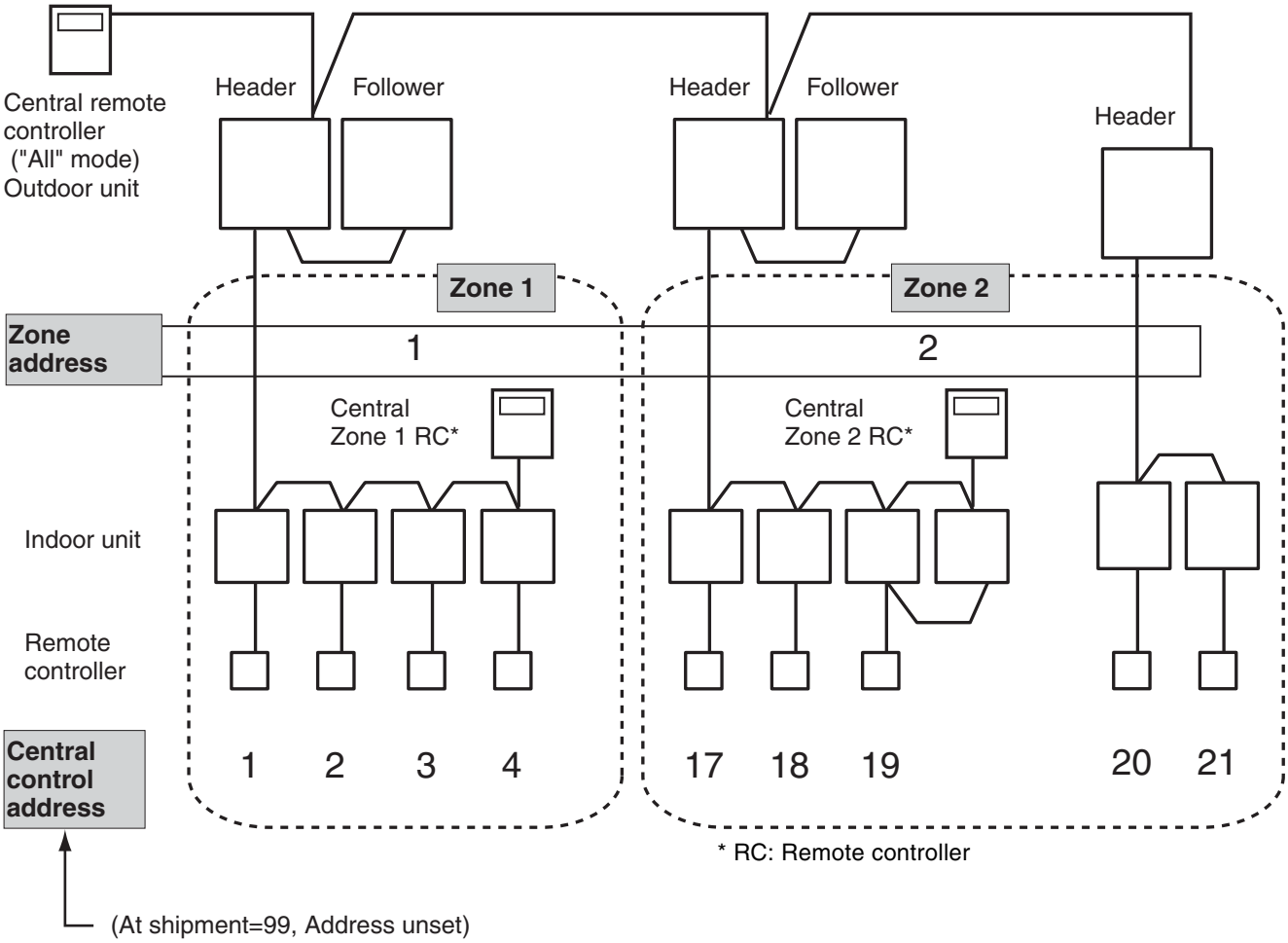

TCS-NET control system address

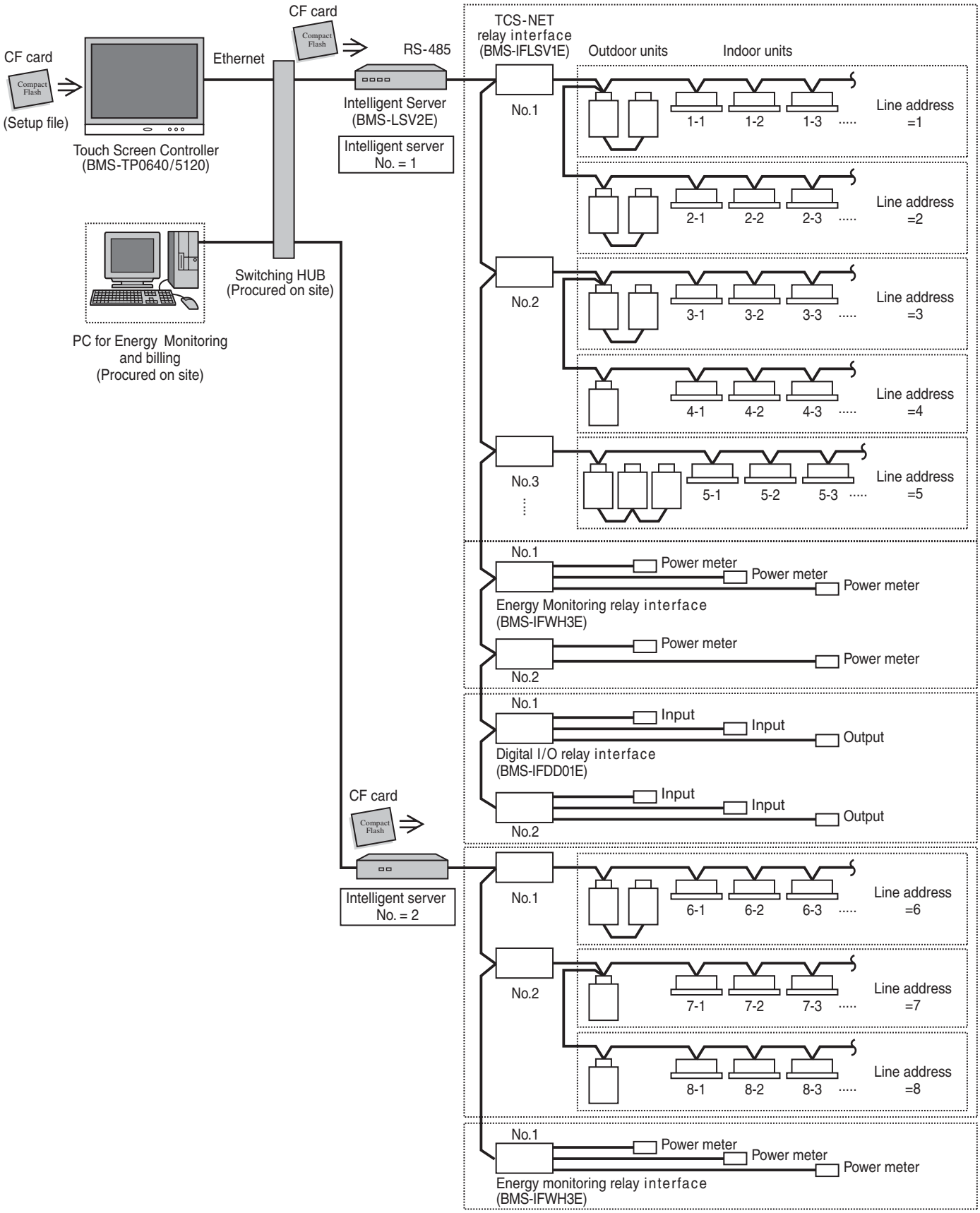

TCS-NET control system address	Number	Setting method
TCS-NET relay interface No.	1 to 8	Set by SW1 on P.C. board.
Energy monitoring relay interface No.	1 to 4	Set by SW1 on P.C. board.
Digital I/O relay interface No.	1 to 4	Set by SW1 on P.C. board.
Interigent server No.	1 to 4	Set based on setup data in CF card on touch panel controller.

4-3 Address setting for air conditioner

4-3-1 Setting for VRF system

In this air conditioner, it is required to set up address to the indoor unit before starting operation. Set up the address according to the following setup procedure.

⚠ CAUTION

1. Set up address after wiring work.
2. Be sure to turn on the power in order of indoor unit → outdoor unit. If turning on the power in the reverse order, a check code [E19] (Error of No. of header units) is output.
   When a check code is output, turn on the power again.
3. To set up an address, it is unnecessary to operate the air conditioner.
4. Manual address setting is recommended for TCS-NET control system
   Manual address: Setup from the wired remote controller
   * It is temporarily necessary to set the indoor unit and wired to 1 by 1.
     (In group operation and in time without remote controller)
5. Automatic address setup is also available besides manual setup.
   Automatic address: Setup from SW15 on the interface P.C. board of the header unit
   It requires maximum 10 minutes (Usually, approx. 5 minutes) to set up automatically an address to 1 line.
6. To set up an address automatically, the setup at outdoor side is necessary.
   (Address setup cannot be performed by power-ON only.)

4-3-1 (1) Check at main power-ON

After turning on the main power of the indoor units and outdoor unit in the refrigerant system to be executed with a test operation, check the following items in each outdoor and indoor unit.
(After turning on the main power, be sure to check in order of indoor unit → outdoor unit.)

<Check on outdoor unit>

1. Check that all the rotary switches, SW01, SW02, and SW03 on the interface P.C. board of the header outdoor unit are set up to “1”.
2. If other error code is displayed on 7-segment [B], remove the cause of trouble.
3. **Check that [L08] is displayed on 7-segment display [B]** on the interface P.C. board of the header outdoor unit. (L08: Indoor address unset up)

   (If the address setup operation has already finished in service time, etc, the above check code is not displayed, and only [U1] is displayed on 7-segment display [A].)

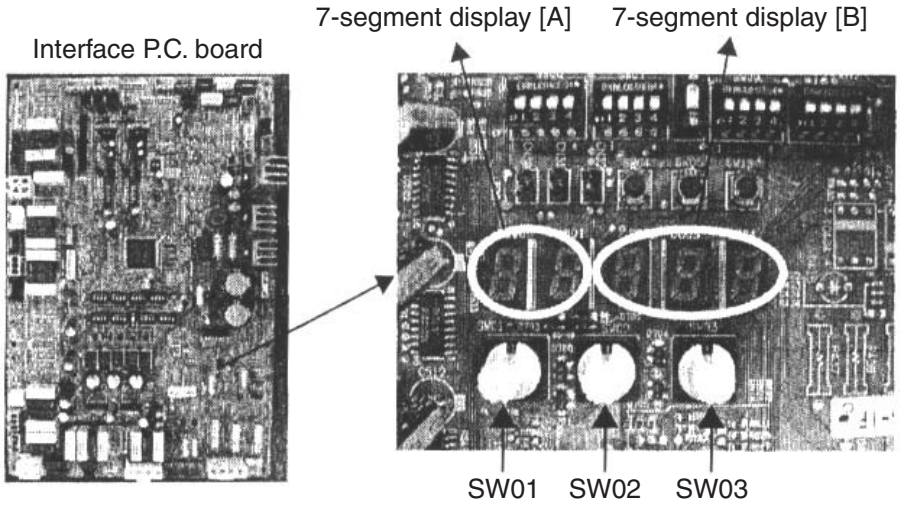

<Check on indoor unit>

1. Display check on remote controller (In case of wired remote controller)

   Check that a frame as shown in the following left figure is displayed on LC display section of the remote controller.

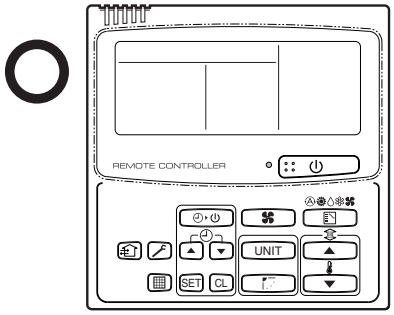

Normal status
(Power and operation stop)

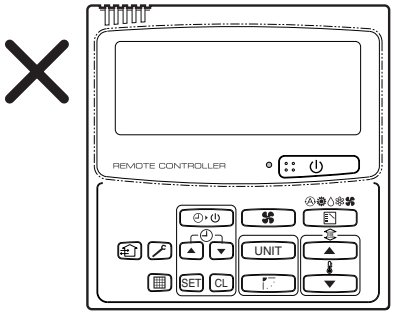

Abnormal status
(Power is not normally turned on.)

If a frame is not displayed as shown in the above right figure, the power of the remote controller is not normally turned on. Therefore check the following items.

- Check power supply of indoor unit.
- Check wiring between indoor unit and remote controller.
- Check whether there is cutoff of cable around the indoor control P.C. board or not, and check connection failure of connectors.
- Check failure of transformer for the indoor microcomputer.
- Check indoor control P.C. board failure.

4-3-1 (2) Manual setting from wired remote controller

⚠ CAUTION

Be sure to allocate Line (system) /Group/Indoor address one by one to match the address setting table and setup file that is prepared beforehand.
If wrong value is set, a problem such as error of communication with air conditioner will occur.

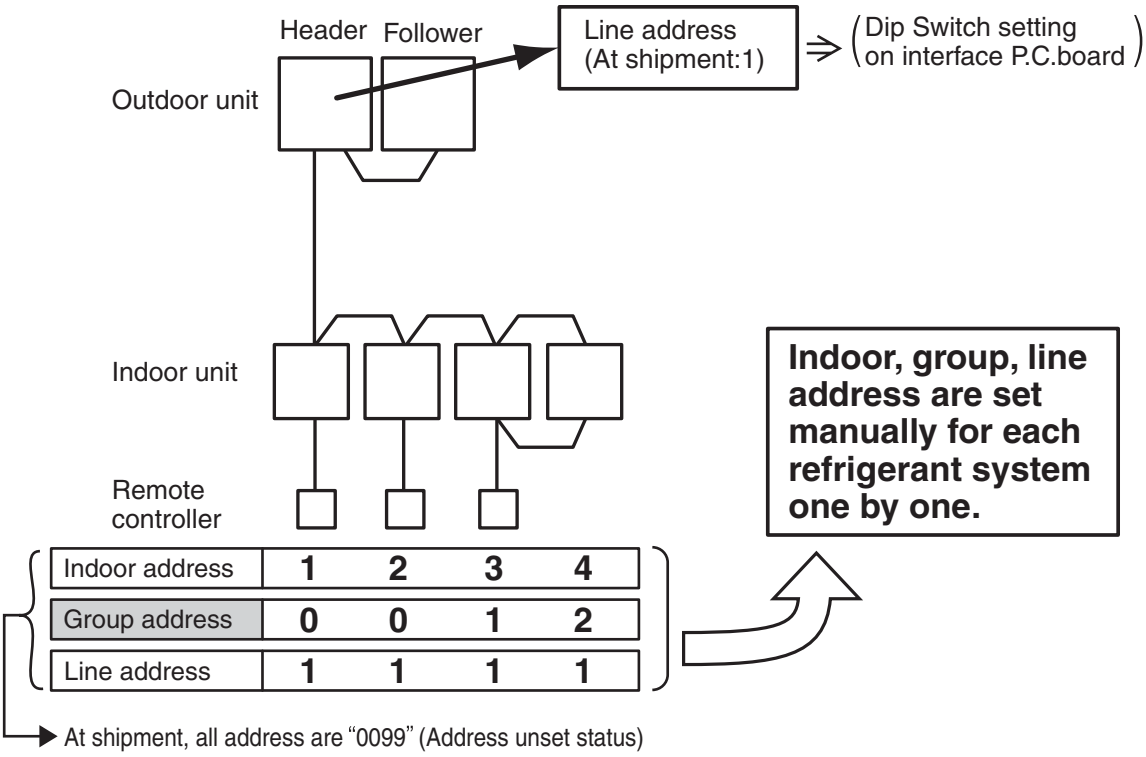

(Step 1)
Arrange one indoor unit and one remote controller (RBC-AMT21E) set to 1 by 1.

Note:Don't use simple remote controller or wireless remote controller.
(Address setting is not available.)

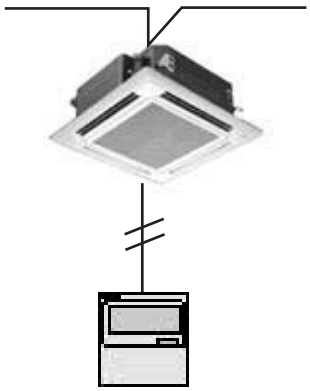

Connect wired remote controller individually when manual address setting

(Step 2)

Note)
When setting the line address from the remote controller, do not use address 29 and 30.
The address 29 and 30 cannot be set up in the outdoor unit. Therefore if they are incorrectly set up, a check code [E04] (Indoor/outdoor communication circuit error) is output.

Turn on the power.

Item code

Line (system) address	12
Indoor address	13
Group address	14

(Wiring example in 2 systems)

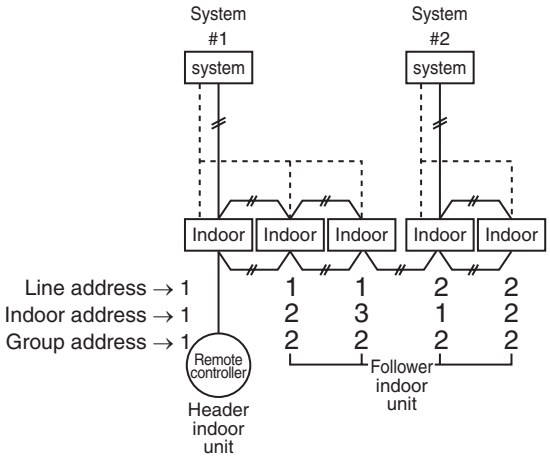

In the above example, under condition of no inter-unit wire of the remote controller, set the address after individual connecting of the wired remote controller.

Group address

Individual : 0000
Header unit : 0001 } In case of group control
Follower unit : 0002

Operation procedure

1 → 2 → 3 → 4 → 5 → 6 → 7 → 8 → 9 → 10 → 11 **End**

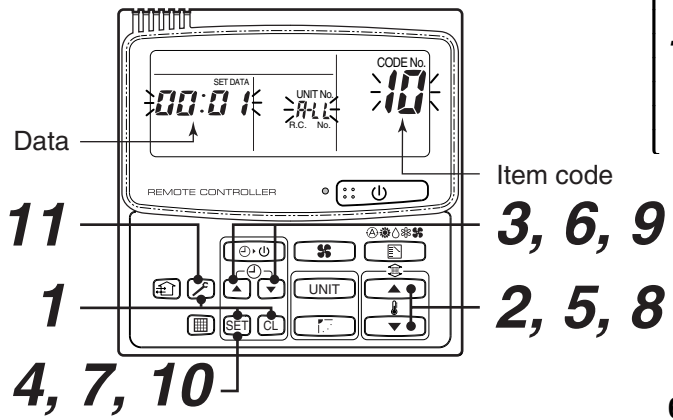

1 **Push simultaneously SET + CL + 🔧 buttons for 4 seconds or more.**
LCD changes to flashing.

(Line address)

2 **Using the setup temp. ▲ / ▼ buttons, set 12 to the item code.**

3 **Using the timer time ▲ / ▼ buttons, set up the line address.**
(Match it with the line address on the interface P.C. board of the header unit in the identical refrigerant system.)

4 **Push SET button.**
(OK when display goes on.)

(Indoor address)

5 **Using the setup temp. ▲ / ▼ buttons, set 13 to the item code.**

6 **Using the timer time ▲ / ▼ buttons, set up the indoor address.**

7 **Push SET button.**
(OK when display goes on.)

(Group address)

8 **Using the setup temp. ▲ / ▼ buttons, set 14 to the item code.**

9 **Using the timer time ▲ / ▼ buttons, set Individual = 0000, Header unit = 0001, Follower unit = 0002.**

10 **Push SET button.**
(OK when display goes on.)

11 **Push 🔧 button.**
Setup operation finished.
(Status returns to normal stop status.)

4-3-1 (3) Line (System) address setting

1. Using SW13 and 14 on the interface P.C. board of the header unit in each system, set up the system address for each system. (At shipment from factory: Set to Address 1)

Note) Be careful not to duplicate with other refrigerant line.

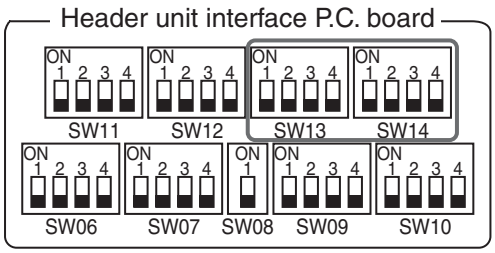

System address switch on outdoor interface P.C. board

(○: Switch ON, × : Switch OFF)

System address	SW13				SW14			
	1	2	3	4	1	2	3	4
1				×	×	×	×	×
2				×	○	×	×	×
3				×	×	○	×	×
4				×	○	○	×	×
5				×	×	×	○	×
6				×	○	×	○	×
7				×	×	○	○	×
8				×	○	○	○	×
9				×	×	×	×	○
10				×	○	×	×	○
11				×	×	○	×	○
12				×	○	○	×	○
13				×	×	×	○	○
14				×	○	×	○	○

System address	SW13				SW14			
	1	2	3	4	1	2	3	4
15				×	×	○	○	○
16				×	○	○	○	○
17				○	×	×	×	×
18				○	○	×	×	×
19				○	×	○	×	×
20				○	○	○	×	×
21				○	×	×	○	×
22				○	○	×	○	×
23				○	×	○	○	×
24				○	○	○	○	×
25				○	×	×	×	○
26				○	○	×	×	○
27				○	×	○	×	○
28				○	○	○	×	○

: Is not used for setup of system address. (Do not change setup.)

2. Check that the relay connectors between [U1U2] and [U3U4] terminals are come out in all the header units to which the central control is connected.
(At shipment from factory: No connection of connector)

⚠ CAUTION

Be sure to allocate different line address for each refrigerant system as much as possible even if there are two or more TCS-NET relay interfaces.

4-3-1 (4) Power reset

- To activate line address on both outdoor and indoor unit side, power supply is temporarily reset.
- When power is supplied again, be sure to the power of indoor unit prior to the outdoor unit.

4-3-1 (5) Indoor unit address check

<table>
<tr><th>Step</th><th>Item</th><th>Operation and check contents</th></tr>
<tr><td>1</td><td>Power - on</td><td>Initial communication takes a couple of minutes.
During initial communication, 7-segment display section is as follows as follows.
Display [A] --- [U1], flashing Display [B] --- [- - 0] --> [- - i] flashing</td></tr>
<tr><td>2</td><td>Display check</td><td>After initial communications, [U1] are displayed in 7-segment display section.
(If error code is displayed in display section [B], remove the cause reffering to “trouble shooting” of installation or service manual.)</td></tr>
<tr><td>3</td><td>System information check (Outdoor side)</td><td>
<table>
<tr><th></th><th colspan="3">Rotary switch setup</th><th colspan="2">7-segment display</th></tr>
<tr><th></th><th>SW01</th><th>SW02</th><th>SW03</th><th>[A]</th><th>[B]</th></tr>
<tr><td>System capacity</td><td>1</td><td>2</td><td>3</td><td>[No. of HP]</td><td>[HP]</td></tr>
<tr><td>No. of connected outdoor units</td><td>1</td><td>3</td><td>3</td><td>[No. of indoor units]</td><td>[ ]</td></tr>
<tr><td>No. of connected indoor units</td><td>1</td><td>4</td><td>4</td><td>[No. of outdoor units]</td><td>[ ]</td></tr>
<tr><td>Indoor address No. and capacity</td><td>6</td><td>1 to 16</td><td>1 to 3</td><td>[Indoor unit address]</td><td>[Capacity (HP)]</td></tr>
</table>
Note) Indoor unit address No. is choosen by changing SW02 and SW03.
<table>
<tr><th>SW02</th><th>SW03</th><th>Indoor address</th><th>7-segment [A]</th></tr>
<tr><td>1 to 16</td><td>1</td><td>SW02 setup number</td><td>[01] to [16]</td></tr>
<tr><td>1 to 16</td><td>2</td><td>SW02 setup number +16</td><td>[17] to [32]</td></tr>
<tr><td>1 to 16</td><td>3</td><td>SW02 setup number +32</td><td>[33] to [48]</td></tr>
</table>
<On the header outdoor interface P.C.board>
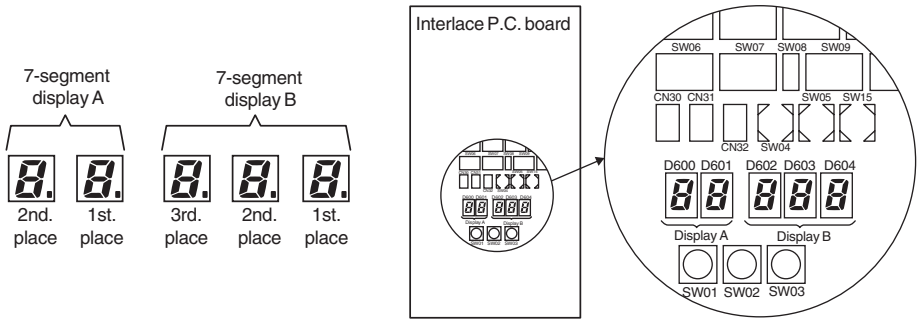

</td></tr>
<tr><td>4</td><td>Address information check (indoor side)</td><td>
<Procedure> (Operation while the air conditioner operates)
1 If it stops, push button.
2 Push UNIT button.
The unit NO 1- 1 is displayed on the LCD. (Disappears after several seconds) The displayed unit No indicates the line address and indoor address. (If there is other indoor unit connected to the same remote controller (Group control unit), other unit No is displayed every pushing UNIT button.)
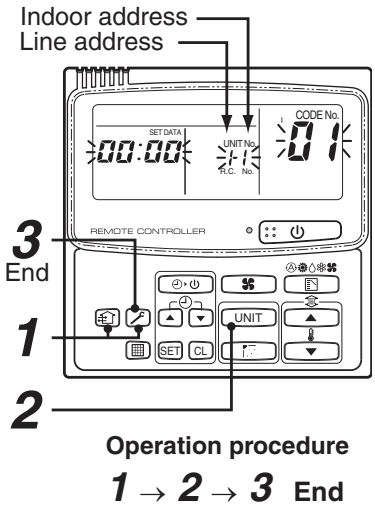

</td></tr>
</table>

4-3-1 (6) Trial operation

Please refre to the trial operation on the manual of air conditioner.

4-3-1 (7) Setup of relay connector and terminator

- After trial operation for each refrigerant system, set the relay connector and terminator resistor for all refrigerant system which are connected from one TCS-NET relay interface.

<Procedure>

1 How to set up terminator resistor (SW30)

When all the address setups have finished in the same refrigerant system, put the terminator resistor (SW30) in the same central control line into one.

- Remain only SW30-2 of the header outdoor unit with the least line address number as it is ON. (With terminal resistor)
- Set up SW30-2 of the other header outdoor units to OFF. (Without terminal resistor)

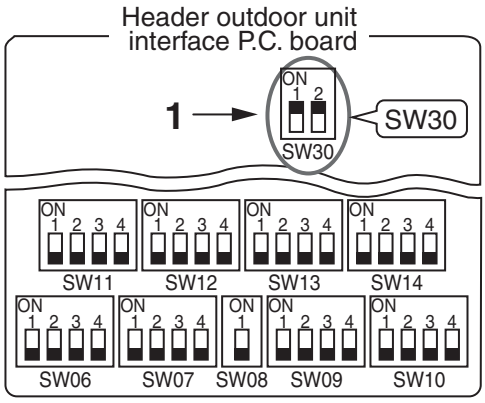

2 Connect the relay connector between [U1U2] and [U3U4] of the header outdoor unit for each refrigerant system.

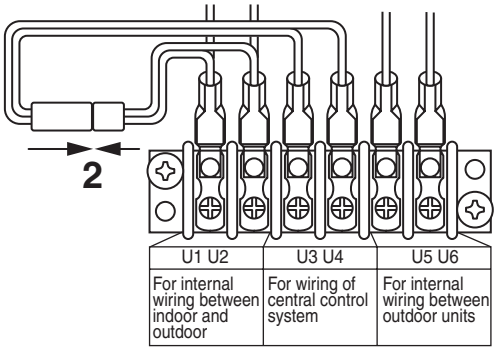

<System diagram (example)>

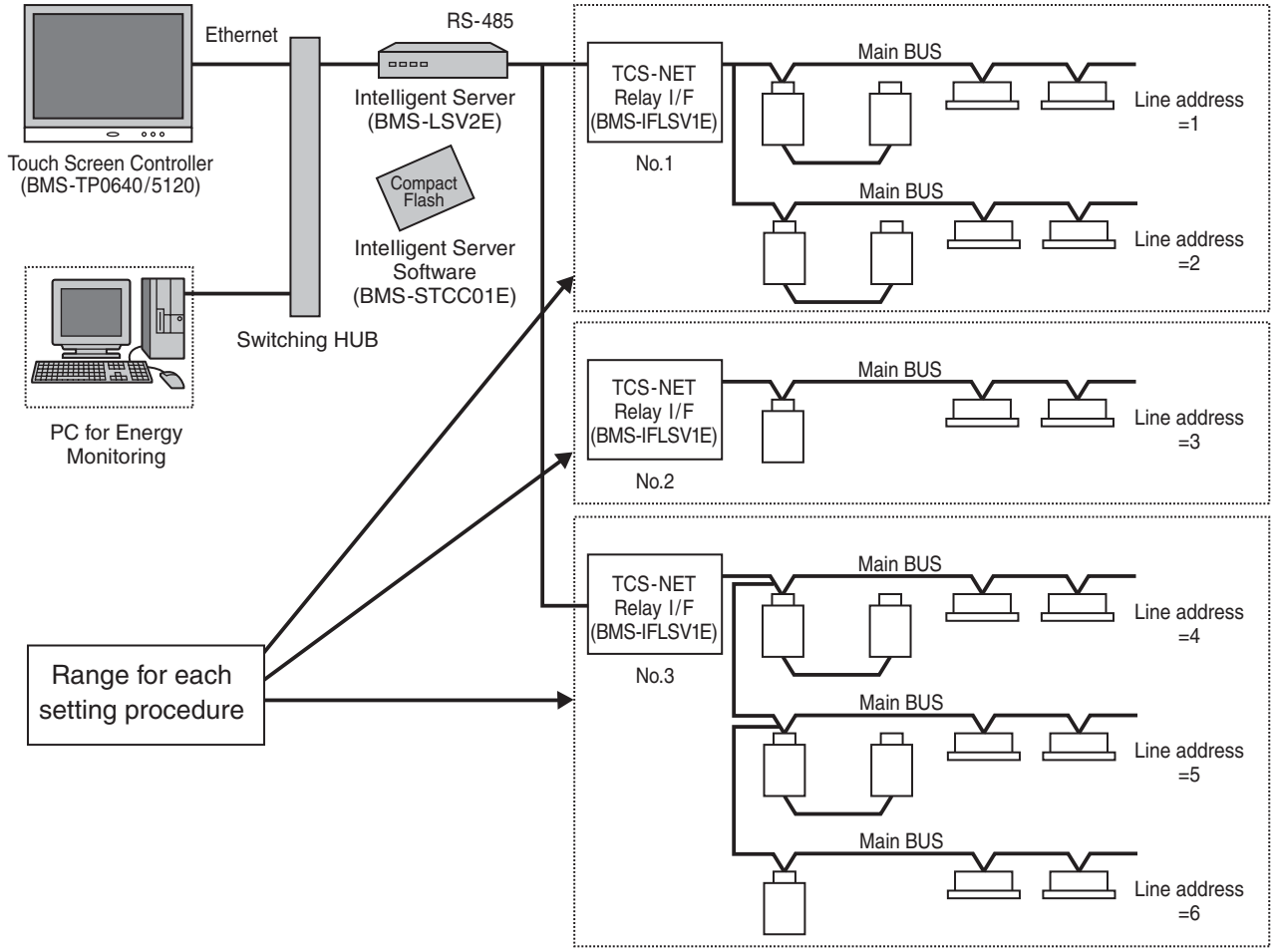

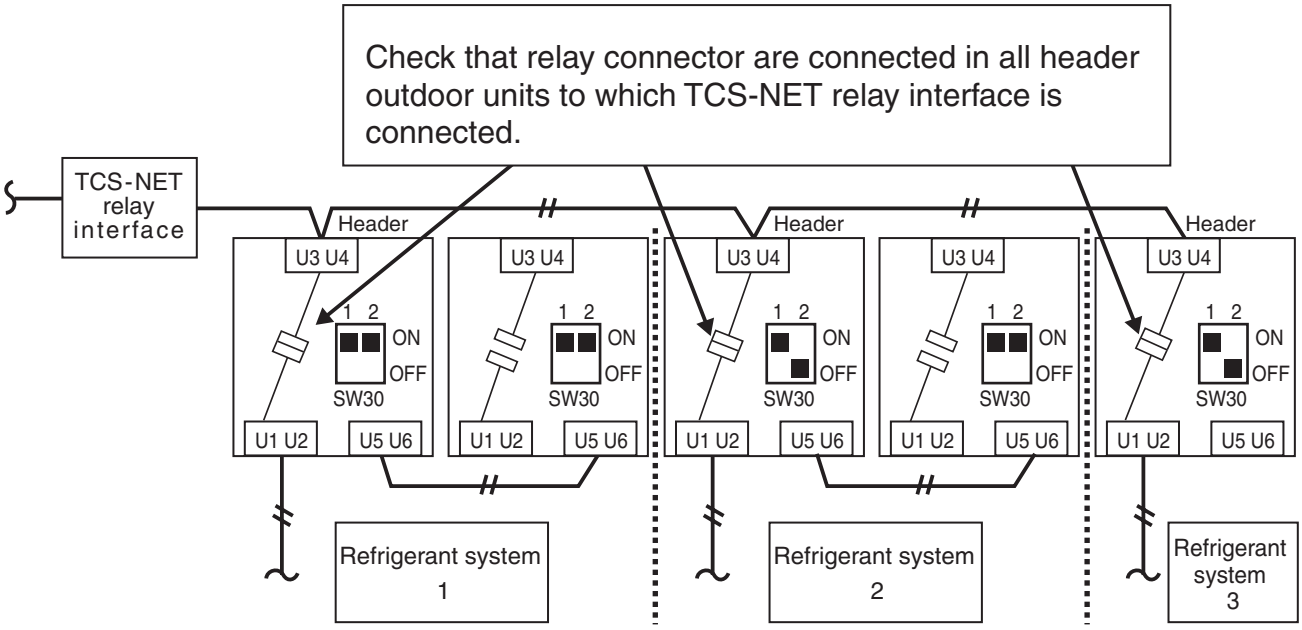
Check that relay connector are connected in all header outdoor units to which TCS-NET relay interface is connected.
TCS-NET relay interface
Header
U3 U4
1 2
ON
OFF
SW30
U1 U2
U5 U6
Refrigerant system 1
Refrigerant system 2
Refrigerant system 3

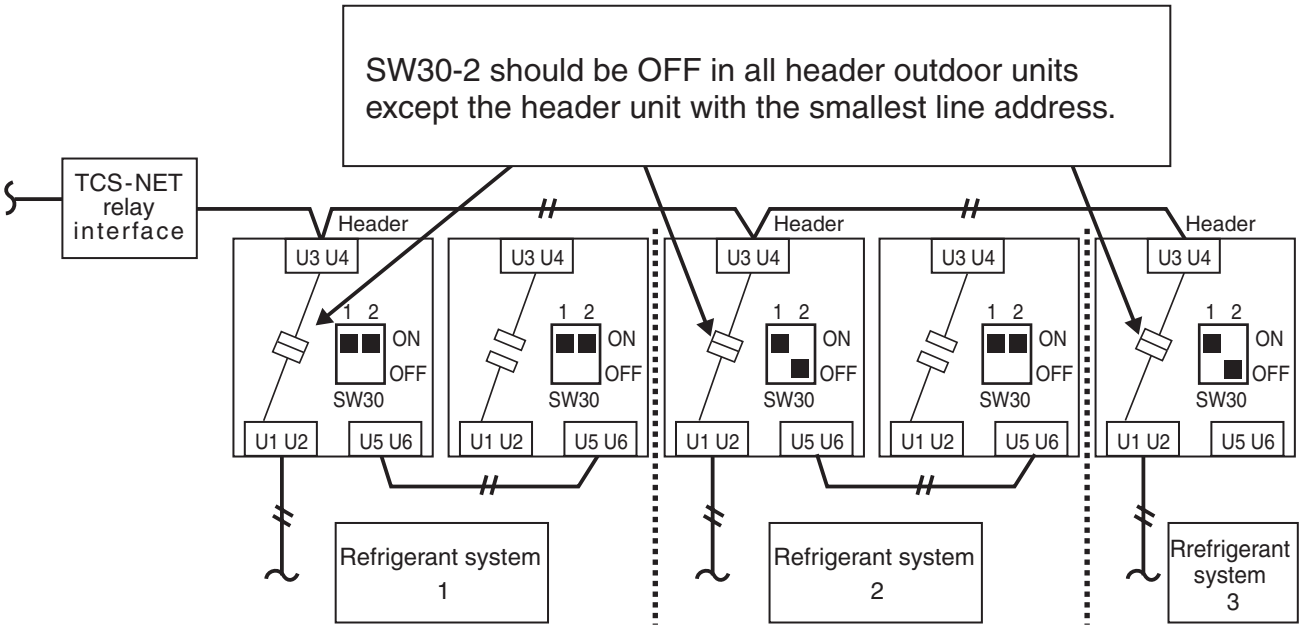
SW30-2 should be OFF in all header outdoor units except the header unit with the smallest line address.
TCS-NET relay interface
Header
U3 U4
1 2
ON
OFF
SW30
U1 U2
U5 U6
Refrigerant system 1
Refrigerant system 2
Rrefrigerant system 3

	1	2	3
Before address setup During setup of address	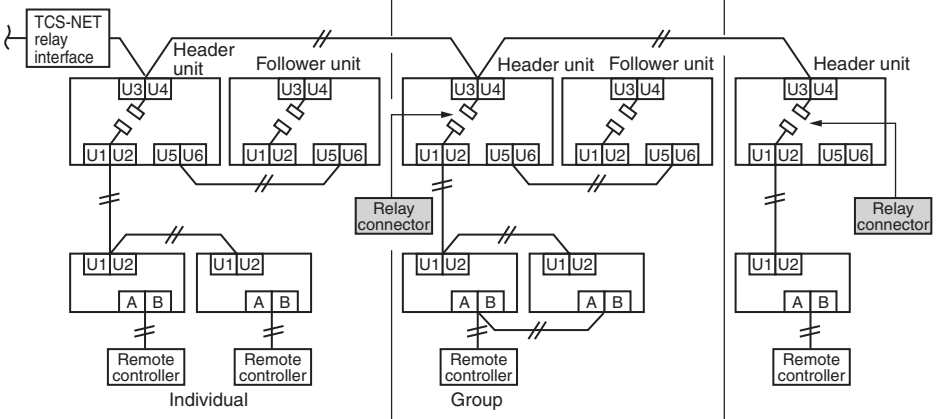		
After address setup	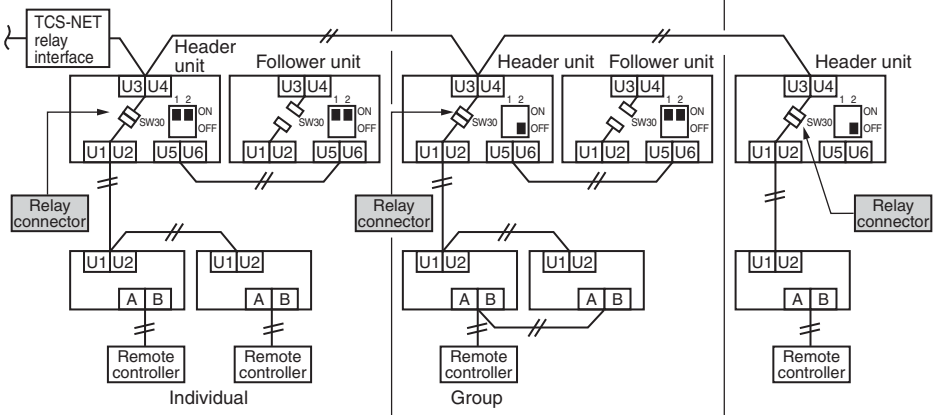		

Outdoor interface P.C. board	Header unit	Follower unit	Header unit	Follower unit	Header unit	Setup at shipment from factory
SW13, 14 (Line address)	1	(Setup is unnecessary.)	**2**	(Setup is unnecessary.)	**3**	1
SW30-2 Terminal-end resistance of indoor/outdoor communi cation line/central control communication line	ON	(Setup is unnecessary.)	**OFF after address setup**	(Setup is unnecessary.)	**OFF after address setup**	ON
Relay connector	**Connect short after address setup**	Open	**Connect short after address setup**	Open	**Connect short after address setup**	Open

Indoor side

Line address	1	1	2	2	3
Indoor unit address	1	2	1	2	1
Group address	0	0	1	2	0

POINT

Never connect a relay connector until address setup for all the refrigerant system finishes; otherwise address cannot be correctly set up.

After this setting, if central control devices (central remote controller or ON/OFF controller) are connected, set up the central control address.
(For the central control address setup, refer to “4-3-1 (8) Central control address setting” the installation manual of the central control devices.)

4-3-1 (8) Central control address setting

(Note)

1) Perform after the setting of indoor and outdoor unit address (Indoor/group/line address).
2) Three setting address method can be selected.
   - ① **Manual setting from wired main remote controller (RBC-AMT21E)**
   - ② **Manual setting from central control remote controller (TCB-SC642TLE)**
   - ③ **Automatic setting from central remote controller (TCB-SC642TLE)**

REQUIREMENT

- **Be sure to reconfirm the following status for all header outdoor units before the central control address setting.**
  - **[1] Check that the relay connectors between [U1,U2] and [U3,U4] terminals are connected in all header outdoor units to which the central control is connected. (At the shipment from factory : No connection of connector)**
  - **[2] SW30-2 should be OFF in all header unit except the header unit with the least line address number. (At the shipment from factory : Set to ON)**
- **Correct address setting can't be conducted without the setting status above mentioned.**
- **The procedure above mentioned should be conducted after address setting of all indoor and outdoor units.**

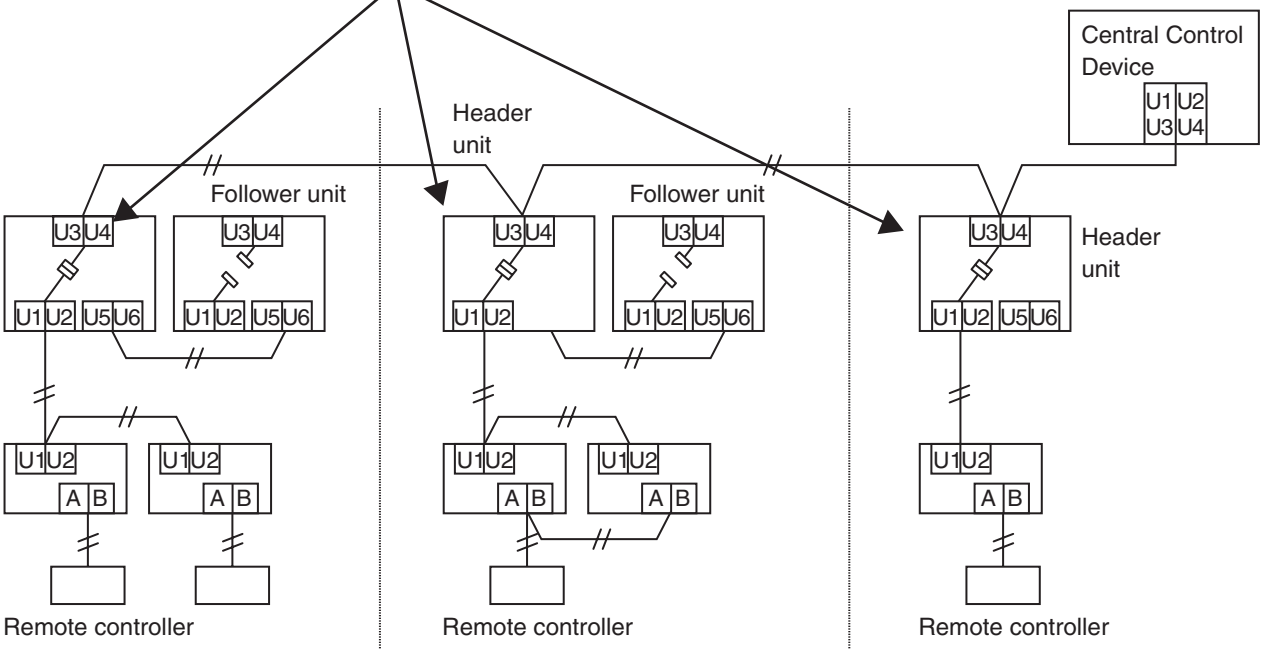

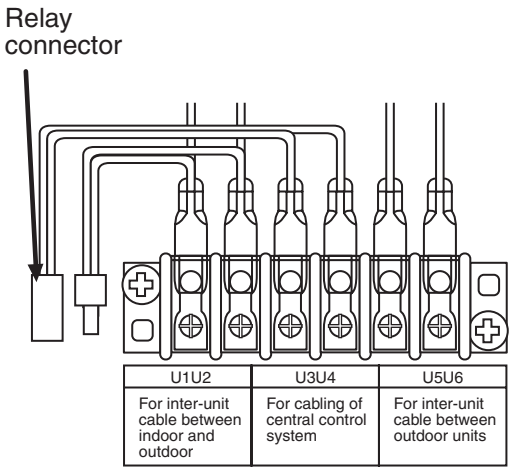

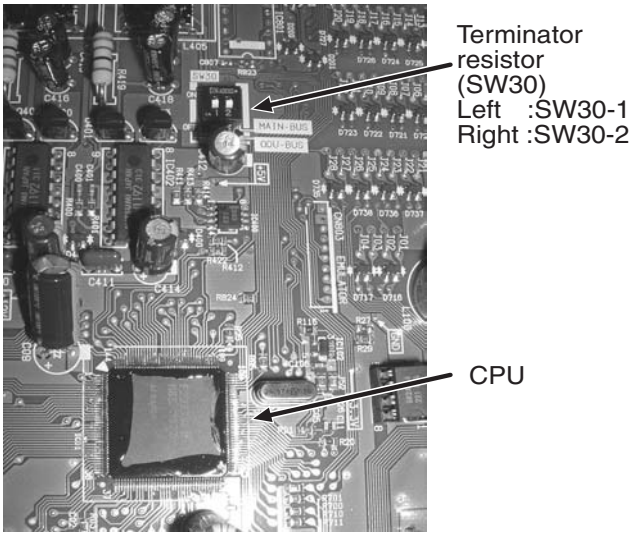

Interface P.C. board on the outdoor unit.

Flow chart of setting central control address (digest)
(In case of central remote controller TCB-SC642TLE)

Completion of indoor unit addresses

Automatic setting?

Yes — Automatic setting

No — Manual setting

Set from wired remote controller?

No — Setting from central remote controller

Yes — Setting from wired remote controller

Method③

Automatic setting from central remote controller (TCB-SC642TLE)

(1) Press the [ ] and [ZONE] buttons at the same time for more than 4 sec.
(2) Select CODE No. C2 by pressing setup temp. [▲] [▼] buttons.
(3) Press the [SET] button. ("C2" changes from flashing to ON state and automatic setting will start.)
(4) Finishing automatic setting, SETTING changes from flashing to OFF.
(5) Press the [ ] button.
(6) SETTING flashes for a few minutes, then OFF.

Method②

Manual setting from central remote controller (TCB-SC642TLE)

(1) Press the [ ] and [ZONE] buttons at the same time for more than 4 sec.
(2) Set CODE No. to C1 using setup temp. [▲] [▼] buttons.
(3) Press the [SET] button.
(4) Select the zone and group No. with [ZONE] and [◀] [▶] (Group) buttons.
(5) Set the Unit No. (Indoor and line address) with [ ] and [ ] buttons.
(6) Press the [SET] button.
(7) Register the other Unit No. in the same way following the steps (4) to (6).
(8) Press the [ ] button.
(9) SETTING flashes for a few minutes, then OFF.
(10) End

Method①

Manual setting from wired remote controller (RBC-AMT21E)

(1) Press the [ ] and [ ] buttons at the same time for more than 4 sec. (Don't press [UNIT] button.)
(2) Set CODE No. to 03 using setup temp. [▲] [▼] buttons.
(3) Set the central control address using timer [▲] [▼] buttons.
(4) Press the [SET] button to register the address. (SETTING indications changes from flashing to ON state.)
(5) Press the [ ] button.
(6) SETTING indications changes from ON state to flashing. (approx. 1 minute.)
(7) End

VRF* system?

No — 1 by 1 model (Digital Inverter / Super Digital Inverter)

Yes — *Super MMS / Super HRM

Checking duplication of central control address.

(1) Press [ ] button three times.
If any duplication is discovered, error code "L20" is displayed.
- Wired remote controller : Displayed promptly.
- Central remote controller : Max. 4 min. later.

Checking from central remote controller for duplication of central control address

(1) Press the [ ] and [ZONE] buttons at the same time for more than 4 sec.
(2) Select CODE No. C3 using setup temp. [▲] [▼] buttons.
(3) Press the [SET] button.
(4) SETTING indication flashes and central control address duplicated error check starts.
(5) The check is completed when CODE No. C3 flashes and SETTING goes off.
(6) If any duplication is discovered, the GROUP No. will flash.
The central control address is cleared by selecting the data where GROUP No. is flashing and by pressing the [CL] button.
Set the correct central control address.

Duplication?

Yes (Duplication is discovered.)

No (No duplication) — End

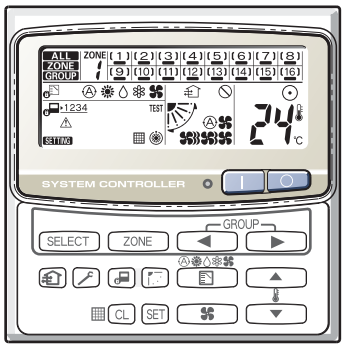

▲ Central remote controller (TCB-SC642TLE)

(For detailed setting procedure, refer to installation manual attached central control devices.)

4-3-1 (9) Trial operation for central controller (TCB-SC642TLE)

1 Test run of the central controller

(1) Power on for all indoor units. Next, power on for central controller.
SETTING will flash, checking the indoor unit address automatically.

(2) If group No. displayed on central controllers is not same as indoor unit No.*
* In case of group control, main unit No. only.

2 How to perform an air conditioner test run

(1) Hold down the button of the central controller for at least four seconds.
- During the test run, “TEST” appears on the LCD display.

(2) Press the O and I buttons.
- The temperature cannot be adjusted at the “TEST” position.
  Do not use this procedure except when performing a test run since it will strain the equipment.

(3) Upon completion of the operation, press the button, and check that “TEST” on the LCD display has gone off.

4-3-1 (10) Automatic address setting (for reference)

⚠ CAUTION

In case to decide address (Line / Group / Indoor address) by automatic address setup, be sure to change these address to match the address setting table for TCS-NET control system.

→ "4-3-1 (2) Manual setting from wired remote controllr",

→ "4-3-1 (13) Address change from remote controller"

If unmatched address is allocated, a problem such as error of communication with air conditioner will occur.

Address setup flow (In case automatic address setup)

Setting flow	Contents	Reference No.
Line addrss setting	Line address settting	4-3-1
↓		
Power - ON	Check at Power-ON	4-3-1
↓		
Automatic address setting	Refer to this section "4-3-1 (10)	
↓		
Trial operation	Trial operation	4-3-1 (6)
↓		
Manual address setting or Address change from remote controller	Manual setting from remote controller Address change from remote controller	4-3-1 (2) 4-3-1 (13)
↓		
Setup of relay connector and SW30-2	Setup of relay connector and terminator	4-3-1 (7)
↓		
Central controller exist ?		
↓		
Central control device setting	Central control address setting	4-3-1 (8)
↓		
Trial operation (Central control device)	Test run for central controller	4-3-1 (9)
↓		
TCS-NET control system address setting Intelligent server TCS-NET relay I/F Energy monitoring I/F Digital I/O relay I/F	Address setting for TCS-NET control system	4-4
↓		
Trial operation for Touch panel controller		Chapter. 5

• Automatic address setup procedure

Without central control : To the address setup procedure 1
With central control : To the address setup procedure 2

(However, go to the procedure 1 when the central control is performed in a single refrigerant system.)

(Example)	In case of central control in a single refrigerant system	In case of central control over refrigerant system
Address setup procedure	**To procedure 1**	**To procedure 2**
Cable systematic diagram	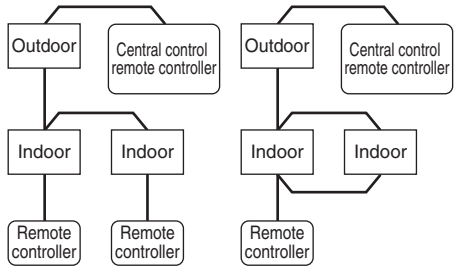	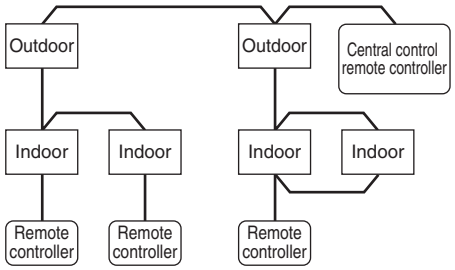

Address setup procedure 1

1. Turn on power of indoor/outdoor units.
   (In order of indoor → Outdoor)
2. After approx. 1 minute, check that U. 1. L08 (U. 1. flash) is displayed in 7-segment display section on the interface P.C. board of the header outdoor unit.
3. Push SW15 and start setup the automatic address. (Max. 10 minutes for 1 refrigerant system (Usually, approx. 5 minutes))
4. When the count Auto 1 → Auto 2 → Auto 3 is displayed in 7-segment display section, and it changes from
   U. 1. - - - (U. 1. flash) to U. 1. - - - (U. 1. light),
   the setup finished.
5. **When perform a central control, connect a relay connector between [U1, U2] and [U3, U4] terminals in the header unit.**

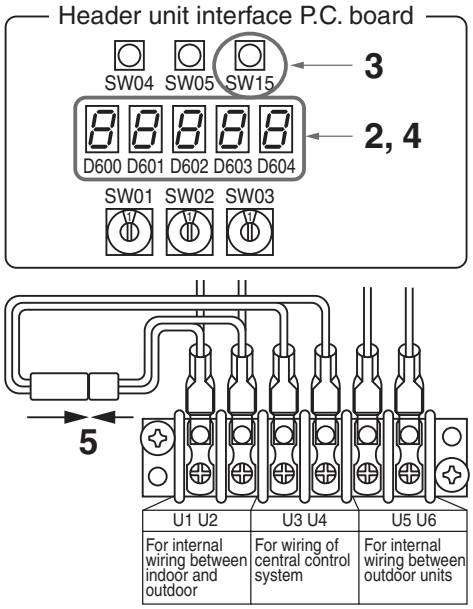

REQUIREMENT

- When a group control is performed over the multiple refrigerant systems, be sure to turn on the power supplies of all the indoor units connected in a group in the time of address setup.
- If turning on the power for each refrigerant system to set up address, a header indoor unit is set for each line. Therefore, an alarm code "L03" (Duplicated indoor header units) is output in operation after address setup. In this case, change the group address from the wired remote controller so that only one header indoor unit is set up.

(Example)	Group control over multiple refrigerant systems
Wiring systematic diagram	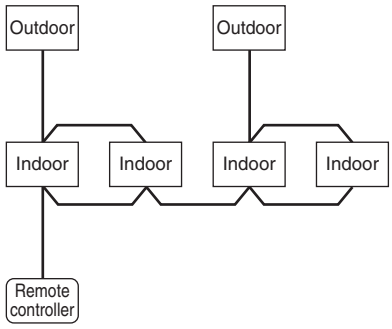

Address setup procedure 2

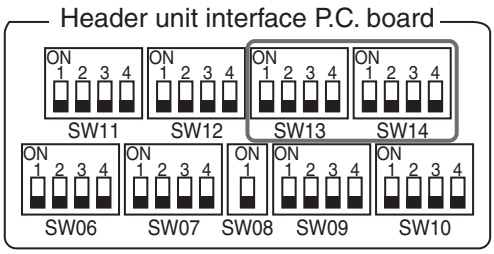

1. Using SW13 and 14 on the interface P.C. board of the header outdoor unit in each system, set up the line (system) address for each system.
   (At shipment from factory: Set to Address 1)

Note) Be careful not to duplicate with other refrigerant system.

Line (system) address switch on outdoor interface P.C. board **(O: Switch ON, × : Switch OFF)**

Line address	SW13				SW14			
	1	2	3	4	1	2	3	4
1				×	×	×	×	×
2				×	O	×	×	×
3				×	×	O	×	×
4				×	O	O	×	×
5				×	×	×	O	×
6				×	O	×	O	×
7				×	×	O	O	×
8				×	O	O	O	×
9				×	×	×	×	O
10				×	O	×	×	O
11				×	×	O	×	O
12				×	O	O	×	O
13				×	×	×	O	O
14				×	O	×	O	O

Line address	SW13				SW14			
	1	2	3	4	1	2	3	4
15				×	×	O	O	O
16				×	O	O	O	O
17				O	×	×	×	×
18				O	O	×	×	×
19				O	×	O	×	×
20				O	O	O	×	×
21				O	×	×	O	×
22				O	O	×	O	×
23				O	×	O	O	×
24				O	O	O	O	×
25				O	×	×	×	O
26				O	O	×	×	O
27				O	×	O	×	O
28				O	O	O	×	O

: Is not used for setup of line address. (Do not change setup.)

2. Check that the relay connectors between [U1U2] and [U3U4] terminals are disconnected in all the header outdoor units to which the central control is connected.
   (At shipment from factory: No connection of connector)
3. Turn on power of indoor/outdoor.
   (In order of indoor → outdoor)
4. After approx. 1 minute, check that 7-segment display is U.1.L08 (U.1. flash) on the interface P.C. board of the header outdoor unit.
5. **Push SW15 and start setup the automatic address.**
   (Max. 10 minutes for 1 refrigerant system
   (Usually, approx. 5 minutes))
6. When the count Auto 1 → Auto 2 → Auto 3 is displayed in 7-segment display section, and it changes from
   U. 1. - - - (U. 1. flash) to U. 1. - - - (U. 1. light) , the setup finished.
7. Procedure 4. to 6. are repeated in other refrigerant systems.
8. How to set up terminator resistor (SW30)
   When all the address setups have finished in the same refrigerant system, put the terminator resistor (SW30) in the same central control line into one.
   - Remain only SW30-2 of the header outdoor unit with the least line address number as it is ON.
     (With terminator resistor)
   - Set up SW30-2 of the other header outdoor units to OFF. (Without terminator resistor)
9. Connect the relay connector between [U1U2] and [U3U4] of the header outdoor unit for each refrigerant system.

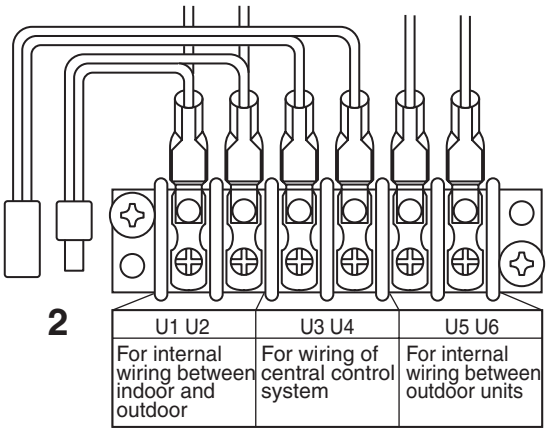

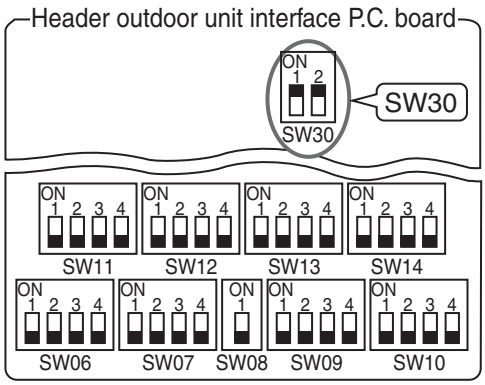

4-3-1 (11) Clearance of address

Method 1

An address is individually cleared from a wired remote controller.

"0099" is set up to line address, indoor address, and group address data from the remote controller.

(For the setup procedure, refer to the abovementioned address setup from the remote controller.)

Method 2

Clear the indoor addresses in the same refrigerant line from the outdoor unit.

1. Turn off the power of the refrigerant system to be returned to the status at shipment, and change the header outdoor unit to the following status.
   1) Remove the relay connector between [U1U2] and [U3U4].
      (If it has been already removed, leave it as it is.)
   2) Turn on SW30-2 on the interface P.C. board of the header outdoor unit if it is ON.
      (If it has been already ON, leave it as it is.)

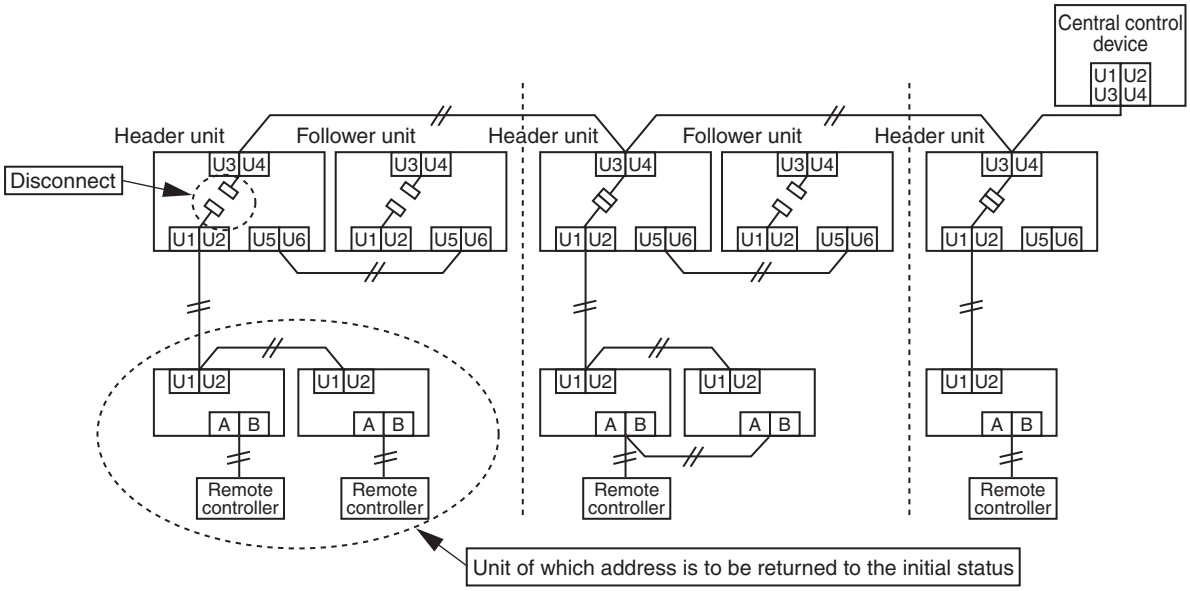

2. Turn on the indoor/outdoor power of which address is to be cleared. After approx. 1 minute, check that "U.1. - - -" is displayed, and then execute the following operation on the interface P.C. board of the header outdoor unit of which address is to be cleared in the refrigerant system.

SW01	SW02	SW03	SW04	Address which can be cleared
2	1	2	After checking that "A.d.buS" is displayed on 7-degment display, and then push SW04 for 5 seconds or more.	Line + Indoor + Group address
2	2	2	After checking that "A.d.nEt" is displayed on 7-degment display, and then push SW04 for 5 seconds or more.	Central control address

3. After "A.d. c.L." has been displayed on 7-degment display, return SW01/SW02/SW03 to 1/1/1.
4. When the address clearing has correctly finished, "U.1.L08" is displayed on 7-degment display after a while. If "A.d. n.G." is displayed on 7-degment display, there is a possibility which is connected with the other refrigerant system. Check again the relay connector between [U1U2] and [U3U4] terminals.

   Note) Be careful that the other line address may be also cleared if clearing operation is not correctly executed.
5. After clearing of the address, set up an address again.

4-3-1 (12) Confirmation of indoor unit address and position by using the remote controller

[Confirmation of indoor unit address and the position]

1. When you want to know the indoor address though position of the indoor unit itself can be recognized;

<Procedure> (Operation while the air conditioner operates)

1 **If it stops, push ⏻ button.**

2 **Push UNIT button.**

The unit NO 1- 1 is displayed on the LCD. (Disappears after several seconds) The displayed unit No indicates the line address and indoor address. (If there is other indoor unit connected to the same remote controller (Group control unit), other unit No is displayed every pushing UNIT button.)

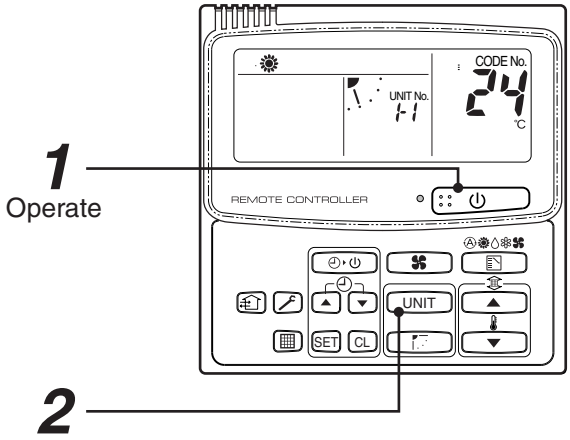

Operation procedure

1 → ***2***

2. When you want to know position of the indoor unit using the address

- To confirm the unit numbers in a group control;

<Procedure> (Operation while the air conditioner stops)

The indoor unit numbers in a group control are successively displayed, and the corresponding indoor fan is turned on. (Operation while the air conditioner stops)

1 **Push + buttons simultaneously for 4 seconds or more.**

- Unit No ALL is displayed.
- The fans of all the indoor units in a group control are turned on.

2 **Every pushing UNIT button, the indoor unit numbers in the group control are successively displayed.**

- The firstly displayed unit No indicates the address of the header unit.
- Only fan of the selected indoor unit is turned on.

3 **Push button to finish the procedure.**

All the indoor units in group control stop.

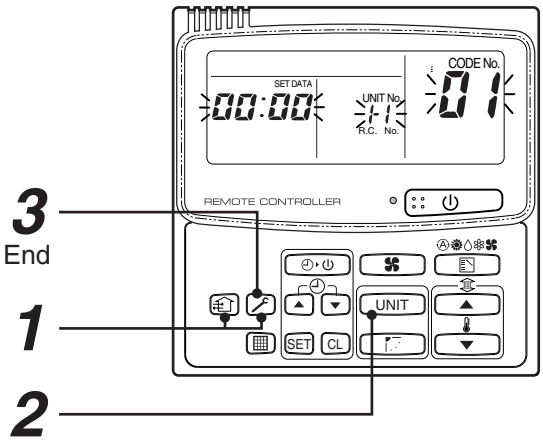

Operation procedure

1 → ***2*** → ***3*** **End**

- **To confirm all the unit numbers from an arbitrary wired remote controller;**

<Procedure> (Operation while the air conditioner stops)

The indoor unit No and position in the same refrigerant piping can be confirmed. An outdoor unit is selected, the indoor unit numbers in the same refrigerant piping are successively displayed, and then its indoor unit fan is turned on.

1 Push the timer time ▼ + 🔧 buttons simultaneously for 4 seconds or more.

Firstly, the line 1, **item code** AC (Address Change) is displayed. (Select outdoor unit.)

2 Using UNIT + ⊞ buttons, select the line address.

3 Using SET button, determine the selected line address.

- The indoor unit address, which is connected to the refrigerant pipe of the selected outdoor unit is displayed and the fan is turned on.

4 Every pushing UNIT button, the indoor unit numbers in the identical pipe are successively displayed.

- Only fan of the selected indoor unit operates.

[To select another line address]

5 Push CL button to return to procedure 2.

- The indoor address of another line can be successively confirmed.

6 Push 🔧 button to finish the procedure.

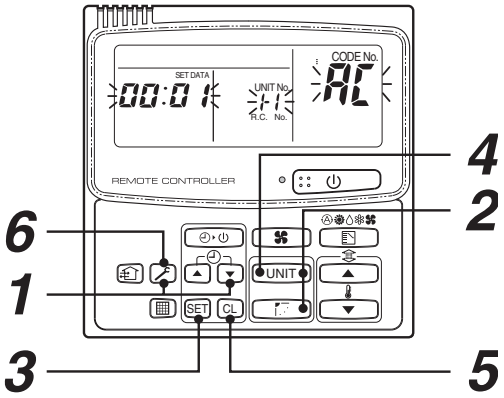

Operation procedure

1 → ***2*** → ***3*** →
4 → ***5*** → ***6*** **End**

4-3-1 (13) Address change from remote controller

Change of indoor address from wired remote controller

- **To change the indoor address in individual operation (Wired remote controller : Indoor unit = 1 : 1) or group control** (When the setup operation with automatic address has finished, this change is available.)

<Procedure> (Operation while air conditioner stops)

1 Push simultaneously SET + CL + 🔧 buttons for 4 seconds or more.

(The firstly displayed unit No indicates the header unit in group control.)

2 In group control, select an indoor unit No to be changed by UNIT button.

(The fan of the selected indoor unit is turned on.)

3 Using the setup temp. ▲ / ▼ buttons, set 13 to the item code.

4 Using the timer time ▲ / ▼ buttons, change the displayed setup data to a data which you want to change.

5 Push SET button.

6 Using the UNIT button, select the unit No. to be changed at the next time. Repeat the procedure *4* to *6* and change the indoor address so that it is not duplicated.

7 After the above change, push UNIT button to confirm the changed contents.

8 If it is acceptable, push 🔧 button to finish confirmation.

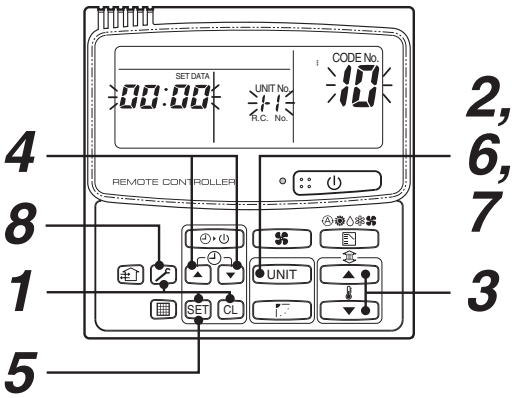

Operation procedure

1 → ***2*** → ***3*** → ***4*** →
5 → ***6*** → ***7*** → ***8*** **End**

- **To change all the indoor addresses from an arbitrary wired remote controller;**

(When the setup operation with automatic address has finished, this change is available.)

Contents : Using an arbitrary wired remote controller, the indoor unit address can be changed for each same refrigerant system

∗ **Change the address in the address check/change mode.**

<Procedure> (Operation while air conditioner stops)

1 Push the timer time ▼ + 🔧 buttons simultaneously for 4 seconds or more.

Firstly, the line 1, **item code** AC (Address Change) is displayed.

2 Using UNIT + ⊞ buttons, select the line address.

3 Push SET button.

- The indoor unit address, which is connected to the refrigerant system of the selected outdoor unit is displayed and the fan is turned on.

  First the current indoor address is displayed on the setup data. (Line address is not displayed.)

4 The indoor address of the setup data moves up/down by the timer time ▲ / ▼ buttons.

Change the setup data to a new address.

5 Push SET button to determine the setup data.

6 Every pushing UNIT button, the indoor unit numbers in the identical pipe are successively displayed. Only fan of the selected indoor unit operates.

Repeat the procedure ***4*** to ***6*** and change all the indoor addresses so that they are not duplicated.

7 Push SET button.

(All the displays on LCD go on.)

8 Push 🔧 button to finish the procedure.

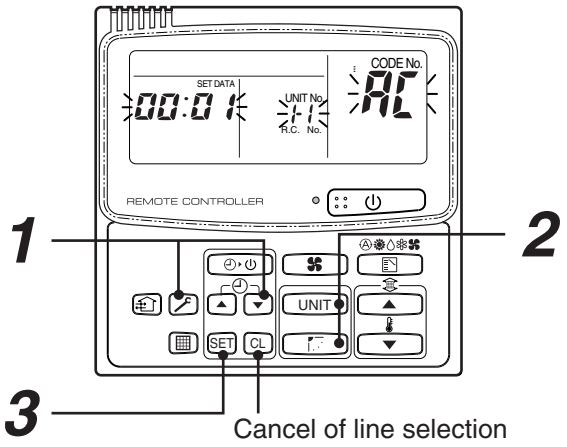

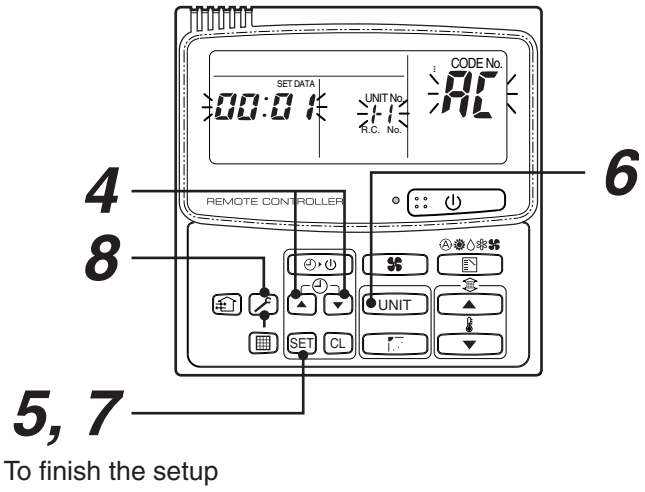

Here, if the unit No is not called up, the outdoor unit in this line does not exist.

Push CL button, and then select a line according to procedure ***2*** .

Operation procedure

1 → ***2*** → ***3*** → ***4*** →
5 → ***6*** → ***7*** → ***8*** **End**

4-3-1 (14) In case of increase the address-undefined indoor units (Extension, etc.)

If set up the indoor address of which address is undefined accompanied with extension of indoor units, replacement of P.C. board, etc, follow to the methods below.

Method 1

Set up an address individually from a wired remote controller.

(Line address, Indoor address, Group address, Central control address)

For the setup method, refer to the above “Manual address setup from remote controller”.

Method 2

Set up an address from the outdoor unit.

∗ Leave the address of the unit of which address has been already set up as it is.
Set up an address only to the unit of which address is undefined.

The addresses are allocated from the low number.

Setup procedure

Arrange the outdoor header units in the refrigerant line to which indoor units are added. (Figure below)

1. Remove the relay connector between [U1U2] and [U3U4].
2. Turn on SW30-2 on the interface P.C. board at outdoor header unit side if it is ON.
   ∗ Turn off the power, and then execute the operation.

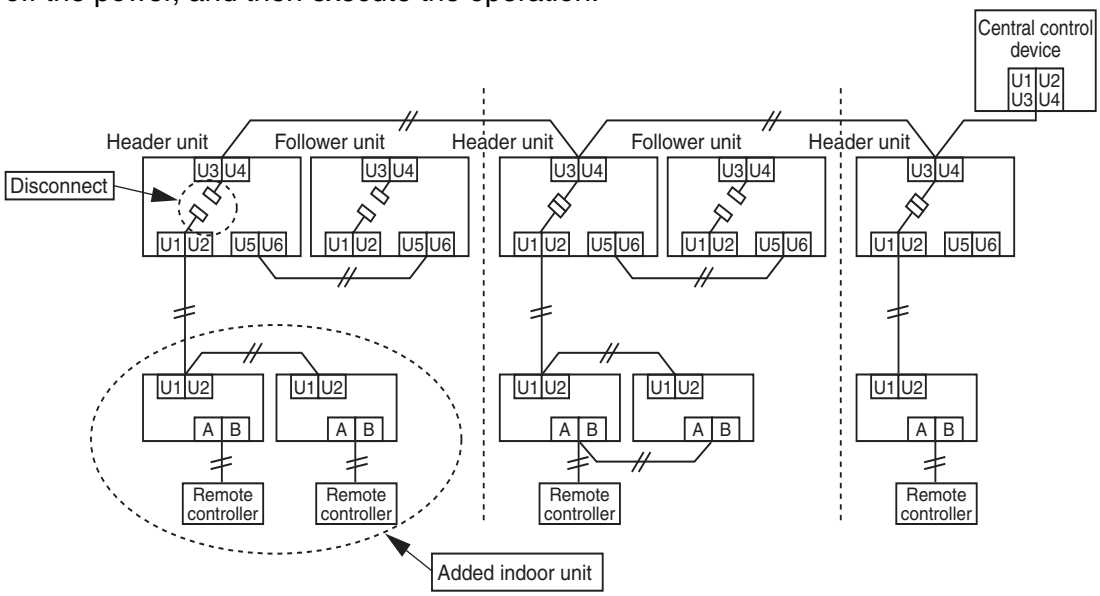

3. Turn on the indoor/outdoor power of which address is to be set up. After approx. 1 minute, check that “U.1.---” is displayed on 7-segment display.
4. Execute the following operation on the interface P.C. board of the header outdoor unit.

SW01	SW02	SW03	SW04
2	14	2	After checking that “In.At” is displayed on 7-segment display, and then push SW04 for 5 seconds or more.

“AUTO1” → “AUTO2” → “AUTO3” … is counted and displayed on 7-degment display.

5. When “U.1. - - -” is displayed on 7-segment display, the setup operation finished.
   Turn off the indoor/outdoor power.
6. Return the following setup as before.
   - Relay connector
   - SW30-2
   - SW01, 02, 03

4-3-1 (15) Address setup example (VRF system)

[Automatic address / Manual address setup example]

Individual control

Automatic address setting		Available		Available	
Outdoor	Line address	1		1	
Configuration		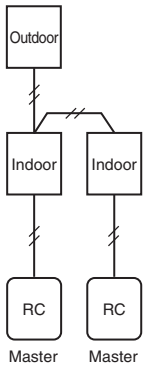		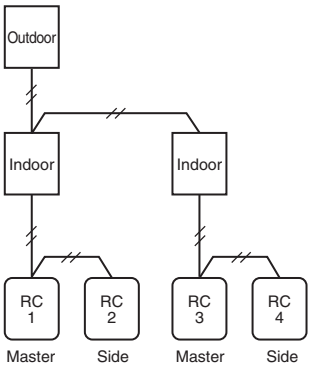	
Indoor	Line address	1	1	1	1
	Indoor unit address	1	2	1	2
	Group address	0	0	0	0

* RC: Remote controller

Automatic address setting		Available		Available		Available	
Outdoor	Line address	1		1		1	
Configuration		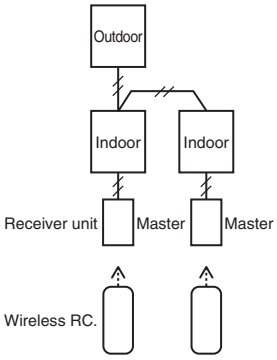		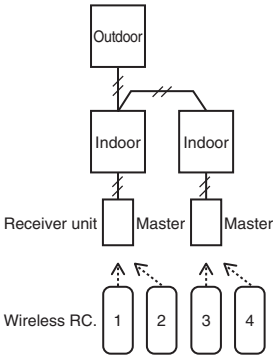		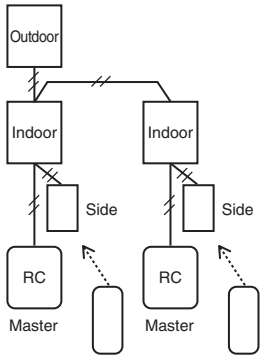	
Indoor	Line address	1	1	1	1	1	1
	Indoor unit address	1	2	1	2	1	2
	Group address	0	0	0	0	0	0

Group control

Automatic address setting		Available		Available		Available	
Outdoor	Line address	1		1		1	
Configuration		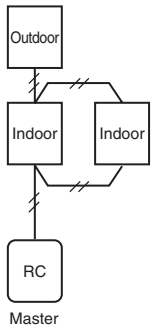		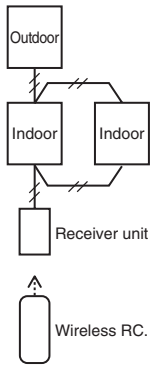		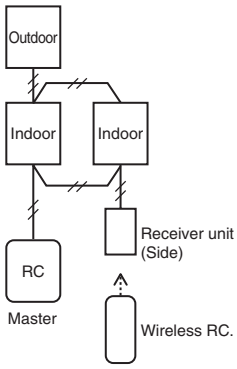	
Indoor	Line address	1	1	1	1	1	1
	Indoor unit address	1	2	1	2	1	2
	Group address	1	2	1	2	1	2

Central control (Multiple refrigerant systems)

Automatic address setting		Available				Available			
Outdoor	Line address	1		2		1		2	
Configuration		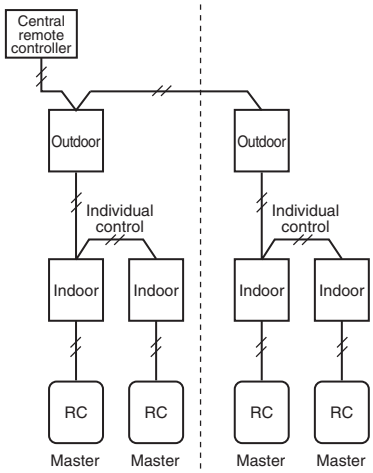				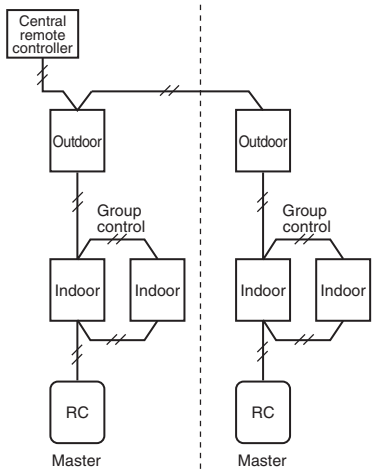			
Indoor	Line address	1	1	2	2	1	1	2	2
	Indoor unit address	1	2	1	2	1	2	1	2
	Group address	0	0	0	0	1	2	1	2

Group control over other R.C. group/indoor names)

Automatic address setting		Available (*1)						
Outdoor	Line address	1		2			1	
Configuration		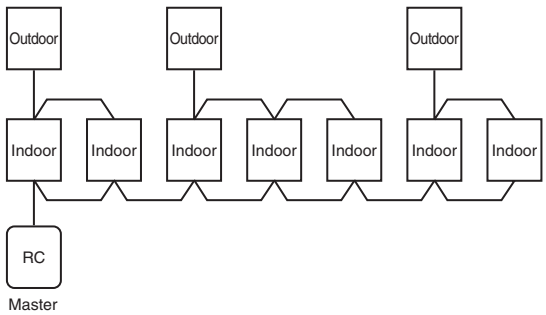						
Indoor	Line address	1	1	2	2	2	3	3
	Indoor unit address	1	2	1	2	3	1	2
	Group address	1	2	2	2	2	2	2

	Group address	1	2	1 → 2*	2	2	1→ 2*	2

→ It is necessary to change the group address as marked with * when an automatic address setting is conducted under condition of power-ON only in the refrigerant system in which address set up.

*1
In case of group control over refrigerant systems, automatic address setting is available only when all indoor units connected to a group control are turned on during address setting.

If an automatic address setting is conducted under condition of power-ON only in the refrigerant system in which address set up, it will cause the error code “L03” (Duplicated indoor header units) because indoor header units exit for each refrigerant system. In this case, change the group address by the wired remote controller so that only one indoor unit becomes the header unit in one group control.

Automatic address setting		Available (*1)						
Outdoor	Line address	1		2			1	
Configuration		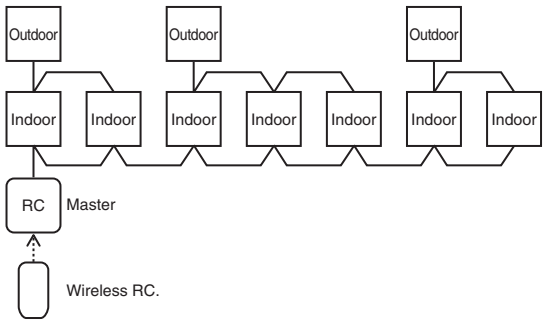						
Indoor	Line address	1	1	2	2	2	3	3
	Indoor unit address	1	2	1	2	3	1	2
	Group address	1	2	2	2	2	2	2

	Group address	1	2	1 → 2*	2	2	1 → 2*	2

→ It is necessary to change the group address as marked with * when an automatic address setting is conducted under condition of power-ON only in the refrigerant system in which address set up.

*1
In case of group control over refrigerant systems, automatic address setting is available only when all indoor units connected to a group control are turned on during address setting.

If an automatic address setting is conducted under condition of power-ON only in the refrigerant system in which address set up, it will cause the error code “L03” (Duplicated indoor header units) because indoor header units exit for each refrigerant system. In this case, change the group address by the wired remote controller so that only one indoor unit becomes the header unit in one group control.

4-3-2 Setting for 1 by 1 system

4-3-2 (1) Address re-setup

POINT 1

When controlling the super-digital inverter and the digital inverter, the adaptor named “1:1 model” connection interface (TCB-PCNT30TLE) is necessary.

1. Cabling connection of control wiring

Attach an adaptor per 1 group in group control operation (including individual control).
Connect the adaptor to the header indoor unit in the group control. (For details, see ***POINT 3***.)

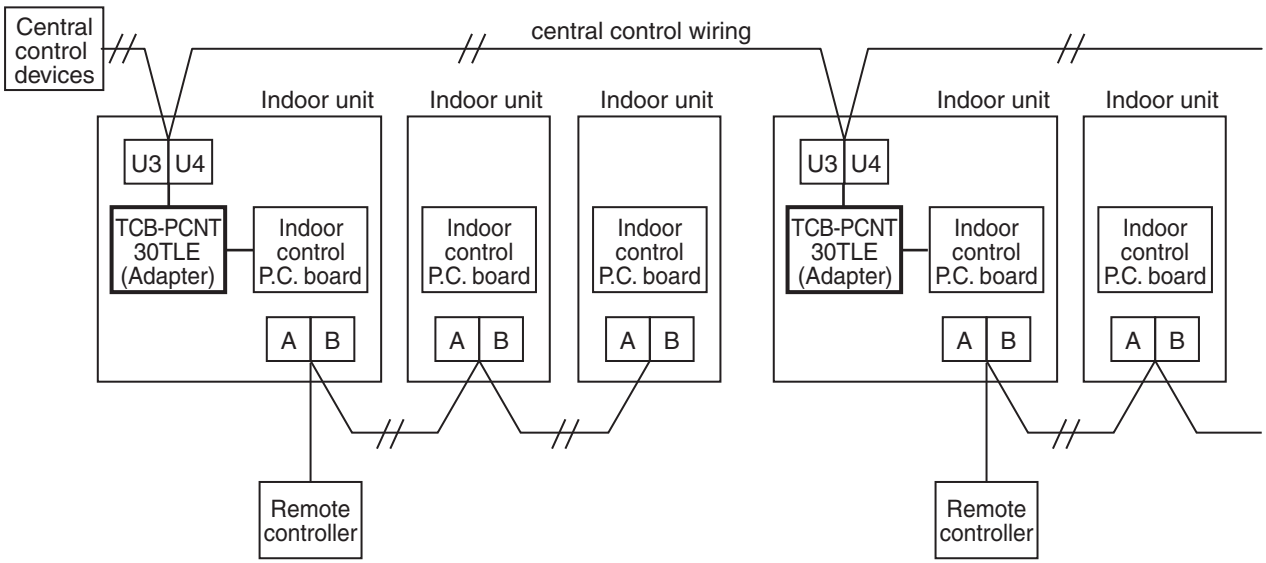

2. Cabling connection diagram with indoor control P.C. board

• For details, refer to Installation Manual.

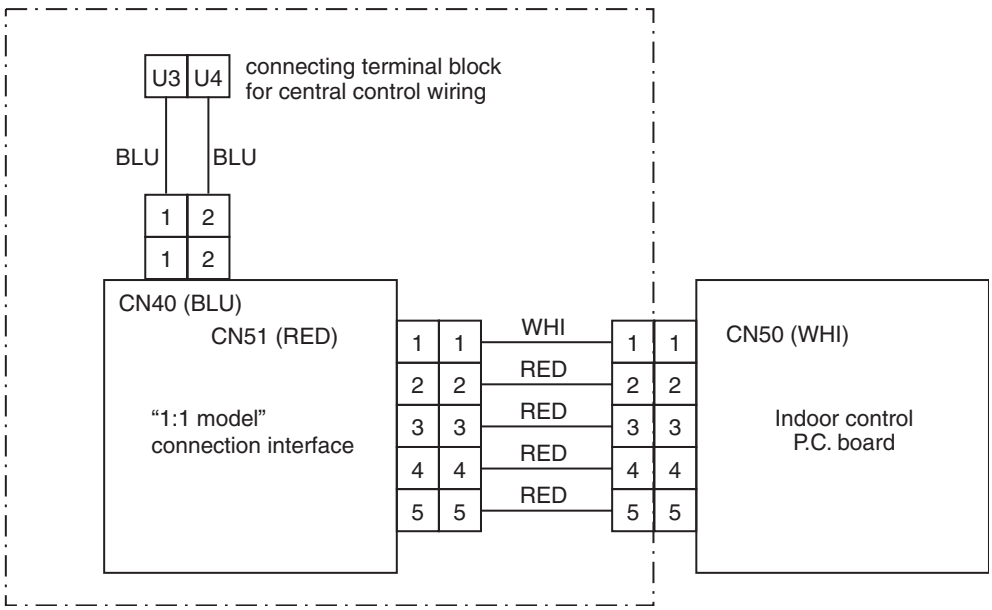

• Parts included in the single-point chain line are optional accessories.
• There is non-polarity on the cables connected to U3 and U4 terminals.

POINT 2

After automatic address setup, it is necessary to change the line address from the wired remote controller for each system. (Manual re-setup)

Reason : After automatic address setup, all the line addresses become “1” except a group control and then a duplicated address error “E08” is output.

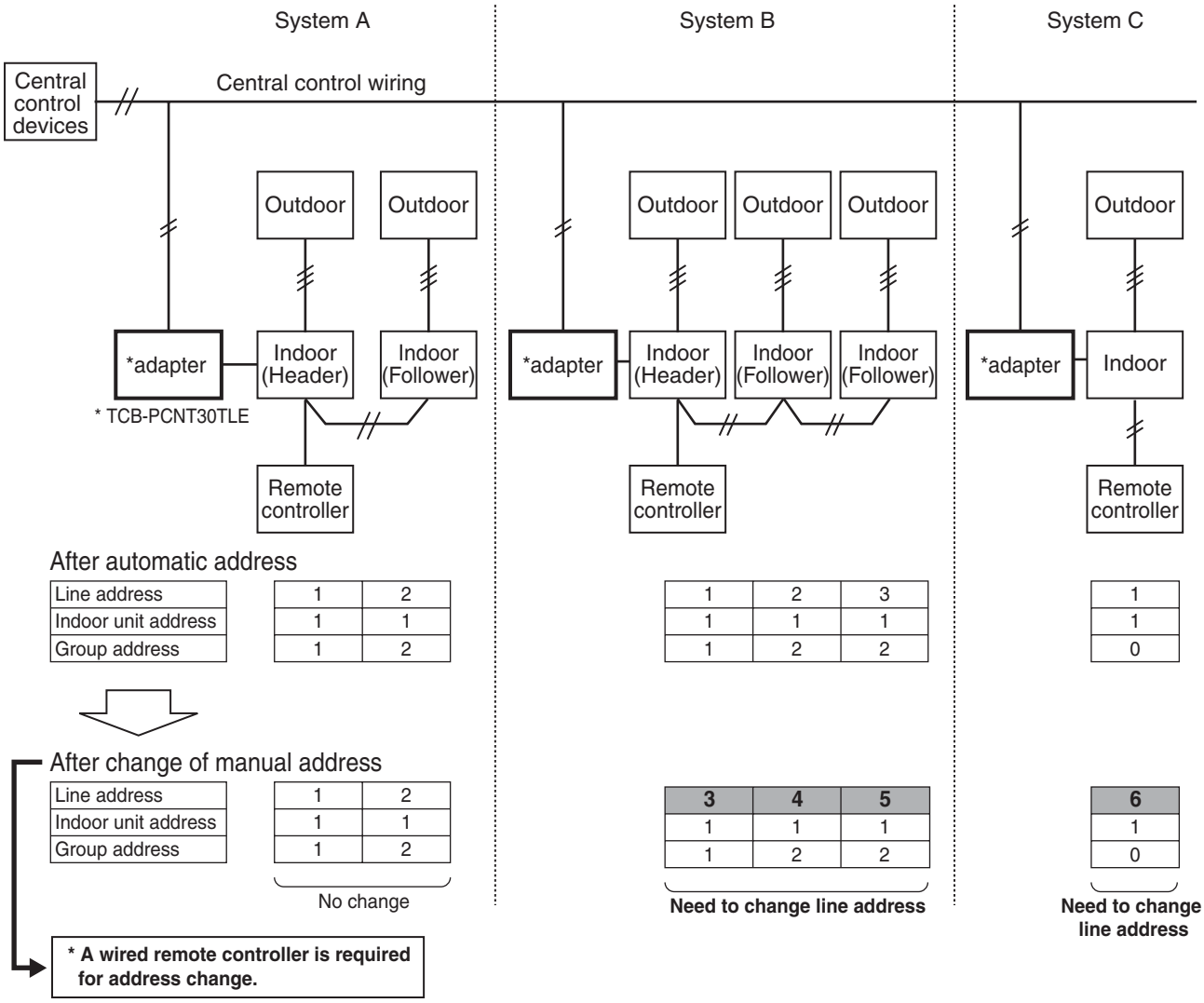

- Set up a line address for each refrigerant system.
- Set up a line address so that it is not duplicated with other systems.
  (If the central control is conducted with VRF systems, set up a line address so that it is not also duplicated with line address of VRF systems.)
- When performing a central control over 30 systems, the address setup method is necessary to be changed.
  (including VRF system)

POINT 3

When the central control is performed for indoor units of twin control in a group control, it may be required to change the group address. (Adapter is attached to the header indoor unit.)

Reason : The central control device communicates with individual indoor unit, header indoor unit of the group control, and header indoor unit of twin control. However, as the address is automatically set up, which unit will become the header unit is indefinite. Therefore if the unit attached with adapter would not become the header indoor unit, a central control is unavailable.

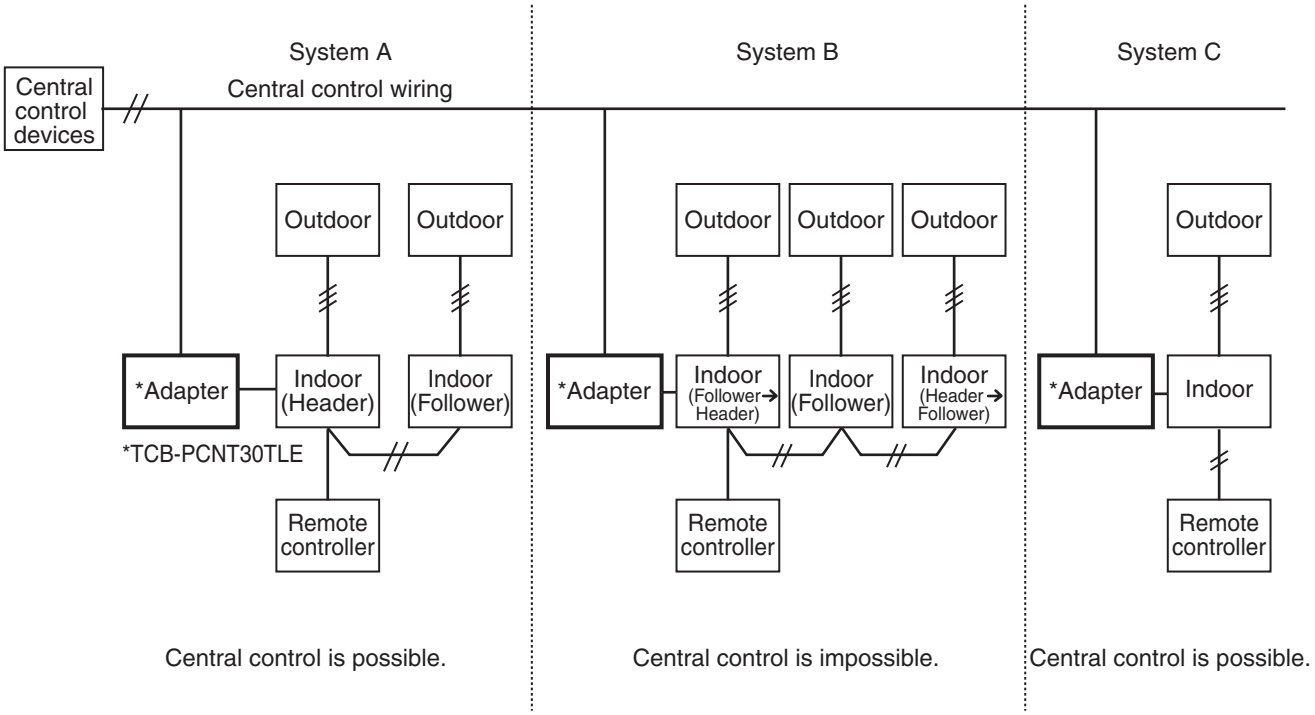

Line address	⇨	1	2	3	4	5	6
Indoor unit address	⇨	1	1	1	1	1	1
Group address	⇨	1	2	2 ⇨ 1	2	1 ⇨ 2	0

*** A wired remote controller (RBC-AMT21E) is required for address change.**

How to check group address (Header/Follower indoor unit setup)

* Check the group address after confirming which unit is attached with the adapter.

<Procedure> Operation while air conditioner stops.

1 **Push SET + CL + 🔧 buttons simultaneously for 4 seconds or more.**

2 **The indoor unit in which the fan is turned on is the header indoor unit.**

⇩

Indoor unit in which the fan is turned on = Indoor unit with the adapter : To ***Case 1***
Indoor unit in which the fan is turned on ≠ Indoor unit with the adapter : To ***Case 2***

Case 1

(In case that the indoor unit in which the fan is turned on and the unit with the adapter are same)

3 **As the central control is available, push [🔧] button. (Setup is determined.)**

When pushing the [🔧] button, the display disappears and the status returns to the normal stop status.
(The operation on the remote controller is not accepted for approx. 1 minute after the [🔧] button has been pushed.)
If the operation on the remote controller is not accepted for 1 minute or more after [🔧] button has been pushed, an incorrect address setup is considered.
In this case, automatic address is performed again. After approx. 5 minutes or more, and set up again the group address from <procedure 1>.

Case 2

(In case that the indoor unit in which the fan is turned on and the unit from <procedure 1> with the adapter are different)
As the central control is unavailable, change the address in the following procedure.

<Indoor unit without the adapter : Header indoor unit → Follower indoor unit.>

3 **Using the setup temp [▲] + [▼] buttons, select Item code 14.**

4 **Check the setup data is 0001 and change the setup data from 0001 to 0002 using the timer [▲] + [▼] buttons.**

5 **Push the [SET] button. In this time, the setup has finished if the display changes from flashing to lighting.**

<Indoor unit with the adapter : Follower indoor unit → Header indoor unit.>

6 **Push the [UNIT] button to turn on the fan of the indoor unit attached with the adaptor.**

7 **Using the setup temp [▲] + [▼] buttons, select Item code 14.**

8 **Check the setup data is 0002 and change the setup data from 0002 to 0001 using the timer [▲] + [▼] buttons.**

9 **Push the [SET] button.**

<Reconfirmation of re-set up>
In this time, the setup has finished if the display changes from flashing to lighting.

10 **When the above setup operation has finished, push the [UNIT] button to select the indoor unit of which setup has been changed. Using the setup temp [▲] + [▼] buttons, specify the Item code 14 and check the changed contents.**

Pushing the [CL] button enables to clear the setup contents until now.
(In this case, repeat the procedure from ***1***.)

11 **Push [🔧] button. (Setup is determined.)**

When pushing the [🔧] button, the display disappears and the status returns to the normal stop status.
(The operation on the remote controller is not accepted for approx. 1 minute after the [🔧] button has been pushed.)

If the operation on the remote controller is not accepted for 1 minute or more after [🔧] button has been pushed, an incorrect address setup is considered.
In this case, automatic address is performed again. After approx. 5 minutes or more set up again the group address from <procedure ***1***>.

4-3-2 (2) Indoor address change example

1 In case of central control up to 29 refrigerant systems (including No. of VRF systems)

■: adapter
("1:1 model" connection interface TCB-PCNT30TLE)

POINT 1) Change the line address for each refrigerant system.

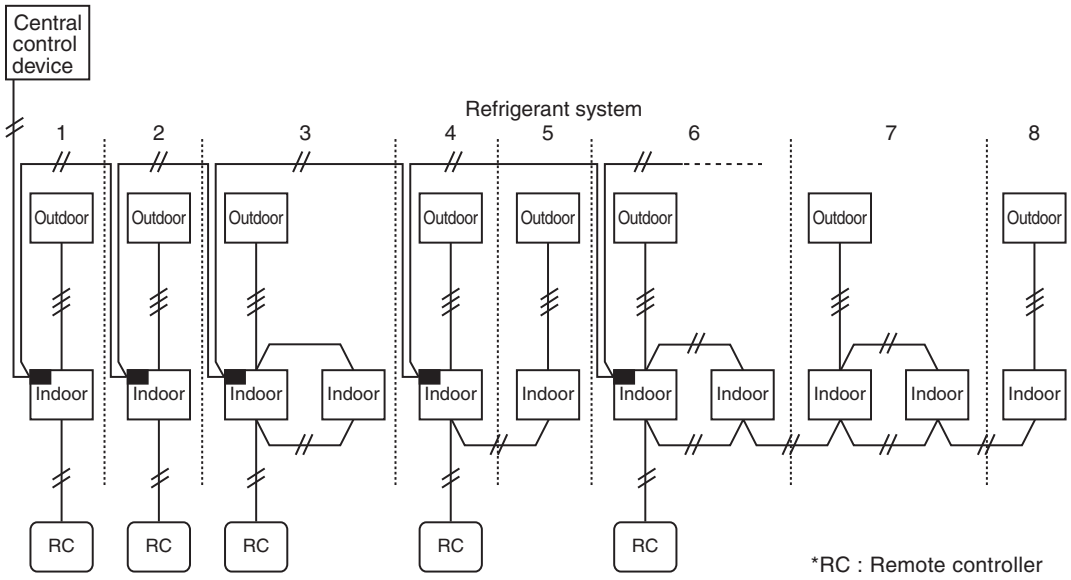

Line address	1	① 1→2	① 1→3	① 1→3	① 1→4	① 2→5	① 1→6	① 2→6	① 2→7	① 2→7	① 3→8
Indoor unit address	1	1	1	2	1	1	1	3→2	1	2	1→2
Group address	0	0	1	2	1	2	1	2	2	2	2

Change the line address on wired remote controller after automatic address setting.

Automatic address is impossible. Set up again an address manually on wired remote controller.

2 In case of central control over 30 refrigerant systems (including No. of VRF systems if any)

* Change operation is same to the above 1 up to 29th refrigerant system.

■: adapter (“1:1 model” connection interface TCB-PCNT30TLE)

POINT 1) Set all the line addresses to 30 for all indoor units attached with the adapter.

POINT 2) Change the indoor address so that the indoor unit address numbers are not duplicated.

POINT 3) When the indoor unit with adaptor is in twin or triple control, change also the line address of the follower indoor unit to 30.

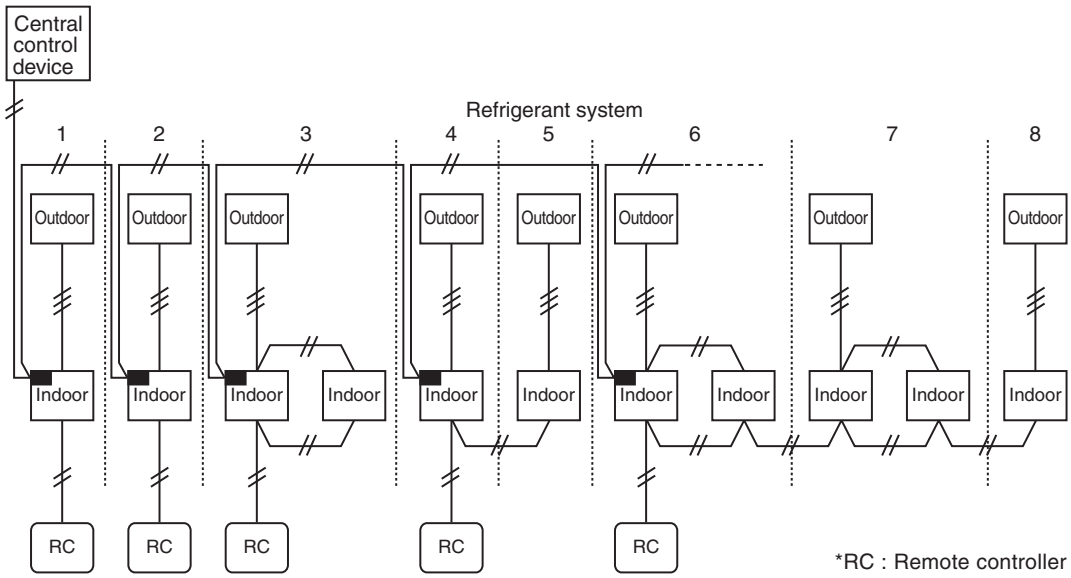

Line address	① 1→30	① 1→30	① 1→30	③ 1→30	① 1→30	2	① 1→30	① 2→30	2	2	3
Indoor unit address	1	② 1→2	② 1→3	② 1→4	② 1→5	1	② 1→6	② 3→7	1	2	1→2
Group address	0	0	1	2	1	2	1	2	2	2	2

Change the line address on wired remote controller after automatic address setting.

Automatic address is impossible. Set up again an address manually on wired remote controller.

4-4 Address setting for Control System devices

4-4-1 address setting flow

⚠ CAUTION

Before setting for TCS-NET air conditioning system, be sure to complete address setting and trial operation of each air conditioning system.

(Address setting --- Line/Group/indoor unit address, central control address if central controller exists
Trial operation --- Test operation should be performed in each refrigerant system one by one.)

Setting flow	Contents	Reference No.
Intelligent Server setting	CF card mounting, Dip switch setting	4-4-2
TCS-Net relay I/F setting	Address setting (SW01 on P.C. Board, address 1 to 8) Terminator Resistor setting (SW06 on P.C. Board)	4-4-3
Energy monitoring exist ?		
Energy monitoring relay I/F setting	Address setting (SW01 on P.C. Board, address 1 to 4)	4-4-4
Digital I/O relay I/F exist ?		
Digital I/O Relay I/F setting	Address setting (SW01 on P.C. Board, address 1 to 4)	4-4-5
Power ON (Trial Operation)		Chapter. 5

4-4-2 Setting for Intelligent server

Installing CF (Compact Flash) card

Insert the attached CF (Compact Flash) card fully into the CF (Compact Flash) card slot on the side of the Intelligent Server.

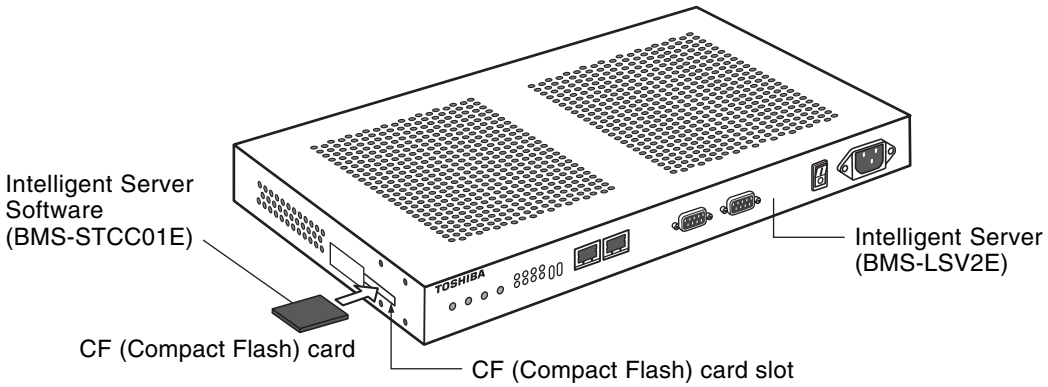

REQUIREMENT

- Do not insert or remove the CF (Compact Flash) card during power on of the Intelligent Server. Doing so may cause a failure.
- If the CF (Compact Flash) card is not inserted properly, the Intelligent Server will not work.

RS-485 operation mode setting

The RS-485 mode set switch is provided on the bottom board of the Intelligent Server.
Set the switch as follows:

1	2	3	4
OFF	ON	ON	OFF

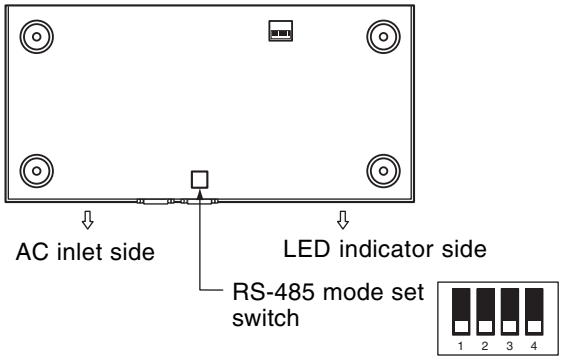

NOTE

If the RS-485 mode set switch is set incorrectly, the Intelligent Server will not work.

1	ON	A terminator resistor is connected between TX(+) and TX(-).
	OFF	No terminator resistor is connected between TX(+) and TX(-).
2	ON	A terminator resistor is connected between RX(+) and RX(-).
	OFF	No terminator resistor is connected between RX(+) and RX(-).
3	ON	Half-duplex mode (Note 1)
	OFF	Full-duplex mode (Note 2)
4	Not used	

(Note 1) Transmit data sent from the Intelligent Server is not received by the same server during transmission.
(Note 2) Transmit data sent from the Intelligent Server is also received by the same server during transmission.

4-4-3 Setting for TCS-NET relay interface

The following settings are necessary to use TCS-NET Relay Interfaces.

- SW1 TCS-NET Relay Interface address set switch
  When two or more TCS-NET Relay Interfaces are used, set a different address for SW1 to avoid address duplication.
  Assign addresses in an ascending order.

⚠ CAUTION

- **Set relay interface addresses according to the air conditioner address table.**
  For the relay interface whose address SW1=1, perform terminator resistor setting.
- **When the SW1 setting has been changed, push the reset switch SW7. The new address setting is read.**

- SW2 Test switch
- SW3 Test switch
- SW4 Test switch
  Not used during operation.
  Set these switches to zero (0) or “all OFF”.
- SW5 RS-485 terminator resistor select switch
  Set “120 ohm" only when the relay interface address SW=1, and set “open” for other relay interfaces.
- SW6 Main BUS terminator resistor select switch
  The Main BUS terminator resistor is set on the air conditioner side. Set SW6 to “open”.
- SW7 Reset switch
  When performing an address setting with SW1, push this reset switch after the address setting to read the set value.

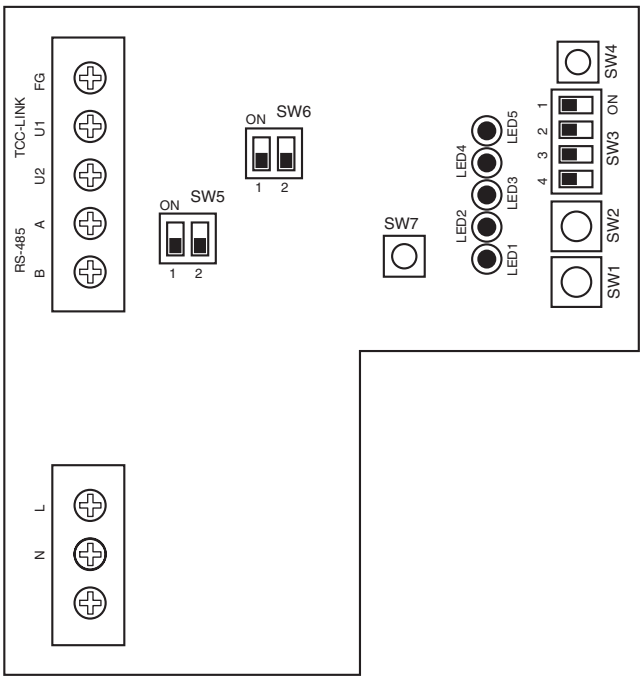

SW1	Relay interface address set switch			
	1-8	Relay interface address		
	0, 9-F	Not used		
SW2	Test switch (0 usually)			
SW3	Test switch (all OFF usually)			
SW4	Test switch			
SW5	RS-485 terminator resistor select switch			
	ON 1 2	ON 1 2	ON 1 2	ON 1 2
	60 ohm	120 ohm	120 ohm	Open
SW6	Main BUS Terminator resistor select switch			
	ON 1 2	ON 1 2	Note:Bit 2 is not used.	
	100 ohm	Open		
SW7	Reset switch			
LED1	Power indicator			
LED2	RS-485 communication status indicator			
LED3	Main BUS Communication status indicator			
LED4	Main BUS Communication error indicator			
LED5	Test indicator			

REQUIREMENT

- **RS-485 terminator resistor select switch SW5.**
  Set “120 ohm” only when the TCS-NET Relay Interface address SW=1, and set “open” for other relay interfaces.
- **The Main BUS terminator resistor is set on the air conditioner side. Set SW6 to “open”.**

4-4-4 Setting for Energy monitoring relay interface

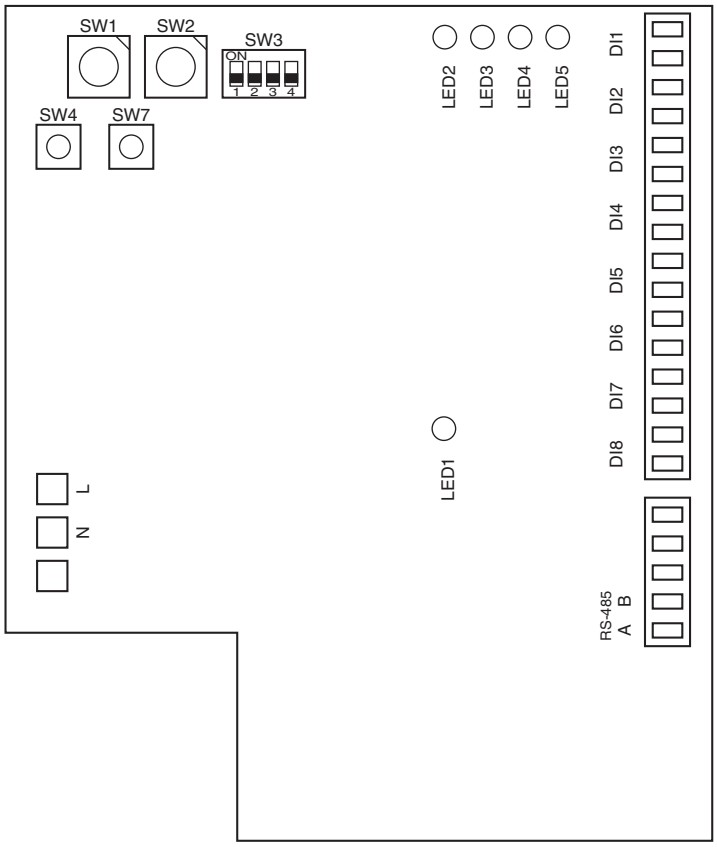

SW1	Address set switch	
	1 - 4	Address
	0,5 - F	Not used
SW2	Operating mode set switch (0 usually)	
SW3	Test switch (all OFF usually)	
SW4	Test switch	
SW7	Reset switch	
LED1	Power indicator	
LED2	RS-485 communication status indicator	
LED3	Not used	
LED4	Test indicator	
LED5	Test indicator	

The following settings are necessary to use Energy Monitoring Relay Interfaces.

- SW1 Address set switch
  When two or more Energy Monitoring Relay Interfaces are used, set a different address for each unit to avoid address duplication.
  Assign addresses in an ascending order. (from 1, 2, 3 . . . n)

⚠ CAUTION

- Set relay interface addresses according to the air conditioner address table.
- When the SW1 setting has been changed, push reset switch SW7. The new address setting is read.
- You can set the Energy Monitoring Relay Interface address independently from the TCS-NET Relay Interface address or the Digital I/O Relay Interface address.

- SW2 Operation mode set switch
- SW3 Test switch
- SW4 Test switch

These switches are not used during normal operation. Set zero (0) or "all OFF".

- SW7 Reset switch
  When performing a address setting with SW1, push this reset switch after the address setting to read the set value.

4-4-5 Setting for Digital I/O relay interface

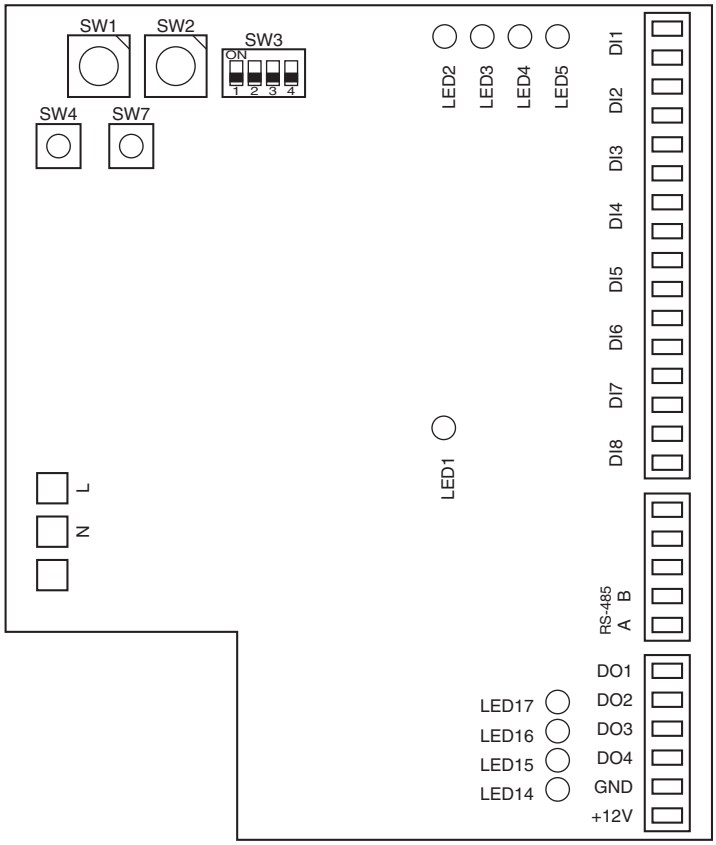

SW1	Address set switch	
	1 - 4	Address
	0,5 - F	Not used
SW2	Operating mode set switch (0 usually)	
SW3	Test switch (all OFF usually)	
SW4	Test switch	
SW7	Reset switch	
LED1	Power indicator	
LED2	RS-485 communication status indicator	
LED3	Not used	
LED4	Test indicator	
LED5	Test indicator	
LED14 - LED17	Digital output indicator	

The following settings are necessary to use Digital I/O Relay Interfaces.

- SW1 Address set switch
  When two or more Digital I/O Relay Interfaces are used, set a different address for each unit to avoid address duplication.
  Assign addresses in ascending order.

⚠ CAUTION

- Set relay interface addresses according to the air conditioner address table.
- When the SW1 setting has been changed, push the reset switch SW7. The new address setting is read.

- SW2 Operation mode set switch
- SW3 Test switch
- SW4 Test switch

These switches are not used during normal operation. Set zero (0) or “all OFF”.

- SW7 Reset switch
  When performing address setting with SW1, push this reset switch after address setting to read the set value.

5

TRIAL OPERATION

5-1 Trial operation
5-2 Air conditioning control system troubleshooting
5-2-1 Faults of air conditioner
5-2-2 Faults of air conditioning control system

5-1 Trial operation

Item	Description	Check point
Preparation	Preparation of necessary documents	● Meeting with the customer on setting information Creation of control wiring system diagram Creation of air conditioner address table Creation of schedule table for each R.C. group/indoor
Entering names	Entry of setting conditions	● Create a setting file including setting data. ● Set the setting data in the Touch Screen Controller by overwriting (copy) the data on its CF (Compact Flash) card.
Checks before trial operation (control wiring)	Checking installation work	● Power supply wiring ● Control wiring ● Grounding of units
	Checking control wiring using the before-trial operation check list. Checking block/tenant/area names Checking schedules	● Check control wiring specifications and wire sizes. ● Check block/tenant/area names using the air conditioner address table. ● Check schedules using the schedule table for each R.C. group/indoor.
Trial operation startup	Power on Initial screen System initialization	● Turn on the Touch Screen Controller with the Intelligent Server and the relay interface turned on. ● The controller software starts automatically, and the total building control screen appears. ● Select “System Initialize” from the option to initialize the system. When “System Initialize” is selected, a message “Will you re-cold start all intelligent server?” appears. Select “Yes”. The setting file is transmitted from the Intelligent Server to the relay interface. The L1 or L2 LED of the Intelligent Server blinks during the startup process. When the startup processing ends successfully, the L1 and L2 LEDs turn off. If the startup processing fails, the L1 LED lights up. Retry “System Initialize” from the Touch Screen Controller in this case. Or select “TPC-CON” on the hidden Windows task bar at the bottom of the LCD screen. You can see a message on the screen during the system reset. The “Access Start” message appears at the end of several message lines. It takes several minutes for system initialization.
Trial operation	Checking communication status (referring to the control wiring system diagram)	● Select air conditioning screen after System Initialize to check communication status and connection of air conditioners. Check that there is no orange frame on the command button of the air conditioner, which indicates a communication error. If an orange frame is present, check power on (or off), control line wiring, and address setting of the air conditioner.
	Checking operation status using the before-trial operation check list.	● Check operation status for each block, tenant, area, and R.C. group/indoor. - ON/OFF - Operation mode - Set temperatures Check all indoor units whether controls can be changed from the Touch Screen Controller and whether the setting changed by the remote controller is reflected on the Touch Screen Controller on both the Touch Screen Controller side and the on-site remote controller side.

• Building name:

	R.C. group/indoor	Display name			Check list											
		Block name	Tenant name	Area name	ON/OFF				Operation mode				Set temperature			
					R.C. group/ indoor	Area	Tenant	Block	R.C. group/ indoor	Area	Tenant	Block	R.C. group/ indoor	Area	Tenant	Block
1																
2																
3																
4																
5																
6																
7																
8																
9																
10																
11																
12																
13																
14																
15																
16																
17																
18																
19																
20																

• A ..... ON
• B .... ON/OFF
• C ..... OFF

• D ..... COOL
• E ... COOL/HEAT
• F ..... HEAT

• Building name:

	R.C. group/indoor	Display name			Check list											
		Block name	Tenant name	Area name	ON/OFF				Operation mode				Set temperature			
					R.C. group/ indoor	Area	Tenant	Block	R.C. group/ indoor	Area	Tenant	Block	R.C. group/ indoor	Area	Tenant	Block
1	PAC-B•1F-1	1F	Tenant A	Shop A	B	B	B	B	E	E	E	E	OK	OK	OK	OK
2	PAC-B•1F-1	1F	Tenant A	Shop A	B	B	B	B	E	E	E	E	OK	OK	OK	OK
3	PAC-B•1F-1	1F	Tenant A	Shop A	B	B	B	B	E	E	E	E	OK	OK	OK	OK
4	PAC-B•1F-1	1F	Tenant A	Shop A	B	B	B	B	E	E	E	E	OK	OK	OK	OK
5	PAC-B•1F-1	1F	Tenant A	Shop A	B	B	B	B	E	E	E	E	OK	OK	OK	OK
6	PAC-B•1F-2	1F	Tenant B	Shop B	B	B	B	B	E	E	E	E	OK	OK	OK	OK
7	PAC-B•1F-3	1F	Tenant B	Shop C	B	B	B	B	E	E	E	E	OK	OK	OK	OK
8	PAC-B•1F-4	1F	Tenant B	Shop D	B	B	B	B	E	E	E	E	OK	OK	OK	OK
9	PAC-B•1F-5	1F	Tenant B	Shop E	B	B	B	B	E	E	E	E	OK	OK	OK	OK
10	PAC-M•1F-1	1F	Tenant C	Shop F	B	B	B	B	E	E	E	E	OK	OK	OK	OK
11	PAC-M•1F-2	1F	Tenant C	Shop F	B	B	B	B	E	E	E	E	OK	OK	OK	OK
12	PAC-M•1F-3	1F	Tenant C	Shop G	B	B	B	B	E	E	E	E	OK	OK	OK	OK
13	PAC-M•1F-4	1F	Tenant C	Shop G	B	B	B	B	E	E	E	E	OK	OK	OK	OK
14	PAC-M•1F-5	1F	Office A	Office	B	B	B	B	E	E	E	E	OK	OK	OK	OK
15	PAC-M•1F-6	1F	Office A	Office	B	B	B	B	E	E	E	E	OK	OK	OK	OK
16	PAC-M•1F-7	1F	Office A	Meeting room	B	B	B	B	E	E	E	E	OK	OK	OK	OK
17	PAC-M•1F-8	1F	Office A	Meeting room	B	B	B	B	E	E	E	E	OK	OK	OK	OK
18	PAC-S•2F-1	2F	Shared space	A	B	B	B	B	E	E	E	E	OK	OK	OK	OK
19	PAC-S•2F-2	2F		B	B	B	B	B	E	E	E	E	OK	OK	OK	OK
20	PAC-S•2F-3	2F	Tenant D	Shop H	B	B	B	B	E	E	E	E	OK	OK	OK	OK

• A ..... ON
• B .... ON/OFF
• C ..... OFF
• D ..... COOL
• E ... COOL/HEAT
• F ..... HEAT

5-2 Air conditioning control system troubleshooting

<Regarding faults that may occur after installation, trial operation, and adjustments of Air conditioning control system and their remedies>

5-2-1 Faults of air conditioner

- The Touch Screen Controller displays an error code and description that are the same as those displayed on the remote controller.
- Check the faulty air conditioner according to the check points of each error code of the air conditioner.

5-2-2. Faults of air conditioning control system

Faults detected by Touch Screen Controller

- Touch Screen Controller displays an error code and description. (Not displayed on the remote controller)
- Take remedial action according to the description and possible causes of each error code in the table below.

Error code	Description	Possible causes	Remedy
S00	Intelligent server communication error.	Intelligent Server is not powered on. Switching HUB is not powered on. Improper connection of network cable. Malfunction of Intelligent Server.	Remove the cause and then power on the Intelligent Server, Switching HUB, and Touch Screen Controller.
S01	Communication error between Indoor and BMS.	Air conditioner is not powered on. Improper TCC-LINK connection. Malfunction of Intelligent Server. Malfunction of Relay Interface.	Remove the cause and then power on the air conditioner, Intelligent Server, and Relay Interface.
S06	BMS-IFWH communication error.	Energy Monitoring Relay Interface is not powered on. Improper RS-485 cable connection. Malfunction of Energy Monitoring Relay Interface. Malfunction of Intelligent Server.	Remove the cause and then power on the Energy Monitoring Relay Interface and Intelligent Server.
S07	BMS-IFDD communication error.	Digital I/O Relay Interface is not powered on. Improper RS-485 cable connection. Malfunction of Digital I/O Relay Interface. Malfunction of Intelligent Server.	Remove the cause and then power on the Digital I/O Relay Interface and Intelligent Server.

Other faults

No.	Description	Possible causes	Remedy
1	Nothing is displayed on the Touch Screen Controller screen.	Touch Screen Controller is not powered on.	Power on the Touch Screen Controller.
		Backlight turns off automatically due to no touch-screen operation for 10 minutes.	Touch the Touch Screen Controller screen.
		Malfunction of Touch Screen Controller.	Power off and on the Touch Screen Controller.
2	Remote controller does not work. (Central control in progress)	Air Conditioning Control System malfunctioned or stopped after local prohibition is set by the system.	Power off and on the air conditioner.
3	Remote controller does not work. (Operation switchover control in progress)	Operation mode range selection is set by the Air Conditioning Control System.	Check the operation mode range selection setting, and correct it if wrong.
4	Scheduled operation of air conditioners is disabled.	Air Conditioning Control System is not working.	Power on the equipment of the system.
		Scheduled operation is not set or non-operation date/special day setting is not updated. (The setting must be updated every year.)	Perform setting for scheduled operation.
5	Air conditioner stops (out of control).	Scheduled operation is not set correctly.	Check the scheduled operation setting, and correct it if wrong.
		Incorrect input of door-lock signal.	Correct the signal connection.
6	Energy monitoring and billing result is incorrect.	Improper connection between power meter and BMS-IFWH3E.	Correct the connection.
		Charging schedule is not set correctly. Non-operation date/special day setting is not updated. (The setting must be updated every year.)	Check the charging schedule setting, and correct it if wrong.

Fault judgment by Intelligent Server

No.	Indication	Possible causes	Remedy
1	An LED other than “RN” LED at the upper left is lighting or flashing after 10 minutes passed from power on of Intelligent Server.	No Relay Interface is powered on.	Check whether every Relay Interface is powered on (shown by LED1 lighting red), and turn on them if powered off.
		Communication with any Relay Interface fails due to improper RS-485 connection or disconnection of connector.	Correct the connection.
		Malfunction of Intelligent Server.	Power off and on the Intelligent Server.

Faults of TCS-Net Relay Interface

No.	Indication	Possible causes	Remedy
1	LED2 (green) does not light. (RS-485 communication error)	Intelligent Server is not powered on.	Power on the Intelligent Server.
		Improper RS-485 connection or disconnection of connector.	Correct the connection.
2	LED3 (orange) does not light.	Improper connection of Main BUS due to disconnection or lack of terminating resistors, etc.	Correct the connection.