Carrier International Sdn. Bhd. Malaysia

INSTALLATION, START-UP AND SERVICE INSTRUCTIONS

CENTRAL STATION AIR HANDLING UNITS 39G

INTRODUCTION
These instructions apply to the Carrier 39G Galaxy Air Handling Unit.

CONTENTS

1.0 Safety Consideration	1
2.0 Pre-Installation	2
3.0 Rigging	2
4.0 Installation	3
5.0 Unit Identification	5
6.0 Section Joining Instruction	6
7.0 Fan Motor & Drives	7
8.0 Installation Of Variable Inlet Vane Actuator	8
9.0 Refrigerant Piping, Direct Expansion Coils	8
10.0 Guide To Starting Up	11
11.0 Guide To Servicing	12

1.0 SAFETY CONSIDERATION

Air handling units are designed to provide safe and reliable service, when operated within design specifications. To avoid injury to personnel and damage to equipment or property when operating this equipment, use good judgement and follow safe practices as out lined below.

⚠ WARNING

a) Check the assembly and component weights to be sure that the rigging equipment can handle them safely.
b) Check for adequate ventilation so that fumes will not migrate through ductwork to occupy space when welding or cutting inside air handling unit.
c) Do not remove access panel or door until fan is completely stopped.
d) Do not work on dampers until their operators are disconnected.
e) Be sure that the fan motors are properly grounded before working on them.
f) Never enter an enclosed fan cabinet or reach into the unit while the fan is running.
g) Disconnect power to the fan motor (Lock open and tag) before working on the fan.
h) Disconnect power to electric heaters (Lock open and tag) before working on or near heaters.
i) Never pressurise equipment in excess of specified test pressure.
j) Protect adjacent flammable material when welding or flame cutting. Use sheet metal or asbestos cloth to contain sparks. Have a fire extinguisher at hand and ready for immediate use.

2.0 PRE-INSTALLATION

2.1 Check items received against packing list. Notify Carrier of any discrepancies.

2.2 Examine for damage incurred during shipment. File claim with transit company if any damage is found.

2.3 Refer to rigging details as shown in (Fig.1) to transfer unit from truck to storage site.

2.4 If unit is to be stored for more than 2 weeks prior to installation, please exercise the following precautions :-

a) Choose a dry storage site that is reasonably level and sturdy to prevent undue stress and damage to the unit structure or components. Do not store on vibrating surface - damage to stationary bearing can occur.

b) Remove all fasteners and other small parts - tag and store these items in a safe place until needed.

c) Unit are shipped from the factory wrapped in protective plastic sheet. The plastic sheets may be damaged during transit or after inspection. Cover entire unit with tarpaulin or plastic coverall. Extend cover under unit if stored on ground. Secure cover with adequate tie downs.

d) When unit is stored over an extended period we recommend a monthly procedure as follows -: Remove the tarpaulin from the unit, enter fan through access door or fan section inlet, remove the belt ties (if any) and rotate fan and motor (if any) slowly by hand. This helps to re-distribute bearing grease and to prevent bearing corrosion.

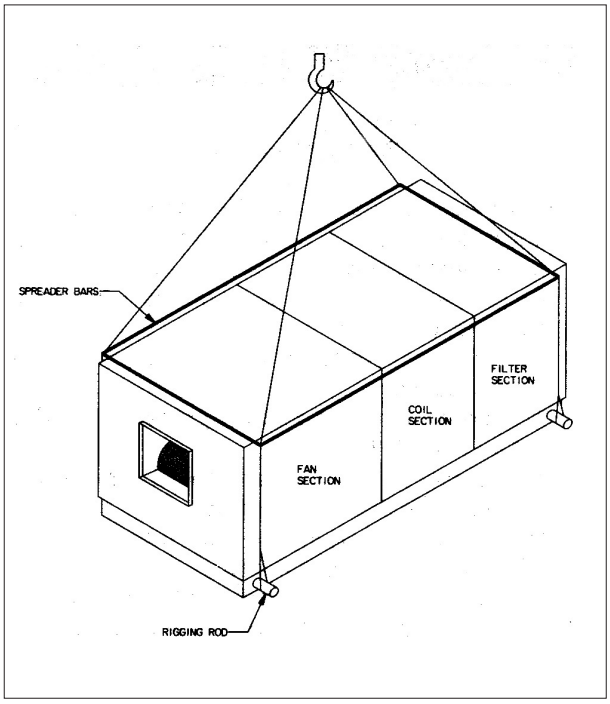

Fig. 1 Rigging Of Units

3.0 RIGGING

3.1 All 39G units are equipped with rigging hole. As such, the units can be rigged by means of the rigging rod.

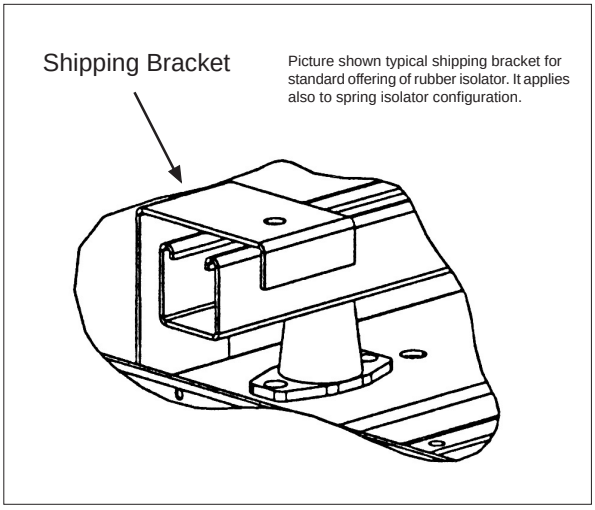

Fig. 2 Shipping Bracket

⚠ CAUTION

If a fork lift truck is used, lift only from the heavy end.

3.2 Units are shipped fully assembled or in sections, depending on size and application. The 39G Galaxy central station air handling unit are built up in "Modules" (Refer to Fig. 3). Any unit which is 22M (module) or longer in length will be shipped in shorter sections.

3.3 Do not remove skids or protective covering until unit or section is ready for final replacement.

IMPORTANT:

a) Do not lift unit by coil connections or headers.

b) Do not remove protective caps from coil piping connections until ready to connect piping.

c) Do not remove protective cover on grease from fan shaft until ready to install sheave.

d) When fan and motor drives are supplied from the factory, the pulleys are installed but the belts are supplied loose to avoid shipping damage. These belts should be tag and stored at a safe place until needed. This will help to minimise theft at job site.

e) Do not remove the shipping bracket (Refer to Fig. 2) that are supplied to prevent the fan housing and motor base from moving during transit. These shipping bracket should only be removed after the air handling unit is positioned and just immediately after the fan motor and drive is installed.

f) Do not remove the shipping wood block, unless the fan motor and drive is going to operate.

DIMENSION OF FUNCTIONS (MODULES)

LENGTH OF SECTIONS IN MILLIMETRES	
NO. OF MODULES	**25MM CASING**
1M	100
2M	200
3M	300
4M	400
5M	500
6M	600
7M	700
8M	800
9M	900
10M	1000

Fig. 3 Dimension Of Functions

Note:-

Add 110mm for overall casing dimension which includes the aluminium frames.

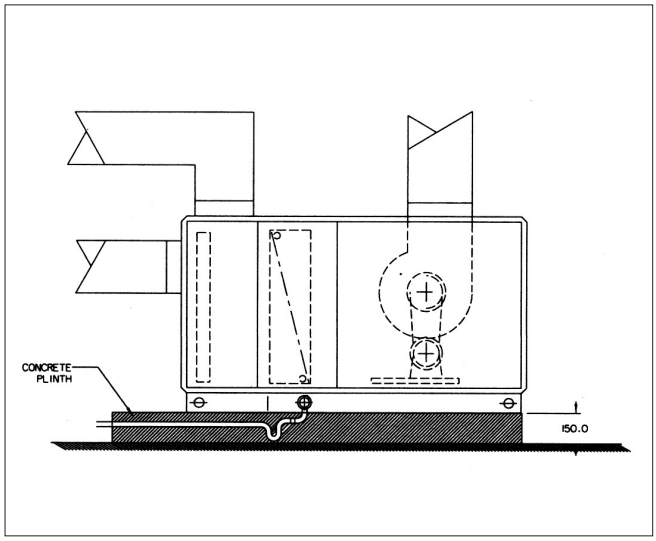

Fig. 4 Installation At Ground Level

4.0 **INSTALLATION**

4.1 Ground/Floor Mounted Units.

a) When installing the air handling unit on the ground/ floor, a raised concrete plinth is recommended (Refer to Fig. 4 & 5).

b) Provide adequate clearance for unit service access (fan shaft and coil removal, filter removal, motor access, etc) (Refer Fig. 7).

c) An adequate trap must be provided to the condensate drain line to prevent excessive built up of condensate in the drain pan.

4.2 Condensate Drain -

Install a trapped condensate drain line at unit drain connection. Use 40mm (nominal) (43mm OD) standard pipe. See (Fig. 6), for proper trap design for a draw-through unit.

Determine design negative static pressure. This pressure is not the same as fan total pressure, which includes pressure losses downstream as well as upstream from the indoor air fan. Always assume the worst conditions such as having return air filters clogged with dirt.

Referring to (Fig. 6), Differential 'A' must be equal to or larger than negative static pressure at design operating seal. (Differential 'B'). This differential must be equal to or larger than one-half the maximum negative static pressure. When the fan starts. Differential 'C' is equal to the maximum negative static pressure.

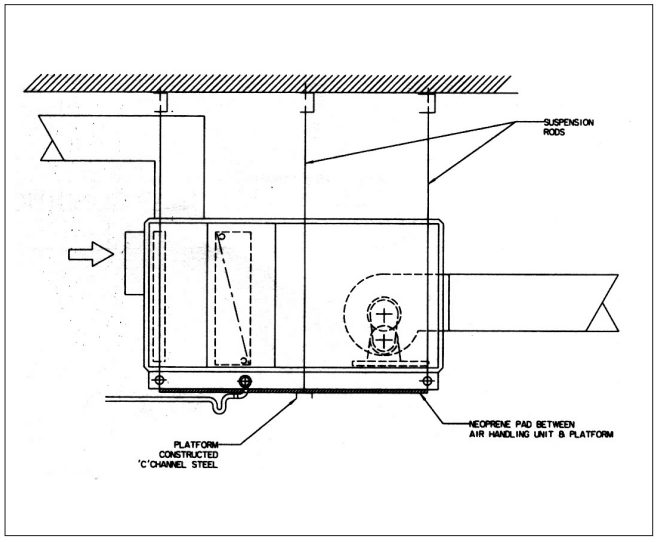

Fig. 5 Suspended Installation

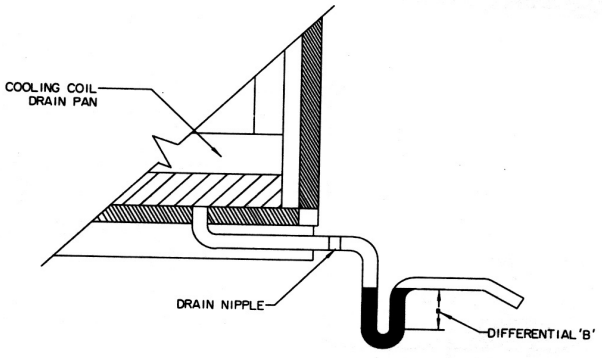

FAN OFF

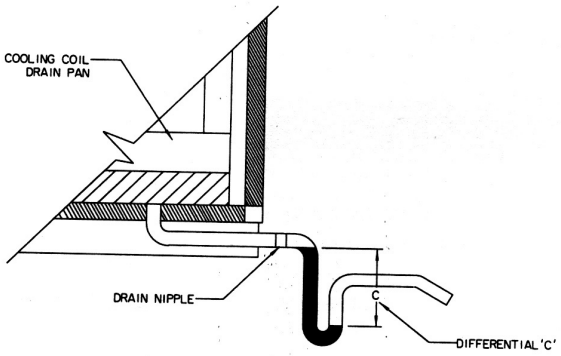

TRAP CONDITION WHEN FAN STARTS

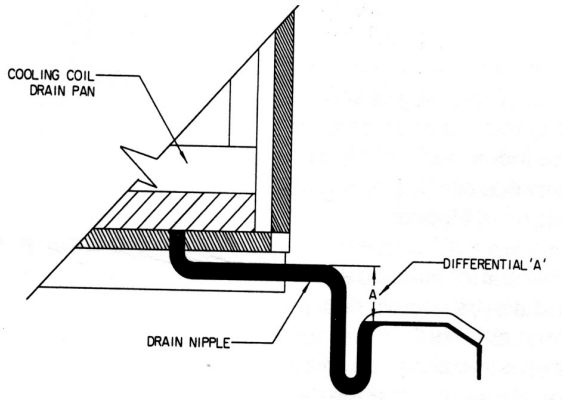

FAN RUNNING AND CONDENSATE DRAINING

Fig. 6

4.3 Typical Assemblies, Dimensions And Service Areas

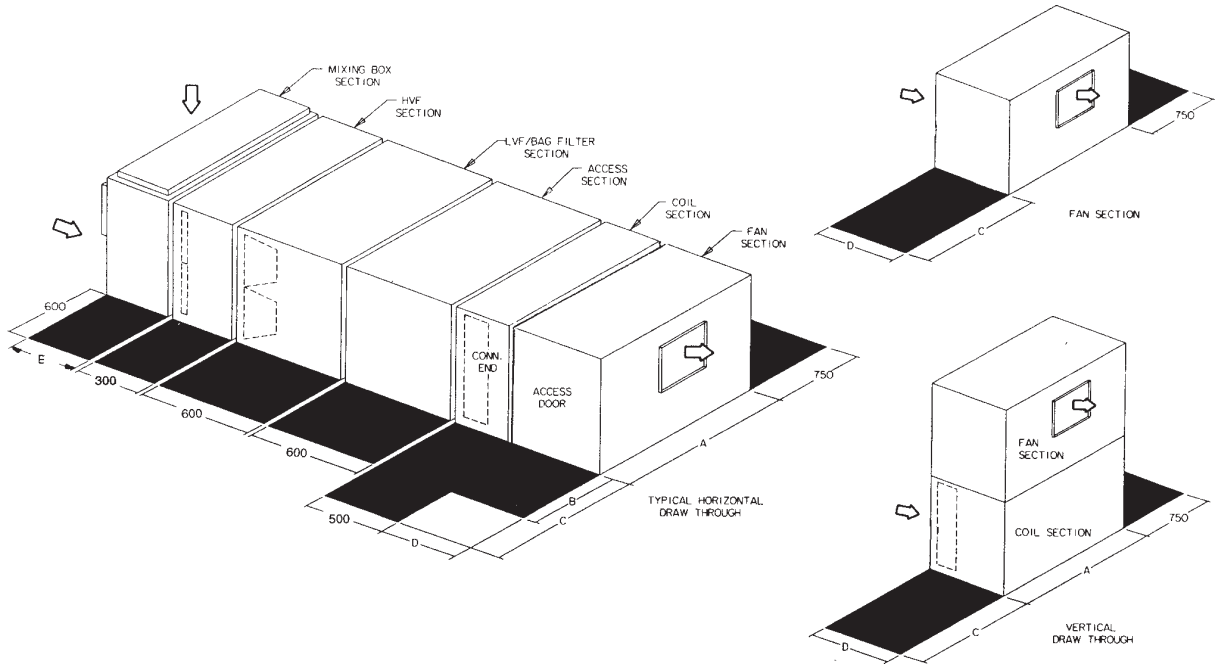

⇨ Air Flow Direction

Unit Size	A	B	C	D	E
39G0508A	800	1000	1100	500	600
39G0508B	800	1000	1100	500	600
39G0511	1100	1000	1400	500	600
39G0612	1200	1000	1500	600	600
39G0713	1300	1000	1600	700	600
39G0813	1300	1000	1600	800	600
39G0914	1400	1000	1700	900	600
39G0916	1600	1000	1700	900	600
39G1018	1800	1000	1900	1000	600
39G1118	1800	1000	2100	1000	600
39G1319	1900	1000	2100	1100	600

Unit Size	A	B	C	D	E
39G1422	2200	1500	2200	1300	900
39G1522	2200	1500	2400	1500	900
39G1722	2200	1500	2400	1500	900
39G1724	2400	1500	2400	1500	900
39G1725	2500	1500	2800	1600	900
39G1926	2600	1500	2800	1600	1300
39G2127	2700	2000	2900	1800	1300
39G2230	3000	2000	3100	2000	1300
39G2234	3400	2000	3600	2000	1300
39G2434	3400	2000	3600	2000	1300
39G2636	3600	2000	3800	2000	1300

Note:
(1) For dimension A & D and other numerical value, add the frame thickness respectively
~ 110mm for 25mm casing
~ 160mm for 50mm casing
(2) Dimension C is where the access door and coil connection end applied accordingly

Fig. 7 Typical Assemblies Dimension And Service Area

4.4 The 39G Air Handling Units are as standard fitted with factory installed spring or rubber type anti-vibrations mounts. Externally mounted anti-vibration mounts in addition to the factory installed anti-vibration are not recommended.

4.5 When the 39G Air Handling Units are required to be suspended a platform is required. The platform must be constructed such that it is strong enough to support the whole air handling unit under operating condition. In doubt, please consult your nearest Carrier representatives.

5.0 **UNIT IDENTIFICATION**

Each air handling unit will have the identification sticker on the outer skin of the door to the fan section.

If shipping tags or labels should become lost or unreadable at job site, the following procedure can help the installer to identify the components and assembly sequences.

* Refer to your nearest Carrier representatives for the nomenclature.

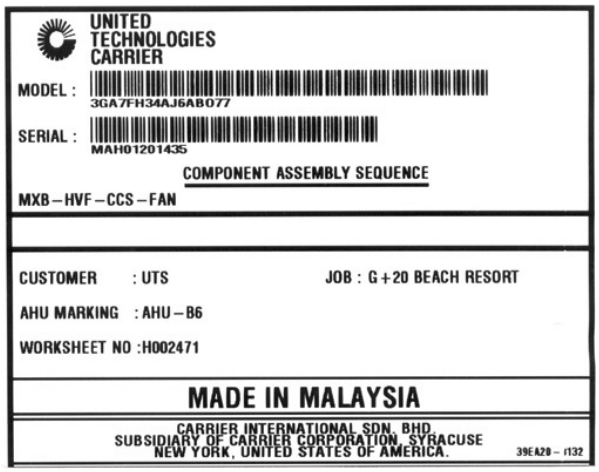

Fig. 8 Identification Sticker

6.0 SECTION JOINING INSTRUCTION

6.1 25mm & 50mm

The installation procedure for joining bracket (Pre drilled holes) are as follows:

a. Identify the correct sections which need to be joined together.
b. Make sure all proper action are taken to level the two separate sections.
c. Affix the gasket (that is supplied with the unit) along the edges of the aluminium frame that is required to be joined together. (refer figure 1)
d. Locate the pre-drilled holes along the horizontal and vertical frame.(refer figure 1)
e. To install the correct quantity of joining bracket, refer to SECTION JOINING INSTRUCTION sticker. Start by placing the joining bracket between the frame and insert the bolt, nut and washer set.(refer figure 2)
f. Tighten the bolt and nut until it compress the gasket and make sure there is no leakage. The purpose of gasket is to prevent any air leakage.

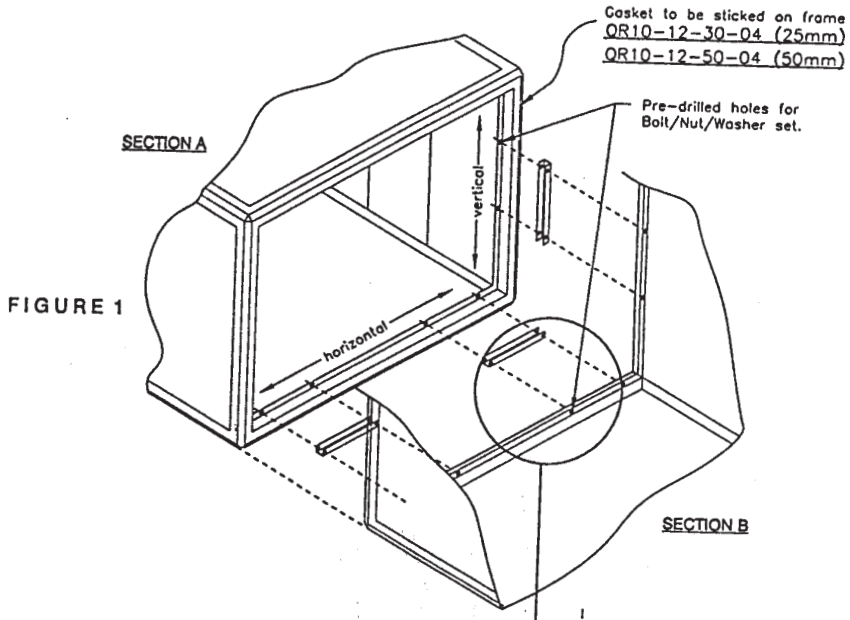

FIGURE 1

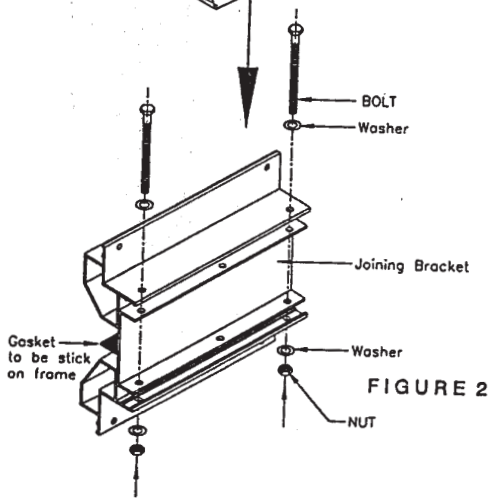

FIGURE 2

IMPORTANT use the hole for bolt proportionately

AHU Size	Internal Joining Bracket Qty For Two Section		
	Vertical	Horizontal	Total
0508A	1	2	6
0508B	1	2	6
0511	1	2	6
0612	1	3	8
0713	1	3	8
0813	2	3	10
0914	2	3	10
0916	2	3	10
1018	2	3	10
1118	2	3	10
1319	3	3	12
1422	3	4	14
1522	3	4	14
1722	3	4	14
1724	3	4	14
1725	3	4	14
1926	3	4	14
2127	4	4	16
2230	4	5	18
2234	4	5	18
2434	4	5	18
2636	4	5	18

This Unit Size is _____

PART NO: 39GH512-050

ITEM	25mm	Qty	50mm	Qty
BOLT STUD	AH07AB181	1	39FJ560-322	1
WASHER	AU02AB202	2	AU02AB261	2
NUT	AT39AB171	1	AT39AB261	4
BRACKET	39GH539-013	1	39GH539-013A	1

Note: For 39G 50mm, Use 2 Nuts with Stud to Attach Joining Bracket with Aluminium Frame.

Fig. 9.1 Joining Bracket

7.0 FAN MOTOR & DRIVES

The 39G unit will be supplied with or without the fan motor and drive from the factory. In either case, a motor base will be supplied installed on the fan and motor base channel.

7.1 Factory Installed Fan Motor & Drive
All motors and pulleys are mounted with only a "rough" alignment. All drives belts are loosely installed to the sheaves and a warning tag is attached to the belt with a nylon/wire tie. The installer is responsible for final alignment as described in the procedure.

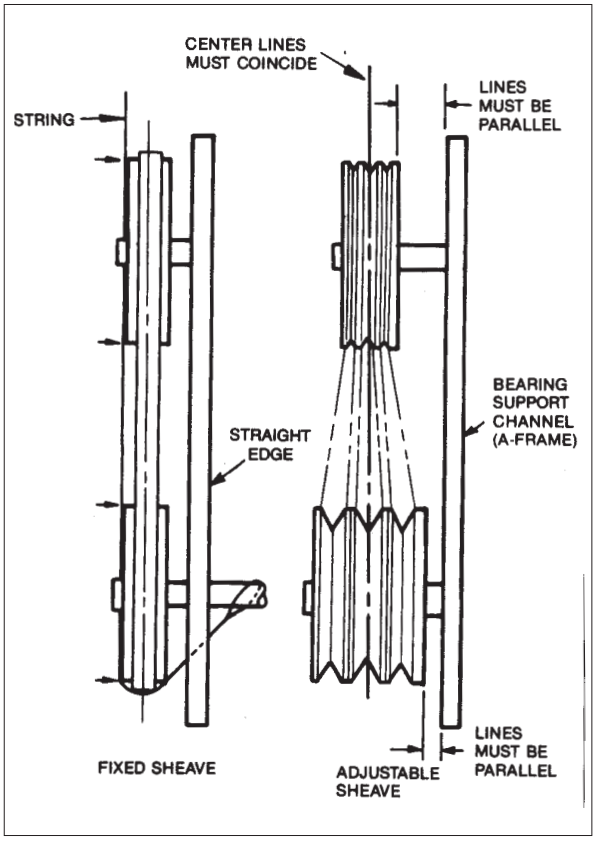

Fig. 10 Sheave Alignment

7.2 Field Supplied Fan Motor & Drive
Ensure that the motor is of the correct HP/kW frame size & electrical characteristics.

7.3 Installation of Pulleys
Install the pulley on the fan shaft and motor shaft for minimum overhang. Exercise care when mounting the pulley to the fan shaft. Excessive force may result in bearing damage. Remove rust preventing coating or grease from the shaft. Make sure that the shaft is clean and free of burrs. Lubricate the bore of the pulley before installing. Ensure that the fan and motor shafts are parallel and level. Use straight edge or a piece of string to check the alignment of fixed pitch pulleys. If the pulleys are properly lined up, the string will touch them at the point indicated by the arrows (Refer Fig 10). For variable pitch pulleys, use a block of wood or other material to compensate for the difference in pulley width. To check the alignment of these pulleys, make sure that the centre lines of both pulleys are in line and parallel to the ("H" frame) bearing support channel. The variable pitch pulley is normally installed on the motor shaft.

7.4 Proper Belt Tension
(i) Correct tension of a V-Belt drive is carried out as follows:
(a) Fix the belts into the grooves and increase the centre distance until the belts are snug. **Note : Never lever belts over sheaves.**
(b) Operate the drive for a few minutes and observe the "bow" in the slack side. Tighten until only a slight "bow" appeares in the slack side of the belts while they are in operation under load.
(c) During normal operation a V-Belt will seat itself in sheaves grooves and will require periodical check to maintain tension. The seating occurs more rapidly during the **first 24 hours** of operation, and it is very important to check drive tension carefully during this period and to retension as required.

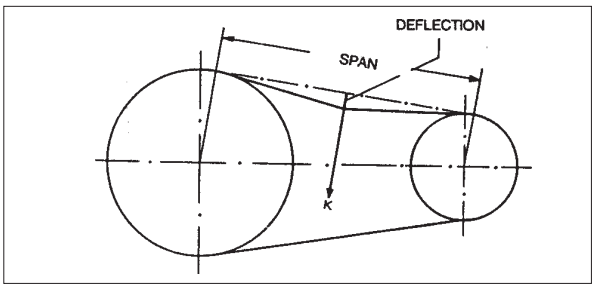

(ii) For drives where tension may be critical factor, the following procedure is recommended:
(a) Using the diagram shown below, measure the span length of the drive.
(b) At the centre of the span, apply a force K (perpendicular to the span) large enough to deflect the belt 15mm per 1 meter of span.
(c) The deflection force for any V-belt should be within the minimum and maximum force shown in the table. When the tension drops to the minimum value, readjust to the maximum value.

Deflection Force K (Newton)

Deflection force (Newton)								
Gross section dia.	SPZ		SPA		SPB		SPC	
of smaller sheave	min.	max.	min.	max.	min.	max.	min.	max.
63-80	12	19	-	-	-	-	-	-
90-122	16	24	19	29	-	-	-	-
125-160	19	28	26	40	33	50	-	-
180-224	19	29	30	46	43	64	58	87
250-355	-	-	32	48	51	77	79	119
400-630	-	-	-	-	55	82	103	154

8.0 INSTALLATION OF VARIABLE INLET VANE ACTUATOR (OPTIONAL)

8.1 Backward Curved Fans – Inlet vane linkage is factory installed on both inlets of fan. Install actuator and checked linkage operation as follows:-

(a) Position Actuator – Locate inlet guide vane actuator inside fan section. Actuator is to be mounted to any suitable structural member (such as bearing support). Actual location will vary with unit size and fan discharge arrangement.

(b) Check Linkage - Align actuator and lever arm, before connecting actuator to linkage for freedom of movement from fully closed to fully open position. Then connect actuator and recheck linkage for proper operation. Linkage adjustment must allow maximum travel actuator.

⚠ CAUTION

Improper adjustment of linkage for actuator travel may cause linkage to slip.

Fan Type Backward curved	Max Torque Force (Nm)
BCG 400	8.3
BCG 450	12.3
BCG 500	18.6
BCG 560	19.6
BCG 630	27.5
BCG 710	39.2
BCG 800	63.8
BCG 900	78.5
BCG 1000	98.1

Fig. 11 Inlet Vane Operator Data

⚠ CAUTION

Do not force vanes past full open or closed position.

9.0 REFRIGERANT PIPING, DIRECT EXPANSION COILS

Direct expansion coils are split into 2, 4 or 8 splits depending upon the unit size and coil circuiting. Each split requires its own distributor nozzle, expansion valve and suction piping. Suction connections are on the entering side connections for each coil split are on the air leaving side in the same order from to bottom. Refer to example on (Fig. 12).

⚠ CAUTION

Direct expansion coils are shipped pressurized with dry air. Release pressure from each coil split through valves in protective caps before removing caps. Do not leave piping open to the atmosphere unnecessarily. Water and water vapor are detrimental to the refrigerant system. Until the piping is complete, recap the system and charge with nitrogen at the end of each work-day. Clean all piping connections before soldering joints. The lower split of face split coils should be first on, last off. Row split coils utilize special intertwined circuits: either splits of these row split coils can be first on, last off.

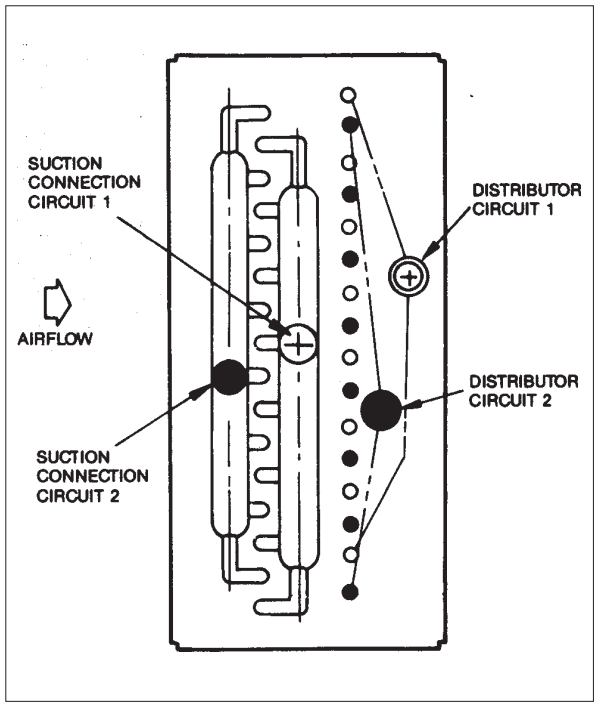

Fig. 12 Example Of Direct-Expansion Coil Distributor And Suction Connections

9.1 Suction Piping

Connect suction piping as shown in (Fig.13) for face split coil or (Fig 14) for row split coil. Suction line from coil connection to end of the 15-diameter-long riser should be same tube size as coil connection to ensure proper refrigerant velocity. Refer to Carrier System Design Manual, Part 3, and size remaining suction line header pressure drop equivalent to approximately 2.5^{0}F. Refer to Fig 16 for piping risers to the compressor.

To minimize the possibility of flooded starts and compressor damage during prolonged shutdown, install an accumulator in the suction line or a solenoid in the liquid line of last-on, first-off split in row applications.

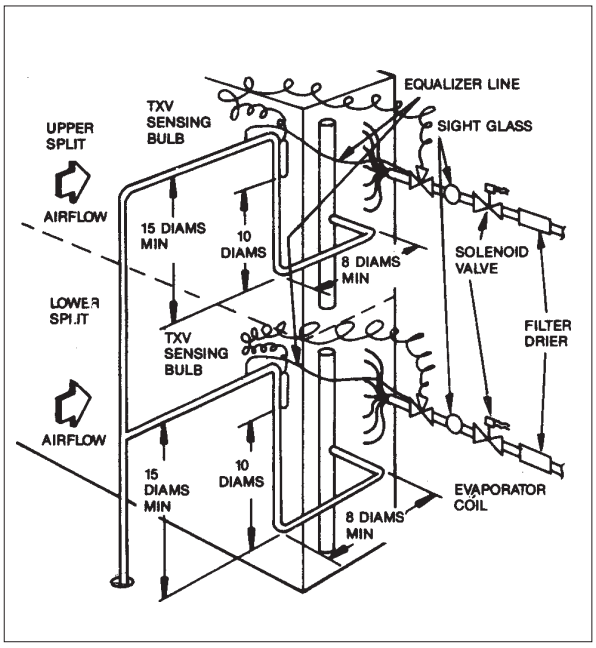

Fig. 13 Face Split Coil Suction Line Piping

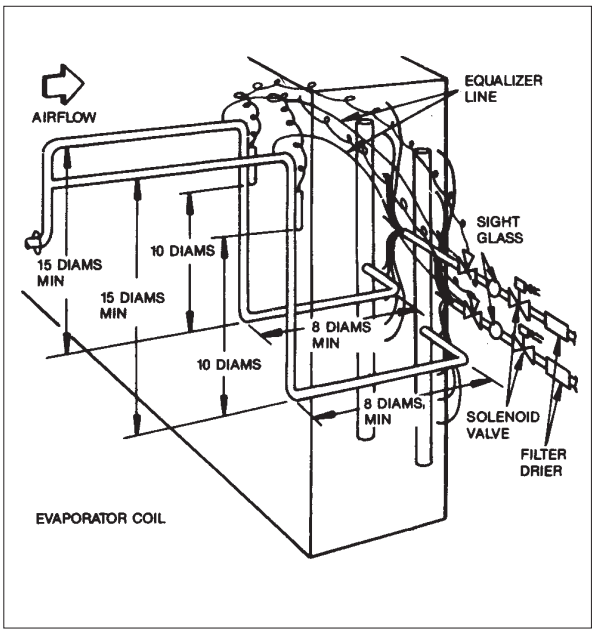

Fig. 14 Row Split Coil Suction Line Piping

9.2 Expansion Valve Piping

Distributor nozzles and thermostatic expansion valves are factory or field supplied.

Note:-

Factory supplied distributor nozzle sizes are marked on coil cover label. Be sure that correct nozzle is installed in each distributor before installing expansion valve.

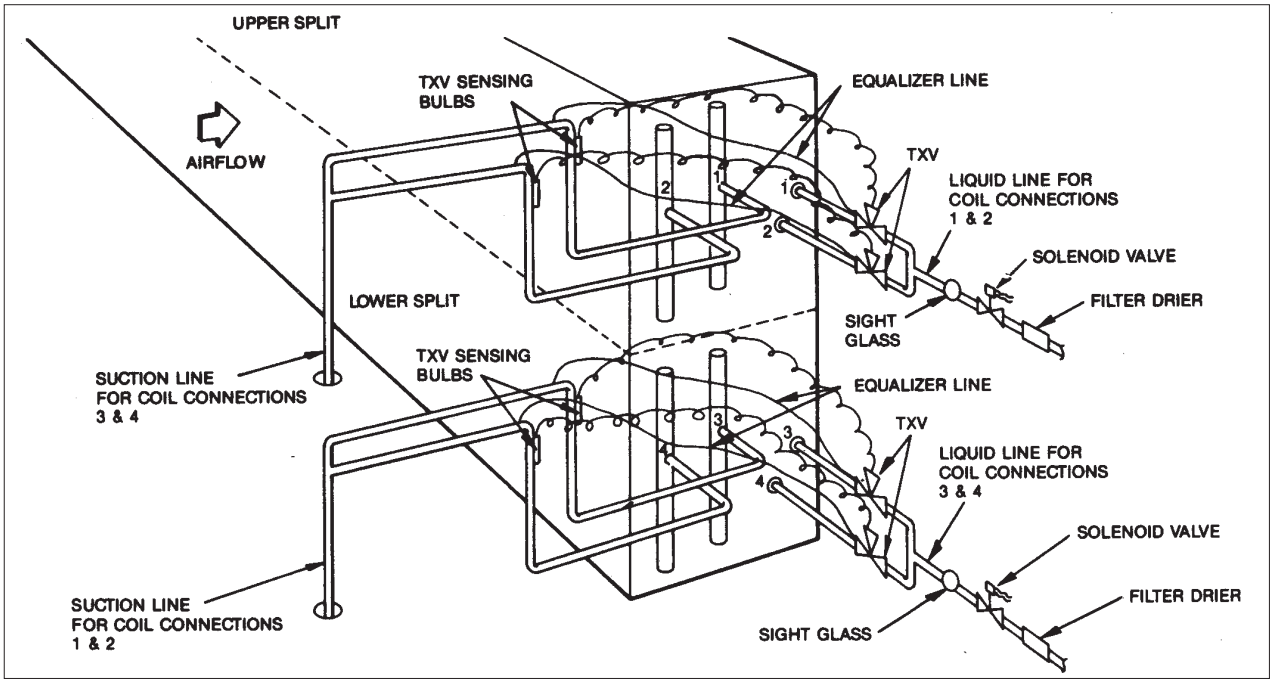

Fig. 15 Double-Circuited Face Split Coil Manifolding (Typical)

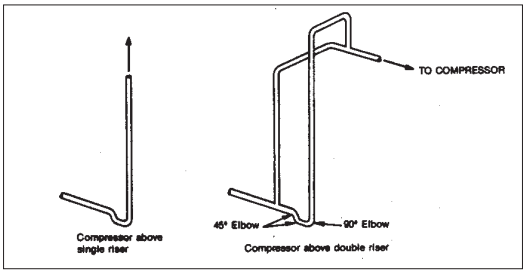

Fig. 16 Suction Line Riser Piping

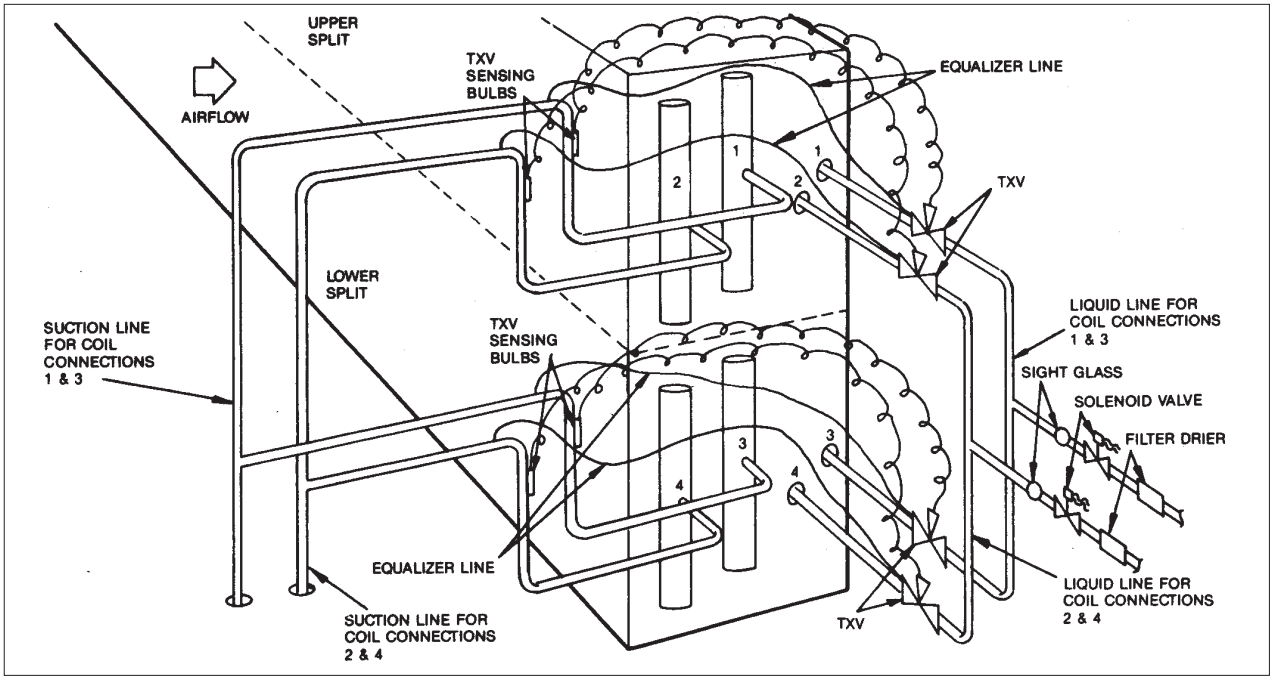

Fig. 17 Double-Circuited Row Split Coil Manifolding (Typical)

10.0 GUIDE TO STARTING UP

10.1 Ensure that all construction debris are removed from the interior of the unit.

10.2 Install filter media in all filter section. When roll filter are used , ensure that the filter media is correctly installed and that the roll filter mechanism is functioning property.

10.3 Check that the fan, motor bearing and linkages are adequately lubricated.

a) Bearings are normally shipped full of grease for corrosion protection and may run warm temporarily on start up until excess grease has been discharged.

10.4 Hand operate all linkages, such as variable inlet guide vanes and dampers to check for freedom of movement.

10.5 Check tightness of bearing set screws or locking collars.

10.6 Check tightness of set screws on blower wheel hub and pulley.

10.7 Double check the alignment and tension of the V-belts.

10.8 ***VERY IMPORTANT***

Before energising any power to the unit, double check that all restraints that might have been used during shipping are removed from the fan shaft. The fan shaft and motor shaft must both be free-wheeling before the power is turned on. Remove all holding down bracket used to prevent the fan and motor base moving during transit.

10.9 Check the fan speed with a strobe type tachometer, or use an approximation technique with the following formula. Obtain the motor RPM from the fan motor plate. Measure the fan and motor pulley outer diameter (OD).

$$\text{Fan RPM} = \text{Motor RPM} \times \frac{\text{Motor Pulley OD}}{\text{Fan Pulley OD}}$$

eg. Nameplate Motor RPM = 1500

Motor Pulley OD = 200mm
Fan Pulley OD = 300mm

$$\text{Fan RPM} = 1500 \times \frac{200}{300} = 1000$$

Check that this fan RPM measured or calculated is approximately equal to the speed shown on the sticker. If the fan RPM measured or calculated, exceeds the value shown on the sticker by much, re-balancing of the fan in the field may be required. In doubt, please refer to your nearest Carrier representatives.

10.10 Check the direction of rotation arrow label on the drive side of the fan housing indicates the correct direction of rotation. (Refer Fig 18)

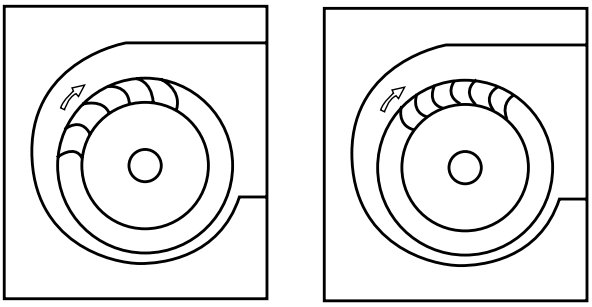

Backward Curved **Forward Curved**

Fig. 18

10.11 Check the vibration level. If excessive vibration occurs, check the following :-

a) Variable pitch pulleys.
Normally variable pitch pulley specified to make the job of air balancing easier. Once the air balance of the system has been accomplished, replace the variable pitch pulley with the correct fixed pitch pulley for continuous application.
b) Drive misalignment.
c) Mismatched, worn or loose V-belts.
d) Blower wheel or pulley loose on the shaft.
e) Loose bearings.
f) Loose mountings.
g) Motor out of balance.
h) Pulleys (eccentric) or out of balance.
i) Vibration isolation improperly adjusted.
j) Out of balance or corroded blower wheel (re-balance or replace as necessary).
k) Accumulation of material on blower material (remove as necessary).
l) Shipping brackets preventing the fan housing from moving during shipment. These must be removed prior to start-up.

10.12 Chilled Water and Hot Water Coil.

To vent the coils, proceed as follows :-

a) Close all coil water supply and return main valves.
b) Open all vents but no more than 2 full turns.
c) If vent is clogged up with dirt it may be necessary to remove needle valves from vents and clean as necessary.
d) Open coil water supply and return valves. Fill coil with water until all air is expelled. This occurs when the hissing sound from the vent stops and only water is oozing out from the vent.
e) Close vent needle valves.

⚠ CAUTION

The venting procedure for hot water coil must be done when the water is not heated up.

10.13 Direct Expansion Coil

Charge refrigerant in accordance with the recommendation as shown in the Installation Operating and Maintenance instructions for the condensing unit.

11.0 GUIDE TO SERVICING

11.1 Review the safety considerations at the beginning of these instructions. Good safety habits are important tools when performing servicing procedures.

11.2 Use a strobe type tachometer or calculate as per item 10.9.

11.3 To replace the fan motor, proceed as follows :-

a) Shut off the power of the motor.
b) Disconnect the tag power wires at motor terminals.
c) Loosen motor brace-to-mounting rails attaching bolts. Loosen belt tensioning bolts to adjust the motor position so V-Belts can be removed without stretching over grooves.
d) Mark belts as to position. Remove and set aside belts, tag as necessary.
e) Remove motor to motor bracket hold down bolts.
f) Remove motor pulley and set aside.
g) Remove the motor.
h) Install the new motor. Re-assemble by reversing steps a to f. Be sure to re-install multiple belts in their original position. Use a new set if required. Do not stretch belts over the pulleys. Align belts as per item 7.3.
i) Re-connect motor leads and restore power. Check fan proper rotation as described in item 10.10 Start-Up procedure.

11.4 To clean the coil, spray mild detergent solution on the coils with garden type sprayer. Rinse with fresh water. Check to ensure that the condensate line is not clogged up.

11.5 Winter shutdown for chilled water coil, proceed as follows :-

1) Anti freeze methods of coil protection.
a) Close coil water supply and return valves.
b) Drain coil as follows :

Method 1

"Break" flange of coupling at each header location, separate flange or coupling connection to facilitate coil drawing.

Method 2

It is recommended that the auxillary drain be added to coil piping if yearly "Winterizing" of coils is anticipated. This auxillary piping should be located at the highest and lowest point on the respective header connection for each coil. Hence, to drain the coil, open both valves to the auxillary drain piping.

c) After coil is drained, Method 1, connect line with a service valve and union from upper nozzle to an anti freeze reservoir. Connect a self priming reversible pump between the low header connection and the reservoir. Method 2, make connection to auxillary drain valves.
d) Fill reservoir with any inhibited anti-freeze acceptable to local authority codes.
e) Open service valve and circulate solution for 15 minutes, then check its strength.
f) If solution is too weak, add more anti-freeze until desired strength is reached, then circulate solution through coil for 15 minutes or until concentration is satisfactory.
g) Remove upper line from reservoir to reversible pump. Drain coil to reservoir and close service valve.
h) Break union and remove reservoir and it lines.
i) Leave coil flanges or coupling open and auxillary drain valves open until spring.

11.6 Coil Removal

a) (Refer to Fig. 6 and 7) for service clearance area.
b) For chilled water coil, shut off the valves.
c) Disconnect the chilled water and condensate piping.
d) Remove coil section panel (all screws are located on the inside of the unit).
e) On header end, remove screws holding the block off and the coil casing.
f) Slide coil and baffles out of unit.
g) Lift coil using hooks at the coil casing. Do not lift by header or center of coil.
h) Reinsert coil by reversing order of procedures listed.
i) Apply sealant as necessary to edges to ensure air tightness.

11.7 Fan Shaft and Bearing

a) Disconnect power supply to fan motor.
b) Use wooden blocks to prevent the fan and motor assembly from free floating over the anti-vibration mounts.
c) Loosen motor frame adjustment to release belt tension. Remove belts.
Caution: Do not stretch belts over the pulley. Damage to belt can result.
d) Loosen bolts on bushing of pulley and remove bushing, then the pulley.
e) Loosen bearing set screw and locking collar. Drive eccentric type collar in direction opposite to shaft rotation.
f) Remove bearing while observing the following precaution. (Refer 11.8).

11.8 Blower Wheel Replacements

a) There are two type of DIDW centrifugal fans used with the 39G unit.
i) Backward Curved.
ii) Forward Curved.

b) All blower wheel and fan shaft are designed to be removed through fan housing inlet. Generally, there should be no need to disconnect the flexible connection and duct work.

⚠ CAUTION

1) Block fan wheel when removing the shaft to prevent damage to the inlet cones.
2) Use wooden blocks to prevent the fan and motor assembly from free floating over the anti-vibration mounts.
3) There may be instances where the location of the access door is not directly in line with the centre of the shaft. Here, it is necessary to remove the intermediate post, adjacent panel and door assembly. Apply sealant as necessary when these items are re-installed.
4) Exercise procedure to remove fan shaft and bearing as outlined earlier.
5) Remove bolts and nuts holding frame to the fan housing. Only the frame on the side where the blower wheel is to be removed out is required to be dismantled.
6) Removed bolts holding frame inlet cone or inlet guide vane assembly and remove accordingly.
7) Remove fan wheel and shaft as assembly.

11.9 Lubrication

Fan bearings are not permanently lubricated. Advisable to top-up grease every 3 months.

11.10 Filters

The 39G unit can be supplied with or without filters from the factory. There are 3 types of standard filters available.

a) High velocity panel filters (Side withdrawal type).
b) Low velocity panel filters (Side withdrawal type).
c) Bag filters (Side withdrawal type).
d) HEPA filter EU13 particle board frame.

Notes:-

The high velocity filter frame are design to accept filter media cells with aluminium or steel frame.
* HVF & LVF Media-these filters shall be of the washable /disposable 48mm deep plated panel type, gravimetric efficiency 85% to 93% to ASHRAE 52-76.

BF Media-these bag filters shall be of the disposable dry media type, deep bed, fixed panel type, 600mm, average gravimetric efficiency 85% to ASHRAE 52-76.
For other types of filters, please contact your nearest Carrier representatives.

APPENDIX 1 : ASSEMBLY FAN AND MOTOR BASE (PHASE 1)

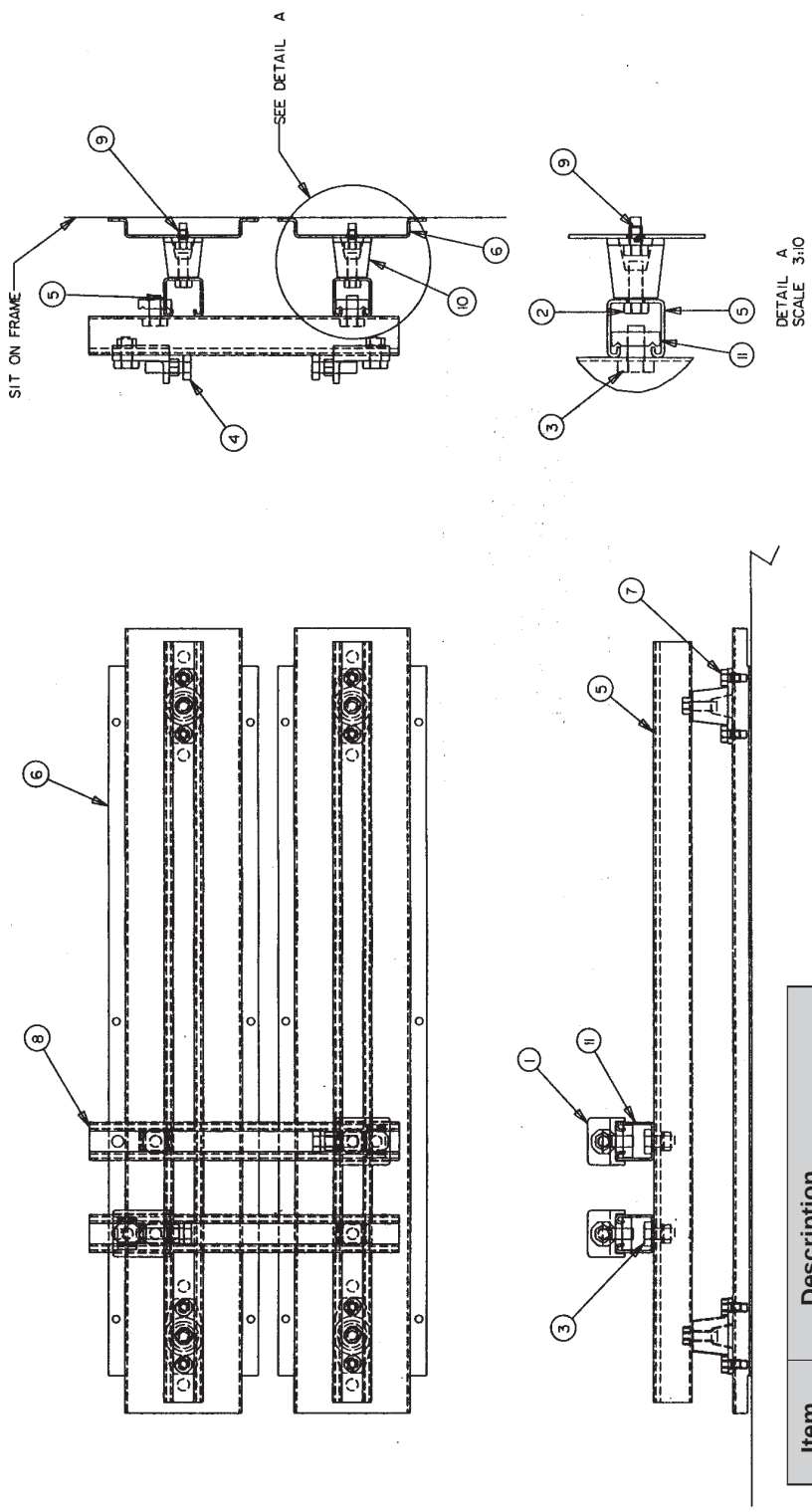

Item	Description
1	Belt Tensioner
2	Bolt, HEX HD M10-30L(S)
3	Bolt, HEX HD M12-30L
4	Bolt, HEX HD M12-40L
5	Fan, Channel
6	Hat, Channel
7	HEX, Bolt M8-25L
8	Motor, Channel
9	Nutsert 8MM, Large Flange
10	Rubber, Isolator
11	Unistrut Nut M12

Notes:-

1. Spring isolator can be offered
2. The design will be changes when Fan size is FCG / BCG 500 and above.

APPENDIX 2 : ASSEMBLY FAN AND MOTOR BASE (PHASE 2)

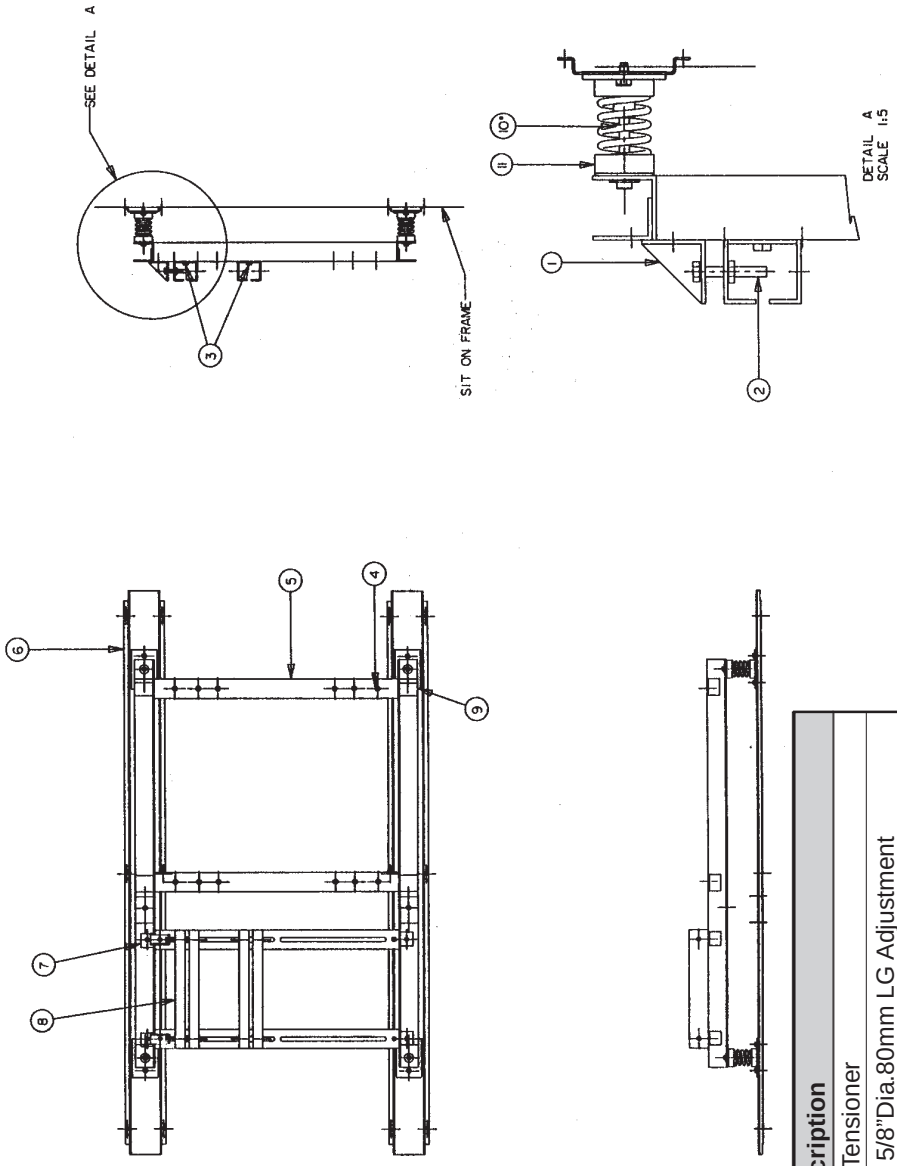

Item	Description
1	Belt Tensioner
2	Bolt, 5/8”Dia.80mm LG Adjustment
3	Bolt, 5/8”Dia.40mm LG
4	Bolt, 5/8”Dia.40mm LG C/W Tapered Washer
5	Fan, Base ‘L’ angle 3” x 3” x 5mm THK
6	Hat, Channel
7	Adjustment bracket
8	Motor, Base ‘L’ angle 3” x 3” x 5mm THK
9	Angle support
10	Spring, Isolator
11	Assy, Cap isolator

Notes:-

1. The “REF” dimension to be changed according to the Fan & Motor size.
2. Spring isolator size and quantity depend on Fan & motor size.

FILTER TYPE, DIMENSION AND QUANTITY FOR EACH AHU SIZE.

PART NAME	PART NO.	MODEL																					
		0508A	0508B	0511	0612	0713	0813	0914	0916	1018	1118	1319	1422	1522	1722	1724	1725	1926	2127	2230	2234	2434	2636
a) HEPA Filter EU13 Particle Board Frame (Media Thickness 292mm)																							
(H305 x W305)mm	39GA509-320	-	-	1	-	-	-	-	-	-	-	-	-	-	-	-	-	-	-	-	-	-	-
(H305 x W610)mm	39GA509-321	1	1	1	-	-	-	-	-	2	2	-	-	-	3	-	-	-	-	-	-	5	-
(H508 x W508)mm	39GA509-322	-	-	-	2	2	2	-	-	-	-	6	-	-	-	12	12	12	-	20	24	-	-
(H610 x W610)mm	39GA509-323	-	-	-	-	-	-	2	2	2	2	-	6	6	6	-	-	-	9	-	-	15	20
b) 1” Bag Filter 402mm L																							
(H289 x W391)mm	39GA509-388	-	-	1	-	-	-	-	-	-	-	-	-	-	-	-	-	-	-	-	-	-	-
(H391 x W595)mm	39GA509-384	-	1	1	-	-	2	-	-	-	-	-	-	-	-	-	-	-	-	-	-	-	-
(H289 x W595)mm	39GA509-381	1	-	-	4	-	2	2	3	3	3	-	2	5	5	5	4	-	4	7	8	4	4
(H595 x W595)mm	39GA509-386	-	-	-	-	2	-	2	2	3	3	6	6	6	6	6	8	12	12	12	15	20	20
c) 1” Bag Filter 450mm L																							
(H289 x W391)mm	39GA509-396	-	-	1	-	-	-	-	-	-	-	-	-	-	-	-	-	-	-	-	-	-	-
(H391 x W595)mm	39GA509-392	-	1	1	-	-	2	-	-	-	-	-	-	-	-	-	-	-	-	-	-	-	-
(H289 x W595)mm	39GA509-389	1	-	-	4	-	2	2	3	3	3	-	2	5	5	5	4	-	4	7	8	4	4
(H595 x W595)mm	39GA509-394	-	-	-	-	2	-	2	2	3	3	6	6	6	6	6	8	12	12	12	15	20	20
d) 1” Bag Filter 529mm L																							
(H289 x W391)mm	39GA509-380	-	-	1	-	-	-	-	-	-	-	-	-	-	-	-	-	-	-	-	-	-	-
(H391 x W595)mm	39GA509-376	-	1	1	-	-	2	-	-	-	-	-	-	-	-	-	-	-	-	-	-	-	-
(H289 x W595)mm	39GA509-373	1	-	-	4	-	2	2	3	3	3	-	2	5	5	5	4	-	4	7	8	4	4
(H595 x W595)mm	39GA509-378	-	-	-	-	2	-	2	2	3	3	6	6	6	6	6	8	12	12	12	15	20	20
e) 1” HVF Filter Washable																							
(H289 x W391)mm	39GA509-130	-	-	1	-	-	-	-	-	-	-	-	-	-	-	-	-	-	-	-	-	-	-
(H391 x W595)mm	39GA509-035	-	1	1	-	-	2	-	-	-	-	-	-	-	-	-	-	-	-	-	-	-	-
(H289 x W595)mm	39GA509-032	1	-	-	4	-	2	2	3	3	3	-	2	5	5	5	4	-	4	7	8	4	4
(H595 x W595)mm	39GA509-037	-	-	-	-	2	-	2	2	3	3	6	6	6	6	6	8	12	12	12	15	20	20
f) 2” HVF Filter Washable																							
(H289 x W391)mm	39GA509-131	-	-	1	-	-	-	-	-	-	-	-	-	-	-	-	-	-	-	-	-	-	-
(H391 x W595)mm	39GA509-041	-	1	1	-	-	2	-	-	-	-	-	-	-	-	-	-	-	-	-	-	-	-
(H289 x W595)mm	39GA509-038	1	-	-	4	-	2	2	3	3	3	-	2	5	5	5	4	-	4	7	8	4	4
(H595 x W595)mm	39GA509-043	-	-	-	-	2	-	2	2	3	3	6	6	6	6	6	8	12	12	12	15	20	20
g) 1” HVF Filter Disposable																							
(H289 x W391)mm	39GA509-128	-	-	1	-	-	-	-	-	-	-	-	-	-	-	-	-	-	-	-	-	-	-
(H391 x W595)mm	39GA509-023	-	1	1	-	-	2	-	-	-	-	-	-	-	-	-	-	-	-	-	-	-	-
(H289 x W595)mm	39GA509-020	1	-	-	4	-	2	2	3	3	3	-	2	5	5	5	4	-	4	7	8	4	4
(H595 x W595)mm	39GA509-025	-	-	-	-	2	-	2	2	3	3	6	6	6	6	6	8	12	12	12	15	20	20
h) 2” HVF Filter Disposable																							
(H289 x W391)mm	39GA509-129	-	-	1	-	-	-	-	-	-	-	-	-	-	-	-	-	-	-	-	-	-	-
(H391 x W595)mm	39GA509-029	-	1	1	-	-	2	-	-	-	-	-	-	-	-	-	-	-	-	-	-	-	-
(H289 x W595)mm	39GA509-026	1	-	-	4	-	2	2	3	3	3	-	2	5	5	5	4	-	4	7	8	4	4
(H595 x W595)mm	39GA509-031	-	-	-	-	2	-	2	2	3	3	6	6	6	6	6	8	12	12	12	15	20	20

Note: Dimension in mm

INTERNAL SPRING ISOLATOR ARRANGEMENT

				SPRING SELECTION (UBF/DBF) (For UBR/DBR, A<->B; C<->D)			
		MOTOR		FAN SIDE A/B		FREE SIDE C	MOTOR SIDE D
UNIT (39G)	FAN SIZE	HP	WGT(kg)	A	B	C	D
0508A	FCG02-160 (7kg)	1	15	514	513	513	515
		1.5	20	514	513	513	516
	FCG02-180 (9kg)	1.5	20	515	514	513	516
		2	22	515	514	513	516
0508B	FCG02-180 (9kg)	1.5	20	514	515	513	516
		2	22	515	515	513	516
0511	FCG02-200 (10kg)	1.5	20	515	514	513	516
		2	22	515	514	513	516
		3	30	515	514	513	516
0612	FCG02-225 (12kg)	2	22	515	514	513	516
		3	30	515	514	513	516
		4	30	515	514	513	516
		5	42	515	514	513	516/524
	BCG12-225 (15kg)	2	22	515	514	514	516
		3	30	515	514	514	516
		4	30	515	514	514	516
		5	42	515	514	514	516/524
0713	FCG02-280 (20kg)	3	30	515	515	514	516
		4	30	515	515	515	516
		5	42	516	515	515	516/524
		5.5	42	516	515	515	516/524
		7.5	65	516	515	515	517
	BCG12-280 (23kg)	3	30	516	515	514	516
		4	30	516	515	515	516
		5	42	516	515	515	516/524
		5.5	42	516	515	515	516/524
		7.5	65	516	515	515	517
0813	FCG02-315 (23kg)	4	30	516	515	515	516/524
		5	42	516	515	515	516/524
		5.5	42	516	515	515	516/524
		7.5	65	516	515	515	517
	BCG12-315 (27kg)	4	30	516	515	515	516
		5	42	516	515	515	516/524
		5.5	42	516	515	515	516/524
		7.5	65	516	515	515	517
0914	FCG02-355 (30kg)	4	30	516	516	516	516/524
		5	42	516	516	516	516/524
		5.5	42	516	516	516	516/524
		7.5	65	516	516	516	517
		10	76	516	516	516	517/524
	BCG12-355 (36kg)	4	30	516	516	516	516/524
		5	42	516	516	516	516/524
		5.5	42	516	516	516	516/524
		7.5	65	516	516	516	517/524
		10	76	516	516	516	517/524
0916	FCG02-355 (30kg)	4	30	516	516	515	516/524
		5	42	516	516	515	516/524
		5.5	42	516	516	515	516/524
		7.5	65	516	516	515	517/524
	BCG12-355 (36kg)	4	30	516	516	515	516
		5	42	516	516	515	516/524
		5.5	42	516	516	515	516/524
		7.5	65	516	516	515	517/524
		10	76	516	516	515	517/524
		15	118	516/524	516	515	518/524

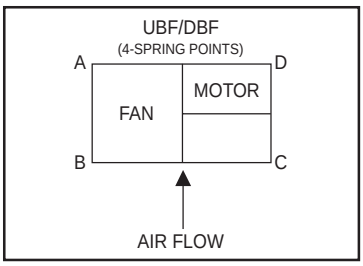

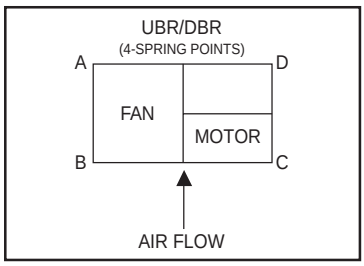

INTERNAL SPRING ISOLATOR ARRANGEMENT (Con't)

				SPRING SELECTION (UBF/DBF) (For UBR/DBR, A<->B; C<->D)			
		MOTOR		FAN SIDE A/B		FREE SIDE C	MOTOR SIDE D
UNIT (39G)	FAN SIZE	HP	WGT(kg)	A	B	C	D
1018	FCG02-400 (45kg)	5	42	516	516	516	516/524
		5.5	42	516/524	516	516	516/524
		7.5	65	516/524	516	516	517/524
		10	76	516/524	516	516	517/524
	FCG05-450 (65kg)	5	42	516	516	516	517
		5.5	42	516	516	516	517
		7.5	65	516/524	516	516	517/524
		10	76	516/524	516	516	518
	BCG15-400 (61kg)	5.5	42	516	516	516	517
		7.5	65	516/524	516	516	517/524
		10	76	516/524	516	516	517/524
		15	118	516/524	516	516	519
	BCG15-450 (73kg)	5.5	42	516	516/524	516	517
		7.5	65	516/524	516/524	516	517/524
		10	76	516/524	516/524	516	518
		15	118	516/524	516/524	516	519
1118	FCG05-450 (65kg)	7.5	65	516/524	516	516	517/524
		10	76	516/524	516	516	517/524
	BCG15-450 (73kg)	10	76	516/524	516	516	517/524
		15	118	516/524	516/524	516	519
1319	FCG05-450 (65kg)	7.5	65	516/524	516	516	517/524
		10	76	516/524	516	516	517/524
		15	118	517/524	516/524	516	519
	FCG05-500 (80kg)	7.5	65	516/524	516/524	516	517/524
		10	76	516/524	516/524	516	518
		15	118	516/524	516/524	516	519
	BCG15-450 (73kg)	15	118	516/524	516/524	516	519
		20	139	517	516/524	516	519/524
	BCG15-500 (94kg)	15	118	517	517	517	519
		20	139	517	517	517	519/524
1422	FCG05-500 (80kg)	10	76	517	516/524	516/524	518
		15	118	517	516/524	517	518
		20	139	517	516/524	517	518/524
		25	189	517	516/524	517	519/524
1422	BCG15-500 (94kg)	10	76	516/524	516/524	516	517
		15	118	517	517	516/524	518
		20	139	517/524	517	516/524	518/524
		25	189	517/524	517	517	519/524
1422 1522	FCG02-560 (97kg)	10	76	517	516/524	516	517/524
		15	118	517/524	517/524	516/524	518
		20	139	517/524	517/524	517	518/524
		25	189	517/524	517/524	517	519/524
1422 1522	BCG15-560 (125kg)	15	118	517/524	517	517	518
		20	139	517/524	517/524	517/524	519/524
		25	189	517/524	517/524	517/524	519/524
1522 1722 1724	FCG02-630 (115kg)	15	118	517/524	518	516/524	519
		20	139	517/524	518	516/524	519
		25	189	517/524	518	517	520
		30	203	517/524	518	517	520
1522 1722 1724	BCG15-630 (149kg)	15	118	517/524	517/524	517	518/524
		20	139	517/524	518	517	519
		25	189	518	518	517	520
		30	203	518	518	517	520/524

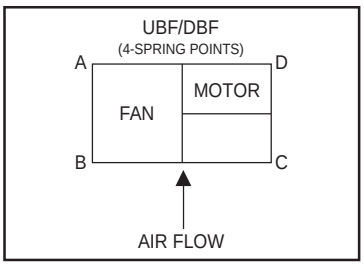

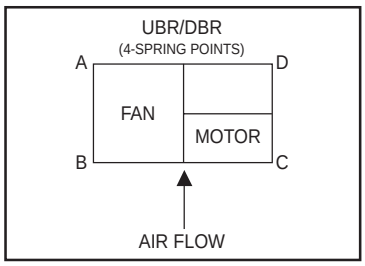

INTERNAL SPRING ISOLATOR ARRANGEMENT (Con't)

				SPRING SELECTION (UBF/DBF) (For UBR/DBR, A<->B; C<->D)			
		MOTOR		FAN SIDE A/B		FREE SIDE C	MOTOR SIDE D
UNIT (39G)	FAN SIZE	HP	WGT(kg)	A	B	C	D
1725	BCG15-630 (149kg)	15	118	517/524	517/524	516/524	518/524
		20	139	517/524	517/524	516/524	519
		25	189	518	517/524	517	520
		30	203	518/524	518	517/524	520/524
1722 1724 1725 1926	FCG02-710 (175kg)	20	139	518/524	518	517	519
		25	189	518/524	518	517	520
		30	203	518/524	518	517	520/524
		40	290	518/524	518	517/524	522
1722 1724 1725 1926	BCG15-710 (201kg)	20	139	519	518	517/524	519
		25	189	519	518	517/524	520
		30	203	519	518/524	517/524	520/524
		40	290	519	518/524	517/524	522/524
		50	320	519	518/524	517/524	523
1725	FCG05-630 (137kg)	15	118	517/524	517	516/524	518/524
		20	139	517/524	518	516/524	519
		25	189	518	518	517	520
		30	203	518/524	518	517/524	520
1926	FCG05-800/GI (233kg)	20	139	518/524	518/524	517	519/524
		25	189	519	518/524	517	520/524
		30	203	519	518/524	517	520/524
		40	290	519/524	518/524	517/524	522/524
		50	320	519/524	518/524	517/524	523
		60	355	519/524	518/524	518	525
1926	BCG15-800/GI (250kg)	20	139	519	518/524	517	519/524
		25	189	519	518/524	517	520/524
		30	203	519	519	517	521
		40	290	519/524	519	517/524	522/524
		50	320	520	519	518	523/524
		60	355	520	519	518	525

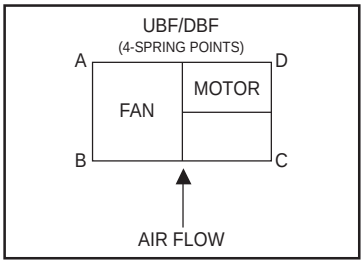

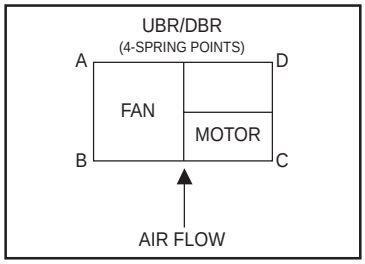

INTERNAL SPRING ISOLATOR ARRANGEMENT (Con't)

				SPRING SELECTION (UBF/DBF) (For UBR/DBR, A<->B; C<->D; E<->F)					
		MOTOR		FAN SIDE A/B		FREE SIDE C	MOTOR SIDE C	MIDDLE SIDE E/F	
UNIT (39G)	FAN SIZE	HP	WGT(kg)	A	B	C	D	E	F
2127	FCG05-710 (183kg)	20	139	517	517/524	516	517/524	517/524	519
		25	189	517	517/524	516	518	517/524	519/524
		30	203	517	517/524	516	518/524	517/524	519/524
		40	290	517	517/524	516/524	519/524	518	521
		50	320	517	517/524	516/524	520	518	521
2127	BCG15-710 (201kg)	20	139	517/524	518	516	517/524	517/524	519
		25	189	517/524	518	516	518	517/524	519/524
		30	203	517/524	518	516	518/524	517/524	519/524
		40	290	517/524	518	516/524	519/524	518	521
		50	320	517/524	518	516/524	520	518	521
2127 2230 2234	FCG05-800/GI (233kg)	20	139	518	518/524	516	517/524	517/524	519
		25	189	518	518/524	516	518/524	517/524	519/524
		30	203	518	518/524	516	518/524	517/524	520
		40	290	518	518/524	516/524	520	518	521
		50	320	518	518/524	516/524	520	518	521/524
		60	355	518	518/524	516/524	520/524	518/524	522
2127 2230 2234	BCG15-800/GI (250kg)	20	139	518	518/524	516	517/524	517/524	519
		25	189	518	518/524	516	518/524	518	520
		30	203	518	518/524	516	518/524	518	520
		40	290	518	519	516/524	519/524	518	521
		50	320	518	519	517	520/524	518/524	521/524
		60	355	518	519	517	520/524	518/524	522
2230 2234 2434 2636	FCG05-900/GI (316kg)	25	189	518/524	519/524	516	518/524	518/524	520/524
		30	203	518/524	519/524	516	518/524	518/524	520/524
		40	290	518/524	519/524	516/524	520	518/524	521/524
		50	320	518/524	519/524	516/524	520	519	522
		60	355	518/524	519/524	516/524	520/524	519	522/524
		75	520	518/524	519/524	517	523	519	525/524
2230 2234 2434 2636	BCG15-900/GI (358kg)	25	189	519	520	516	518/524	518/524	520/524
		30	203	519	520	516	518/524	518/524	521
		40	290	519	520	516/524	520	519	522
		50	320	519	520	516/524	520	519	522/524
		60	355	519	520	516/524	520/524	519	523
		75	520	519	520	517	523	519/524	525/524
2434 2636	FCG05-1000/GI (376kg)	25	189	518/524	520	516	519	519	520/524
		30	203	518/524	520	516	519	519	521
		40	290	518/524	520	516	520/524	519	522
		50	320	518/524	520	516	521	519	522/524
		60	355	518/524	520	516	521/524	519/524	523
		75	520	518/524	520	516/524	525	519/524	525/524
2434 2636	BCG15-1000/GI (416kg)	25	189	519	520/524	516	519	519/524	520/524
		30	203	519	520/524	516	519	519/524	521
		40	290	519	520/524	516	520/524	519/524	522
		50	320	519	520/524	516	521	519/524	522/524
		60	355	519	520/524	516	521/524	519/524	523
		75	520	519	520/524	516/524	525	520	525/524

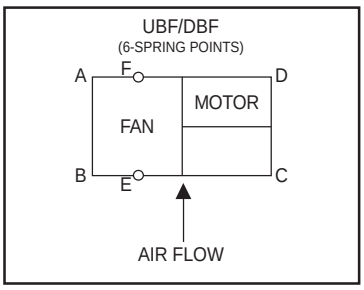

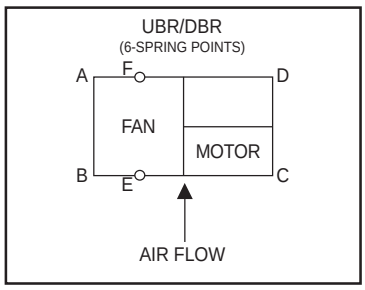

INTERNAL SPRING ISOLATOR ARRANGEMENT (Con't)

				SPRING SELECTION (THF/BHF) (For THR/BHR, A<->B; C<->D)			
		MOTOR		FAN SIDE A/B		MOTOR SIDE C	FREE SIDE D
UNIT (39G)	FAN SIZE	HP	WGT(kg)	A	B	C	D
0508A	FCG02-160 (7kg)	1	15	513	514	515	513
		1.5	20	513	514	516	513
	FCG02-180 (9kg)	1.5	20	513	515	516	513
		2	22	513	515	516	513
0508B	FCG02-180 (9kg)	1.5	20	514	515	516	513
		2	22	514	515	516	513
0511	FCG02-200 (10kg)	1.5	20	515	513	515	515
		2	22	515	513	515	515
		3	30	515	513	516	515
0612	FCG02-225 (12kg)	2	22	514	515	516	515
		3	30	514	516	516	515
		4	30	514	516	516	515
		5	42	515	516	516/524	515
	BCG12-225 (15kg)	2	22	515	515	516	515
		3	30	515	515	516	515
		4	30	515	515	516	515
		5	42	515	515	516/524	515
0713	FCG02-280 (20kg)	3	30	515	515	516	514
		4	30	515	516	516	515
		5	42	515	516	516/524	515
		5.5	42	515	516	516/524	515
		7.5	65	515	516	517	515
	BCG12-280 (23kg)	3	30	515	516	516	514
		4	30	515	516	516	515
		5	42	515	516	516	515
		5.5	42	515	516	516	515
		7.5	65	515	516	517	515
0813	FCG02-315 (23kg)	4	30	515	516	516/524	515
		5	42	515	516	516/524	515
		5.5	42	515	516	516/524	515
		7.5	65	515	516/524	517	515
	BCG12-315 (27kg)	4	30	515	516	516	515
		5	42	515	516	516/524	515
		5.5	42	515	516	516/524	515
		7.5	65	515	516	517	515
0914	FCG02-355 (30kg)	4	30	515	516	516/524	515
		5	42	515	516	516/524	515
		5.5	42	515	516	516/524	515
		7.5	65	515	516	517/524	515
		10	76	515	516	517/524	515
	BCG12-355 (36kg)	4	30	515	516	516/524	515
		5	42	515	516	516/524	515
		5.5	42	515	516	516/524	515
		7.5	65	516	516	517/524	515
		10	76	516	516	517/524	515
0916	FCG02-355 (30kg)	4	30	515	516	516/524	515
		5	42	515	516	516/524	515
		5.5	42	515	516	516/524	515
		7.5	65	515	516	517	515
	BCG12-355 (36kg)	4	30	516	516	516	515
		5	42	516	516	516/524	515
		5.5	42	516	516	516/524	515
		7.5	65	516	516	517	515
		10	76	516	516/524	517/524	515
		15	118	516	516/524	518/524	515

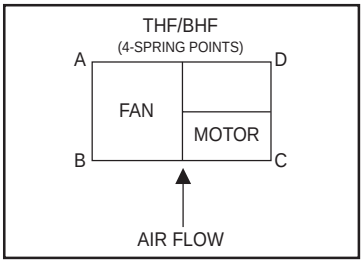

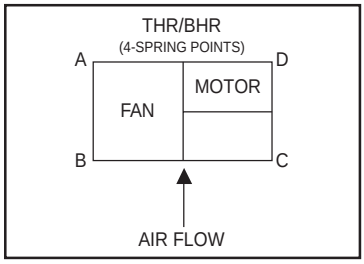

INTERNAL SPRING ISOLATOR ARRANGEMENT (Con't)

				SPRING SELECTION (THF/BHF) (For THR/BHR, A<->B; C<->D)			
		MOTOR		FAN SIDE A/B		MOTOR SIDE C	FREE SIDE D
UNIT (39G)	FAN SIZE	HP	WGT(kg)	A	B	C	D
1018	FCG02-400 (45kg)	5	42	516	516	516/524	516
		5.5	42	516	516	516/524	516
		7.5	65	516	516	517/524	516
		10	76	516	516	517/524	516
	FCG05-450 (65kg)	5	42	516	516	517	516
		5.5	42	516	516	517	516
		7.5	65	516	516	518	516
		10	76	516	516	518	516
	BCG15-400 (61kg)	5.5	42	516	516	517	516
		7.5	65	516	516/524	517/524	516
		10	76	516	516/524	517/524	516
		15	118	516	516/524	519	516
	BCG15-450 (73kg)	5.5	42	516	516	517	516
		7.5	65	516	516/524	517/524	516
		10	76	516	516/524	518	516
		15	118	516	516/524	519	516
1118	FCG05-450 (65kg)	7.5	65	516	516/524	517/524	516
		10	76	516	516/524	517/524	516
	BCG15-450 (73kg)	10	76	516	516/524	517/524	516
		15	118	516	516/524	519	516
1319	FCG05-450 (65kg)	7.5	65	516	516/524	517/524	516
		10	76	516	516/524	517/524	516
		15	118	516	516/524	519	516
	FCG05-500 (80kg)	7.5	65	516/524	516/524	517/524	516
		10	76	517	517	518	516
		15	118	517	517	519	516
	BCG15-450 (73kg)	15	118	516	516/524	519	516
		20	139	516	517	519/524	516
	BCG15-500 (94kg)	15	118	517	517	519	516/524
		20	139	517	517	519/524	516/524
1422	FCG05-500 (80kg)	10	76	516/524	516/524	517	516/524
		15	118	516/524	516/524	517/524	516/524
		20	139	516/524	517	518	517
		25	189	517	517	519	517
1422	BCG15-500 (94kg)	10	76	517	516/524	517	516/524
		15	118	517	516/524	518	516/524
		20	139	517	516/524	518	517
		25	189	517	517	519	517/524
1422 1522	FCG02-560 (97kg)	10	76	517	516/524	517	516
		15	118	517	516/524	518	516/524
		20	139	517	516/524	518/524	516/524
		25	189	517	517	519/524	517
1422 1522	BCG15-560 (125kg)	15	118	517/524	517	518	516/524
		20	139	517/524	517	518/524	517
		25	189	517/524	517/524	519/524	517
1522 1722 1724	FCG02-630 (115kg)	15	118	517/524	517/524	518	517
		20	139	517/524	517/524	518/524	517
		25	189	517/524	517/524	519/524	517/524
		30	203	517/524	517/524	520	517/524
1522 1722 1724	BCG15-630 (149kg)	15	118	517/524	517/524	518	517
		20	139	518	517/524	519	517
		25	189	518	517/524	519/524	517/524
		30	203	518	517/524	520	517/524

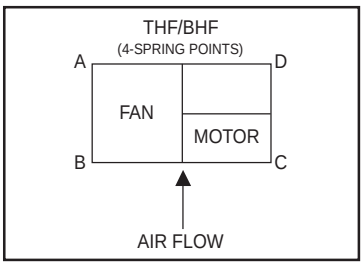

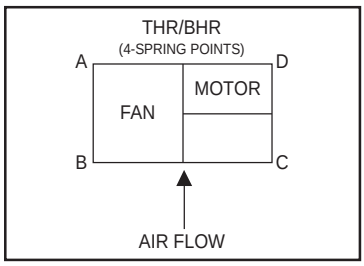

INTERNAL SPRING ISOLATOR ARRANGEMENT (Con't)

				SPRING SELECTION (THF/BHF) (For THR/BHR, A<->B; C<->D)			
		MOTOR		FAN SIDE A/B		MOTOR SIDE C	FREE SIDE D
UNIT (39G)	FAN SIZE	HP	WGT (kg)	A	B	C	D
1725	BCG15-630 (149kg)	15	118	517/524	517	518	517
		20	139	518	517/524	518/524	517
		25	189	518	517/524	519/524	517/524
		30	203	518	517/524	520	517/524
1722 1724 1725 1926	FCG02-710 (175kg)	20	139	518	517/524	518/524	517
		25	189	518	517/524	519/524	517/524
		30	203	518	517/524	520	517/524
		40	290	518/524	518	521/524	518/524
1722 1724 1725 1926	BCG15-710 (201kg)	20	139	518/524	518/524	518/524	517/524
		25	189	518/524	518/524	519/524	517/524
		30	203	518/524	518/524	520	518
		40	290	519	518/524	521/524	518/524
		50	320	519	518/524	523	518/524
1725	FCG05-630 (137kg)	15	118	518	517	518/524	517
		20	139	518	517	518/524	517
		25	189	518	517/524	519/524	517/524
		30	203	518	517/524	520	517/524
1926	FCG05-800/GI (233kg)	20	139	519	518	519	517
		25	189	519	518/524	520	517/524
		30	203	519	518/524	520/524	517/524
		40	290	519/524	518/524	522	518
		50	320	519/524	519	522/524	518/524
		60	355	519/524	519	523/524	518/524
1926	BCG15-800/GI (250kg)	20	139	519/524	518	519	517/524
		25	189	519/524	518/524	520	517/524
		30	203	519/524	518/524	520/524	517/524
		40	290	519/524	519	522	518
		50	320	519/524	519	522/524	518/524
		60	355	519/524	519	523/524	518/524

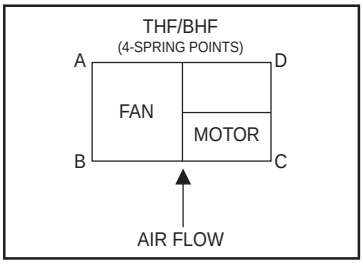

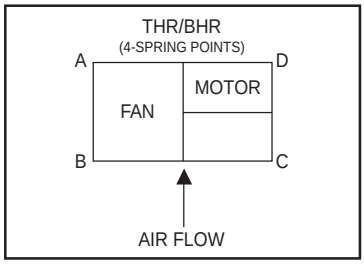

INTERNAL SPRING ISOLATOR ARRANGEMENT (Con't)

				SPRING SELECTION (THF/BHF) (For THR/BHR, A<->B; C<->D; E<->F)					
		MOTOR		FAN SIDE A/B		FREE SIDE C	MOTOR SIDE C	MIDDLE SIDE E/F	
UNIT (39G)	FAN SIZE	HP	WGT(kg)	A	B	C	D	E	F
2127	FCG05-710 (183kg)	20	139	517/524	517	518	516	519	518
		25	189	517/524	517	518/524	516	519	518
		30	203	517/524	517	518/524	516	519/524	518
		40	290	517/524	517	520	516/524	520/524	518
		50	320	517/524	517	520	516/524	521	518/524
2127	BCG15-710 (201kg)	20	139	518	517	517/524	516	518/524	517/524
		25	189	518	517	518	516/524	519	518
		30	203	518	517	518	516/524	519	518
		40	290	518	517	519/524	516/524	520	518/524
		50	320	518	517	519/524	517	520/524	518/524
2127 2230 2234	FCG05-800/GI (233kg)	20	139	518/524	517/524	517/524	516	518/524	518
		25	189	518/524	517/524	518	516/524	519	518
		30	203	519	518	518/524	516/524	519/524	518
		40	290	519	518	519/524	516/524	520/524	518/524
		50	320	519	518	519/524	517	521	518/524
		60	355	519	518	520	517	521	519
2127 2230 2234	BCG15-800/GI (250kg)	20	139	519	517/524	517/524	516	518/524	518
		25	189	519	517/524	518	516	519/524	518/524
		30	203	519	517/524	518/524	516/524	519/524	518/524
		40	290	519	517/524	519/524	516/524	520/524	518/524
		50	320	519	517/524	519/524	517	521	519
		60	355	519	517/524	520	517	521/524	519
2230 2234 2434 2636	FCG05-900/GI (316kg)	25	189	519/524	518	518/524	516	519/524	519
		30	203	519/524	518	518/524	516/524	520	519
		40	290	519/524	518	519/524	516/524	521	519
		50	320	519/524	518	520	517	521/524	519/524
		60	355	519/524	518	520/524	517	522	519/524
		75	520	519/524	518	523	517/524	525	520
2230 2234 2434 2636	BCG15-900/GI (358kg)	25	189	521	519	518/524	516	520	519
		30	203	521	519	519	516/524	520	520
		40	290	521	519	519/524	516/524	521	520
		50	320	521	519	520	516/524	521/524	520
		60	355	521	519	520/524	517	522	520
		75	520	521	519	523	517/524	525	520/524
2434 2636	FCG05-1000/GI (376kg)	25	189	520	518/524	519	516	520/524	519
		30	203	520	518/524	519	516	520/524	519
		40	290	520	518/524	520/524	516	522	519/524
		50	320	520	518/524	521	516	522/524	519/524
		60	355	520	518/524	521/524	516	523	519/524
		75	520	520	518/524	525	516/524	525/524	520
2434 2636	BCG15-1000/GI (416kg)	25	189	520/524	519	519	516	520/524	519/524
		30	203	520/524	519	519	516	521	519/524
		40	290	520/524	519	520/524	516	522	519/524
		50	320	520/524	519	521	516	522/524	519/524
		60	355	520/524	519	521/524	516/524	523	520
		75	520	520/524	519	525	516/524	525/524	520

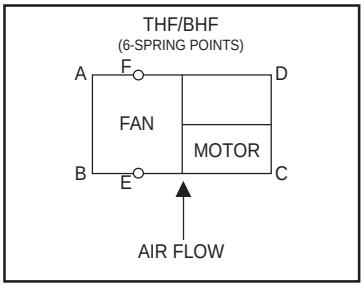

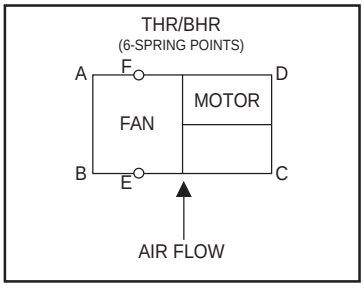

DIMENSION

Unit Size	Fan Size	Range Of Hp	Nominal Capacity (kW)	Nominal A/Flow @2.5m m/s	Section Length							Unit HH* (mm)	Unit Width (mm)	Unit HV** (mm)
					MXB (G)	Filter			Access (C)	Coil (B)	Fan (A)			
						HVF (F)	LVF (E)	BF (D)						
0508A	FCG 02-160	1 ~ 1.5	7.9	425	600	300	600	600	600	500	500	500	800	1000
	FCG 02-180	1.5 ~ 2												
0508B	FCG 02-180	1.5 ~ 2	11.4	614	600	300	600	600	600	500	500	500	800	1000
0511	FCG 02-200	1.5 ~ 3	15.8	850	600	300	600	600	600	500	600	500	1100	1000
0612	FCG 02-225	2 ~ 4	22.9	1227	600	300	600	600	600	500	600	600	1200	1200
	BCG 12-225	3 ~ 5												
0713	FCG 02-280	3 ~ 5	32.5	1746	600	300	600	600	600	500	700	700	1300	1400
	BCG 02-280	4 ~ 7.5												
0813	FCG 02-315	4 ~ 5	37.8	2030	600	300	600	600	600	500	800	800	1300	1600
	BCG 12-315	5 ~ 7.5												
0914	FCG 02-355	4 ~ 7.5	48.8	2620	600	300	600	600	600	500	900	900	1400	1800
	BCG 12-355	5 ~ 10												
0916	FCG 02-355	4 ~ 7.5	53.6	2879	600	300	600	600	600	500	900	900	1600	1800
	BCG 12-355	7.5 ~ 15												
1018	FCG 02-400	5 ~ 10	66.8	3587	600	300	600	600	600	500	1000	1000	1800	2000
	BCG 15-400	7.5 ~ 15												2100
1118	FCG 05-450	7.5 ~ 15	78.2	4201	600	300	600	600	600	500	1000	1100	1800	2200
	BCG 15-450	10 ~ 15												
1319	FCG 05-450	7.5 ~ 15	96.7	5192	600	300	600	600	600	500	1000	1300	1900	2400
	BCG 15-450	10 ~ 15												
	FCG 05-500	10 ~ 20			600	300	600	600	600	500	1100			2500
	BCG 15-500	15 ~ 20												
1422	FCG 05-500	10 ~ 15	109.8	5900	900	300	600	600	600	500	1100	1400	2200	2600
	BCG 15-500	10 ~ 15												
	FCG 02-560	15 ~ 20			900	300	600	600	600	500	1200			2700
	BCG 15-560	15 ~ 20												
1522	FCG 02-560	10 ~ 20	118.6	6372	900	300	600	600	600	500	1200	1500	2200	2800
	BCG 15-560	15 ~ 20												
	FCG 02-630	15 ~ 25			900	300	600	600	600	500	1400			3000
	BCG 15-630	20 ~ 25												
1722	FCG 02-630	15 ~ 20	136.2	7316	900	300	600	600	600	500	1400	1700	2200	3200
	BCG 15-630	15 ~ 25												
	FCG 02-710	20 ~ 25			900	300	600	600	600	500	1500			3300
	BCG 15-710	20 ~ 30												
1724	FCG 02-630	15 ~ 25	153.6	8280	900	300	600	600	600	500	1400	1700	2400	3200
	BCG 15-630	15 ~ 25												
	FCG 02-710	20 ~ 30			900	300	600	600	600	500	1500			3300
	BCG 15-710	20 ~ 30												
1725	FCG 05-630	15 ~ 25	166.9	8988	900	300	600	600	600	500	1400	1700	2500	3200
	BCG 15-630	15 ~ 25												
	FCG 02-710	20 ~ 30			900	300	600	600	600	500	1500			3300
	BCG 15-710	25 ~ 40												
1926	FCG 02-710	15 ~ 25	184.5	9912	1300	300	600	600	600	500	1500	1900	2600	3500
	BCG 15-710	20 ~ 30												
	FCG 05-800	25 ~ 40			1300	300	600	600	600	500	1700			3700
	BCG 15-800	25 ~ 40												
2127	FCG 05-710	15 ~ 25	215.3	11564	1300	300	600	600	600	500	1500	2100	2700	3700
	BCG 15-710	20 ~ 30												
	FCG 05-800/GI	25 ~ 40			1300	300	600	600	600	500	1700			3900
	BCG 15-800/GI	30 ~ 50												
2230	FCG 05-800	20 ~ 30	254.8	13688	1300	300	600	600	600	500	1700	2200	3000	4000
	BCG 15-800	20 ~ 30												
	FCG 05-900	30 ~ 50			1300	300	600	600	600	500	1900			4200
	BCG 15-900	40 ~ 50												
2234	FCG 05-800/GI	20 ~ 40	298.7	16048	1300	300	600	600	600	500	1700	2200	3400	4000
	BCG 15-800/GI	20 ~ 40												
	FCG 05-900/GI	30 ~ 60			1300	300	600	600	600	500	1900			4200
	BCG 15-900/GI	40 ~ 60												
2434	FCG 05-900	25 ~ 40	325.1	17464	1300	300	600	600	600	500	1900	2400	3400	4400
	BCG 15-900	25 ~ 40												
	FCG 05-1000	40 ~ 60			1300	300	600	600	600	500	2000			4500
	BCG 15-1000	40 ~ 60												
2636	FCG 05-900/GI	25 ~ 50	377.8	20296	1300	300	600	600	600	500	1900	2600	3600	4600
	BCG 15-900/GI	25 ~ 50												
	FCG 05-1000	40 ~ 75			1300	300	600	600	600	500	2000			4700
	BCG 15-1000	40 ~ 75												

*HH - Height Horizontal **HV - Height Vertical

1) External AHU Length = (Section Length + K) mm

K = 110mm for 25mm casing thickness

160mm for 50mm casing thickness

2) External AHU Width = (Unit Width + K) mm

3) For Horizontal Unit, External AHU Height = (HH + K + 100*) mm
For Vertical Unit, External AHU Height = (HV + 2K + 100*) mm

*100mm is for unit base

4) If the External AHU Length is > 1900mm, section will be split into several casing for shipping purposes.

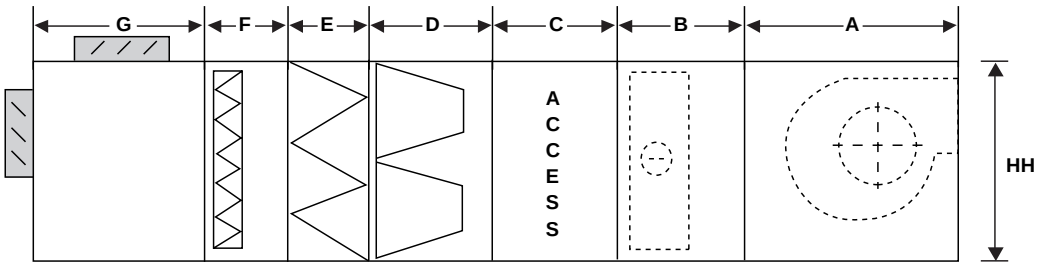

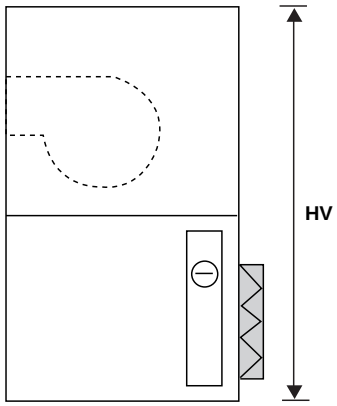

MEMO

Carrier International Sdn. Bhd. Malaysia

Carrier International Sdn. Bhd. (3385-T)
Lot 4, Jalan P/6, 43650 Bandar Baru Bangi,
Selangor, Malaysia.
Tel: 03-8925 8001
Fax: 03-8925 3578

39G	Rev. 4
05	2003

39GA 509-058

Manufacturer reserves the right to discontinue, or change at any time, specifications or designs without notice and without incurring obligations.