TOSHIBA

TOSHIBA

FILE NO : A04-004

Quick reference

SUPER MODULAR MULTI

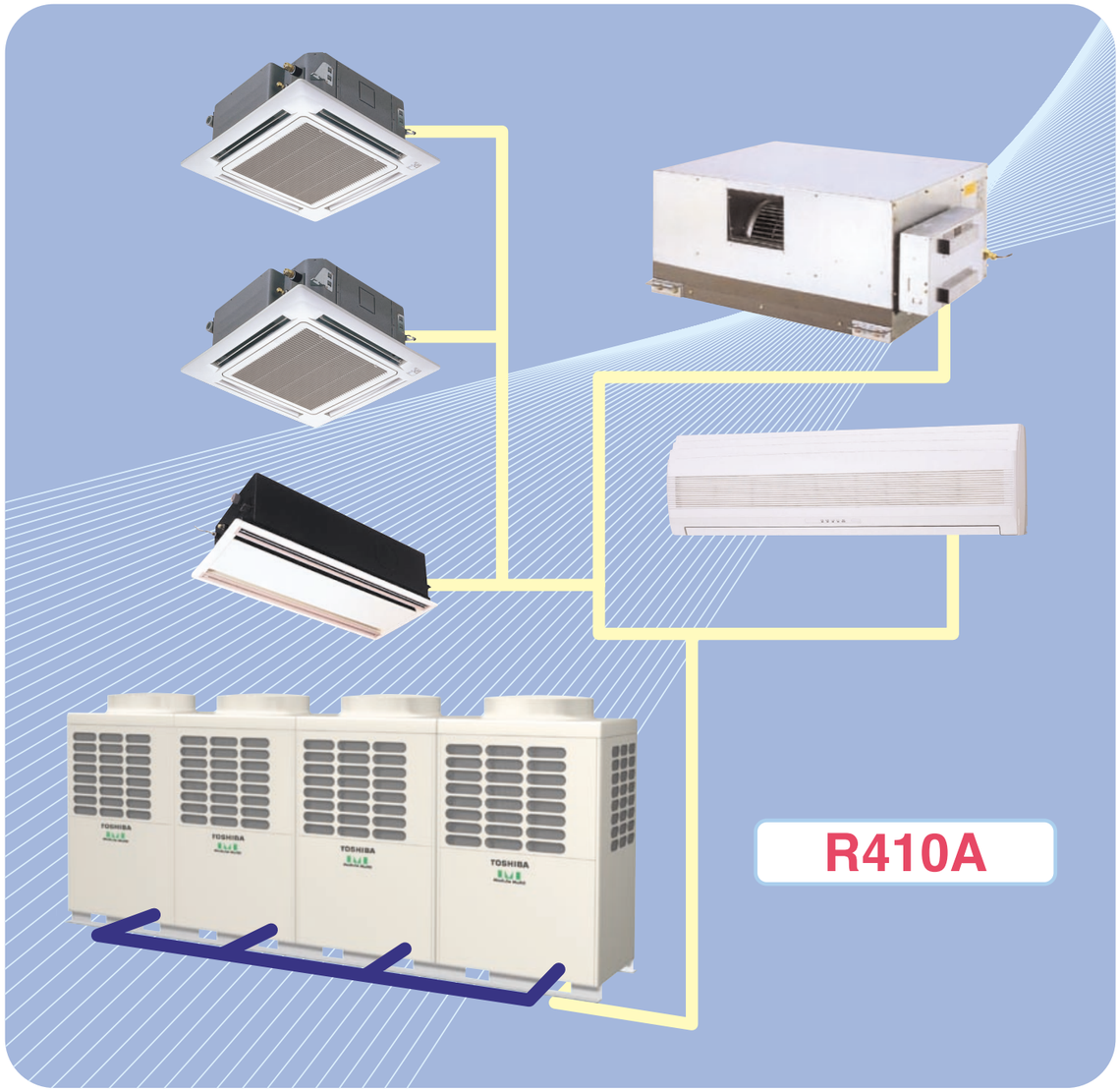

Allowable length of refrigerant pipe and height difference

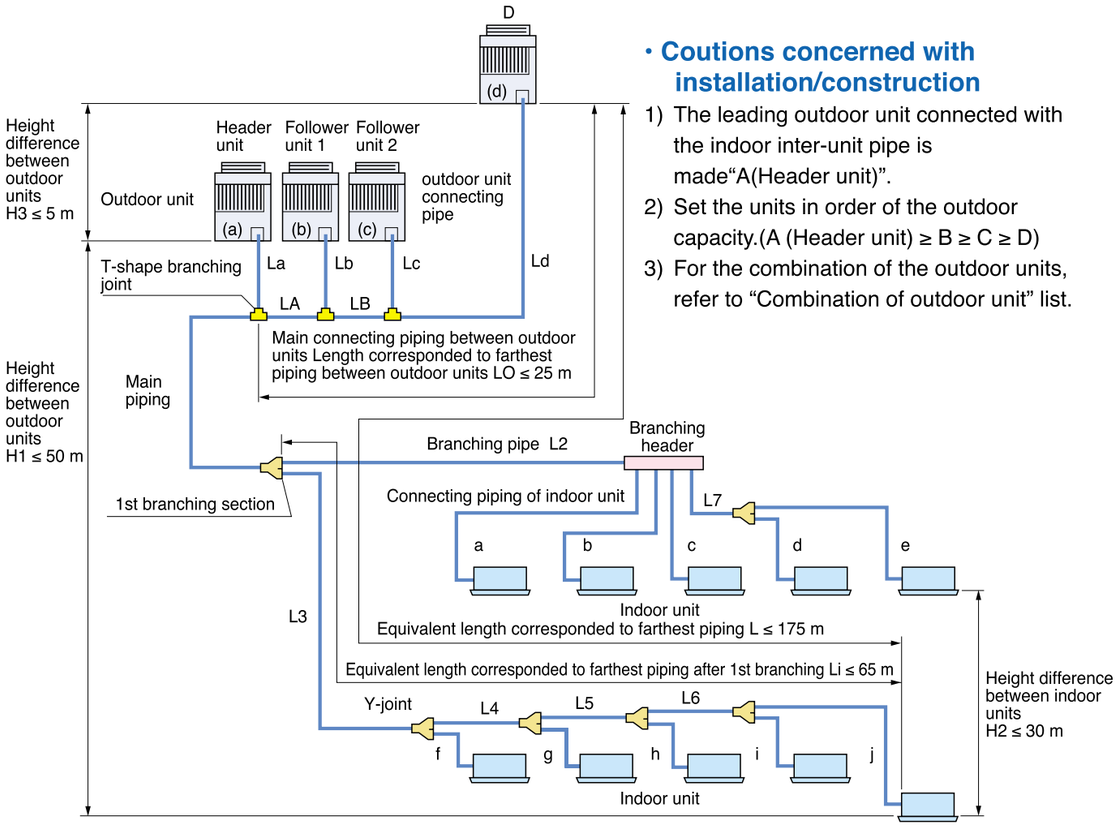

• Coutions concerned with installation/construction

1) The leading outdoor unit connected with the indoor inter-unit pipe is made“A(Header unit)”.
2) Set the units in order of the outdoor capacity.(A (Header unit) ≥ B ≥ C ≥ D)
3) For the combination of the outdoor units, refer to “Combination of outdoor unit” list.

• Restriction to the system

Max. No. of outdoor units	4 units	
Max. capacity of outdoor units	48HP	
Max. No. of indoor units	48 units	
Max. capacity of indoor units (Depond on by height dif. between indoor units)	H2 < 15m	135% of capa. of outdoor unit
	15m < H2 < 30m	105% of capa. of outdoor unit

• Allowable length/height difference of the refrigerant pipe

			Allowable value
Pipe length	Total extended pipe length(Liquid pipe/real length)		300m
	Farhest equivalent piping length L (*1)		175m
	Max. equivalent length of main pipe (*3)		85m
	Farthest equivalent piping length from 1st baranch Li (*1)		65m
	Farthest equivalent piping length between outdoor units LO (*1)		25m
	Max. equivalent length of outdoor unit connecting pipe		10m
	Max. real length of outdoor unit connecting pipe		30m
Height difference	Height difference between indoor unit and outdoor unit H1	Outdoor at upper side	50m
		Outdoor at lower side	40m (*2)
	Height difference between indoor units H2		30m
	Height difference betwenn outdoor units H3		5m

*1 : Farthest outdoor unit: (d), farthest indoor unit: (j) from 1st branch
*2 : If the height difference (H2) between indoor units exceeds 3m, set below 30m.
*3 : If Max. capacity of the combined outdoor units exceeds 46HP, Max. equivalent length is up to 70m.

Addition of refrigerant

Calculation of refrigerant

- Keeping valve of the outdoor unit colsed, be sure to charge the liquid refrigerant into service port at liquid side.
- if the specified amount of refrigerant cannot be charged, open fully valves of outdoor unit at liquid and gas sides,operate the air conditioner in COOL mode under condition that valve at gas side is a little returned to close side (MAP0801*, MAP1001*, MAP1201* only), and then charge refrigerant into service port at gas side. In this time, choke the refrigerant slightly by operating valve of the bomb to charge liquid refrigerant. The liquid refrigerant may be charged suddenly, therefore be sure to charge refrigerant gradually.
- When refrigerant leaks and refrigerant shortage occurs in the system, recover the refrigerant in the system and recharge refrigerant newly up to the correct level.

Table 2

Liquid pipe dia. (mm)	6.4	9.5	12.7	15.9	19.1	22.2
Additional refrigerant amount/1m quid pipe (kg/m)	0.025	0.055	0.105	0.160	0.250	0.350

Table 1

Combined HP (HP)	Combined outdoor units (HP)				C (Corrective amout ofrefrigernt) (kg)
5	5				0.0
6	6				0.0
8	8				1.5
10	10				2.5
12	12				3.5
14	8	6			0.0
16	8	8			0.0
18	10	8			0.0
20	10	10			3.0
22	12	10			5.0
	8	8	6		0.0
24	12	12			7.0
	8	8	8		–4.0
26	10	8	8		–4.0
28	10	10	8		–2.0
30	10	10	10		0.0
32	12	10	10		1.0
	8	8	8	8	–6.0
34	12	12	10		3.0
	10	8	8	8	–6.0
36	12	12	12		4.0
	10	10	8	8	–6.0
38	10	10	10	8	–6.0
40	10	10	10	10	–5.0
42	12	10	10	10	–4.0
44	12	12	10	10	–2.0
46	12	12	12	10	0.0
48	12	12	12	12	2.0

REQUEREMENT

<Entry of refrigerant charge amount>

- Fill the additional refrigerant record column of the wiring diagram indication plate with the additional refrigerant amount at installation work, total refrigerant amount and the name of the service ma who charged refrigerant at installation time.
- The total refrigerant amount means the total value of the refrigerant amount at shipment and the additional refrigerant amount at installation time. the refrigerant amount at the shipment is one described on the “Unit nameplate”.

After cacuuming work, exchange the vacuum pump with the refrigerant bomb and then start the additional charging work of refrigerant.

Calculation of additional refrigerant carge amount

Refrigerant charge amount at shipment from the factory does not include the refrigerant for pipe at the local site.
For refrigeranto to be charged in pipe at the local site, calculate the amount and charge it additionally.
NOTE) If the additional refrigerant amount indicates minus as the result of calculation, use the air conditioner without addition of refrigerant.

Heat pump model	Outdoor unit Model **(MMY-)**	**MAP0501HT***	**MAP0601HT***	**MAP0801HT***	**MAP1001HT***	**MAP1201HT***
	Charging amout (kg)	8.5		12.5		

Cooling only model	Outdoor unit Model **(MMY-)**	**MAP0501T8**	**MAP0601T8**	**MAP0801T8**	**MAP1001T8**	**MAP1201T8**
	Charging amout (kg)	8.0		11.0		

Refrigerant Piping Diagram <Outdoor>

Inverter Unit 5, 8HP Model: MMY-MAP0501HT, MAP0601HT

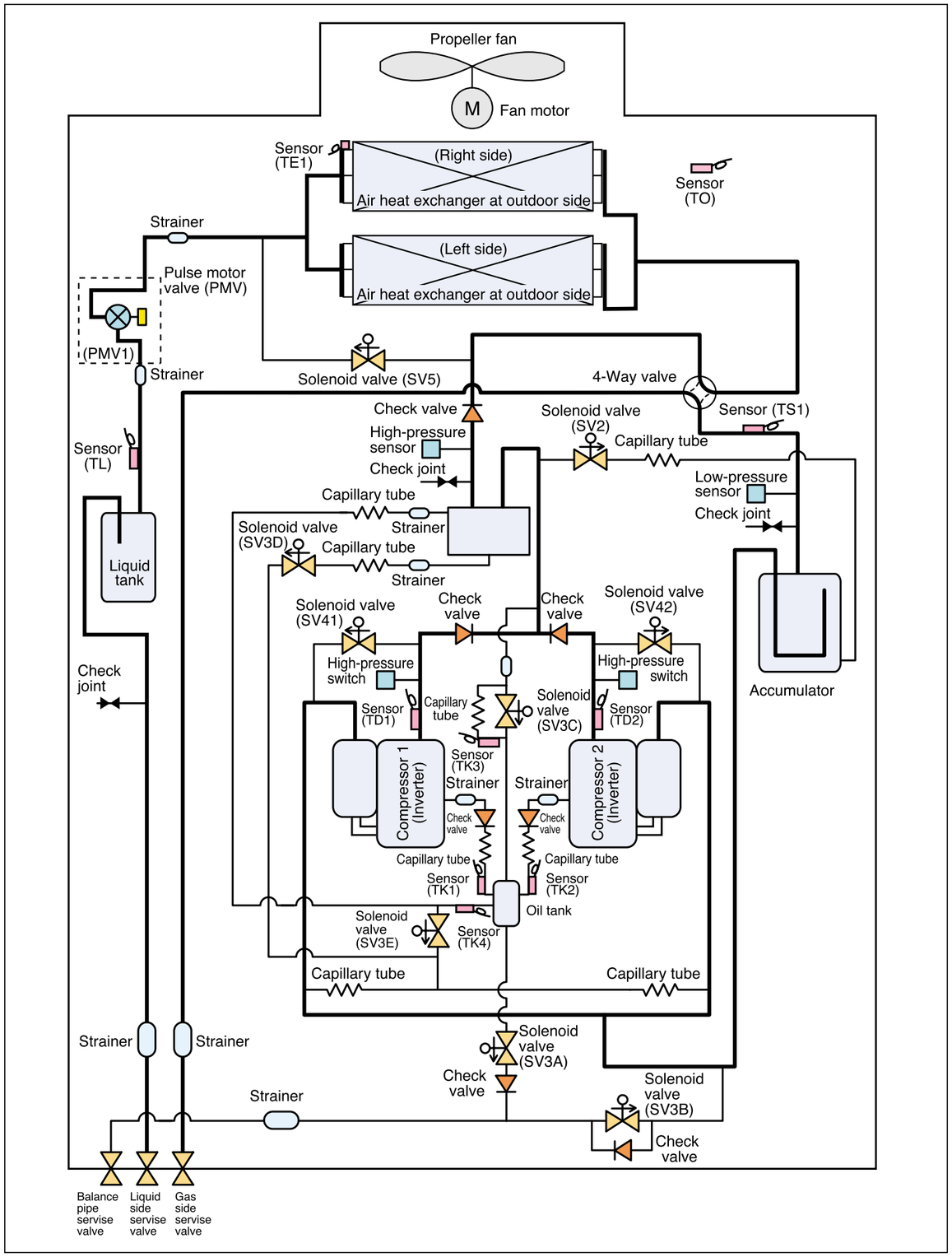

Inverter Unit 8, 10, 12HP Model: MMY-MAP0801HT, MAP1001HT, MAP1201HT

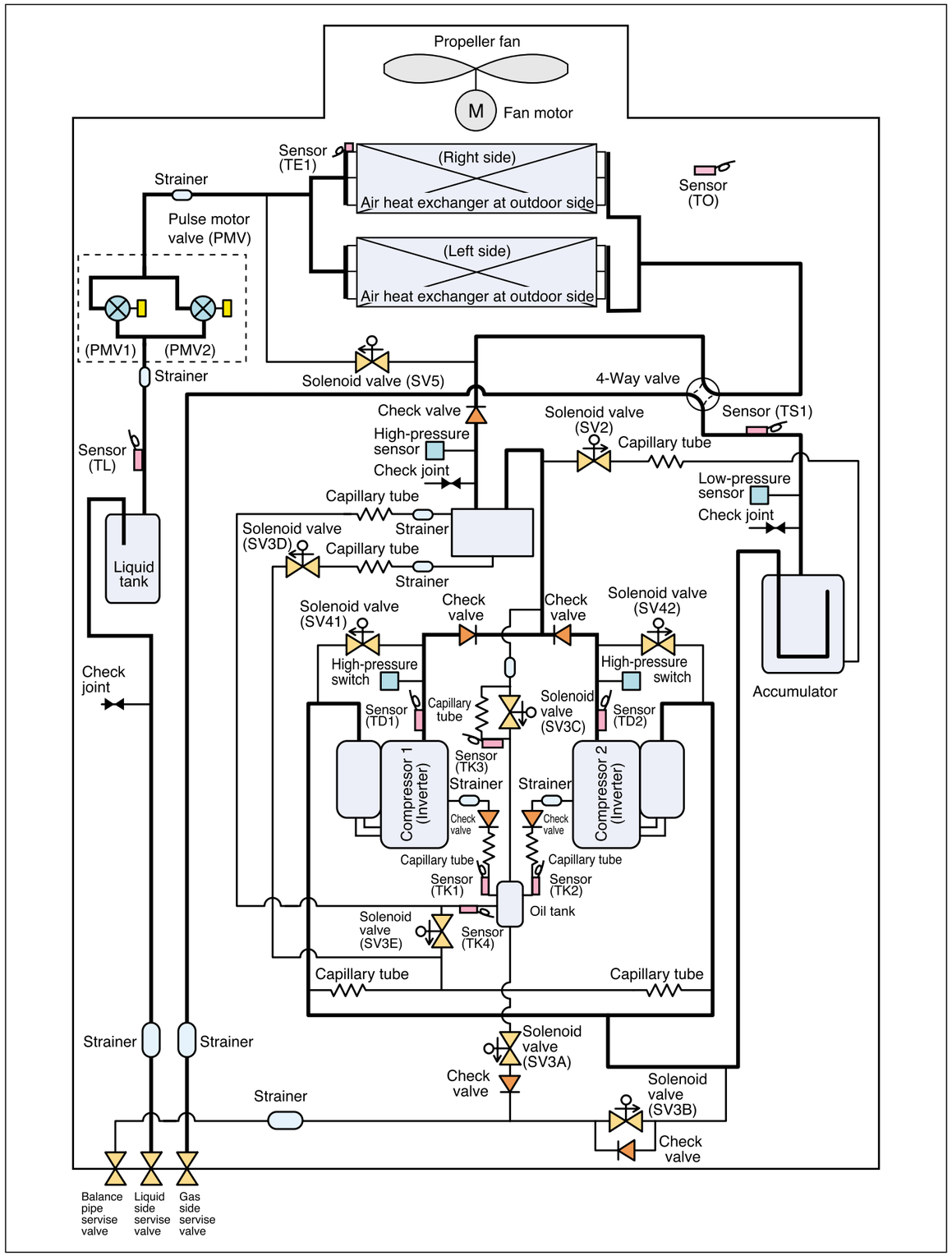

Explanation of Functional Parts

Functional part name		Functional outline
Solenoid valve	1.SV3A	(Connector CN324: Red) 1)Collects oil in the oil tank during OFF time. 2)Supplies oil reserved in the oil tank during ON time.
	2.SV3B	(Connector CN313: Blue) 1)Returns oil supplied in the balance pipe to the compressor.
	3.SV3C	(Connector CN314: Black) 1)Pressurizes oil reserved in the oil tank during ON time.
	4.SV3D	(Connector CN323: White) 1)Reserves oil in the oil separator during OFF time, and supplies oil during ON time.
	5.SV3E	(Connector CN323: White) 1)Turns on during operation and balances oil between compressors.
	6.SV2	(Hot gas bypass) (Connector CN312: White) 1)Low pressure release function 2)High pressure release function 3)Gas balance function during stop time
	7.SV4 (n)	(Start compensation valve of compressor) (Connector CN311: Blue) 1)For gas balance start 2)High pressure release function 3)Low pressure release function
	8.SV5	(Connector CN310: White) (for Heating model only) 1)Preventive function for high-pressure rising in heating operation
4-way valve		(Connector CN317: Blue) 1)Cooling/heating exchange 2)Reverse defrost
Pulse motor valve	PMV1, 2	(Connector CN300, 301: White) 1) Super heat control function in heating operation 2) Liquid line shut-down function while follower unit stops 3) Sub-cool adjustment function in cooling operation
Oil separator		1)Prevention for rapid decreasing of oil (Decreases oil flowing to the cycle) 2)Reserve function of surplus oil
Temp. sensor	1.TD1 TD2	(TD1: Connector, CN502: White, TD2: Connector, CN503: Pink) 1)Protection of compressor discharge temp. Used for release
	2.TS1	(Connector CN504: White) 1)Controls super heat in heating operation
	3.TE1	(Connector CN505: Green) 1)Controls defrost in heating operation 2)Controls outdoor fan in heating operation
	4.TK1, TK2, TK3, TK4	(TK1 Connector CN514: Black, TK2 Connector CN515: Green, TK3 Connector CN516: Red, TK4 Connector CN523: Yellow) 1)Judges oil level of the compressor
	5.TL	(Connector CN521: White) 1)Detects under cool in cooling operation
	6.TO	(Connector CN507: Yellow) 1)Detects outside temperature
Pressure sensor	1.High pressure sensor	(Connector CN501: Red) 1)Detects high pressure and controls compressor capacity 2)Detects high pressure in cooling operation, and controls the fan in low ambient cooling operation
	2. Low pressure sensor	(Connector CN500: White) 1)Detects low pressure in cooling operation and controls compressor capacity 2)Detects low pressure in heating operation, and controls the super heat
Heater	Compressor case heater	(Compressor 1 Connector CN316: White, Compressor 2 Connector CN315: Blue) 1)Prevents liquid accumulation to compressor
	Accumulator case heater	(Connector CN321: Red) 1) Prevents liquid accumulation to accumulator
Balance pipe		1) Oil balancing in each outdoor unit

Main remote controller display	Check code name
E01	Communication error between indoor and remote controller (Detected at remote controller side)
E02	Sending error of remote controller
E03	Communication error between indoor and remote controller (Detected at indoor side)
E04	Communication circuit error between indoor and outdoor (Detected at indoor side)
E06	Decrease of No. of indoor units
E07	Communication circuit error of indoor and outdoor (Detected at outdoor side)
E08	Duplicated indoor addresses
E09	Duplicated master remote controllers
E10	Communication error in indoor P.C. B ass'y
E12	Automatic address start error
E15	No indoor automatic address
E16	No. of connected indoor units / Capacity over
E18	Communication error between indoor header and follower units
E19	Outdoor header units quantity error
E20	Other line connected during automatic address
E23	Sending error in communication between outdoor units
E25	Duplicated follower outdoor addresses
E26	Decrease of No. of connected outdoor units
E28	Follower outdoor error
E31	IPDU communication error
F01	Indoor TCJ sensor error
F02	Indoor TC2 sensor error
F03	Indoor TC1 sensor error
F04	TD1 sensor error
F05	TD2 sensor error
F06	TE1 sensor error
F07	TL sensor error
F08	TO sensor error
F10	Indoor TA sensor error
F12	TS1 sensor error
F13	TH sensor error
F15	Outdoor temp sensor misconnecting (TE, TL)
F16	Outdoor pressure sensor misconnecting (Pd, Ps)
F23	Ps sensor error
F24	Pd sensor error
F29	Indoor other error
F31	Outdoor EEPROM error
H01	Compressor break down
H02	Magnet switch error Overcurrent relay operation Compressor error (lock)

Main remote controller display	Check code name
H03	Current detect circuit system error
H04	Comp 1 case thermo operation
H06	Low pressure protective operation
H07	Oil level down detective protection
H08	Oil level detective temp sensor error
H14	Comp 2 case thermo operation
H16	Oil level detective circuit error Magnet switch error Overcurrent relay operation
L03	Duplicated indoor header units
L04	Duplicated outdoor line addresses
L05	Duplicated indoor units with priority (Displayed on indoor unit with priority)
L06	Duplicated indoor units with priority (Displayed in unit other than indoor unit with priority)
L07	Group line in individual indoor unit
L08	Indoor group/Address unset
L09	Indoor capacity unset
L10	Outdoor capacity unset
L20	Duplicated central control addresses
L28	Over No. of connected outdoor units
L29	No. of IPDU error
L30	Auxiliary interlock in indoor unit
L31	IC errorIndoor TCJ sensor error
P01	Indoor fan motor error
P03	Discharge temp TD1 error
P04	High-pressure SW detection error
P05	Phase-missing detection / Phase order error
P07	Heat sink overheat error
P10	Indoor overflow error
P12	Indoor fan motor error
P13	Outdoor liquid back detection error
P15	Gas leak detection
P17	Discharge temp TD2 error
P19	4-way valve inverse error
P20	High-pressure protective operation
P22	Outdoor fan IPDU error
P26	G-TR short protection error
P29	Comp position detective circuit system error
P31	Other indoor unit error (Group follower unit error)
–	Error in indoor group
–	AI-NET communication system error
–	Duplicated network adaptors

Pre-check for Address Setup

<Check on outdoor unit>

1. Check that all the rotary switches, SW01, SW02, and SW03 on the interface P.C. board of the header unit are set up to “1”.
2. If other error code is displayed on 7-segment [B], remove the cause of trouble referring to “9. Troubleshooting”.
3. Check that [L08] is displayed on 7-segment display [B] on the interface P.C. board of the header unit.(L08: Indoor address unset up)
   (If the address setup operation has already finished in service time, etc, the above check code is not displayed, and only [U1] is displayed on 7-segment display [A].)

<Check on indoor unit>

1. Display check on remote controller (In case of wired remote controller)
   Check that a frame as shown in the following left figure is displayed on LC display section of the remote controller.

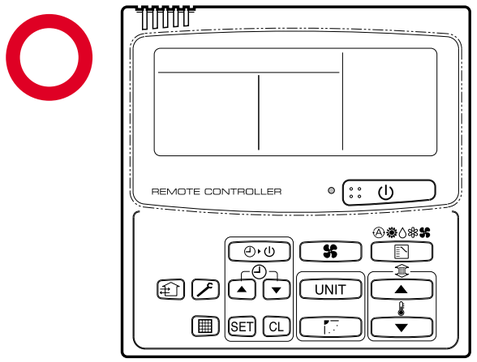

Normal status
(Power and operation stop)

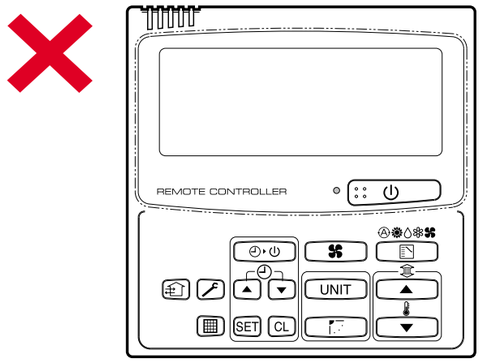

Abnormal status
(Power is not normally turned on.)

If a frame is not displayed as shown in the above right figure, the power of the remote controller is not normally turned on. Therefore check the following items.

- Check power supply of indoor unit.
- Check cabling between indoor unit and remote controller.
- Check whether there is cutoff of cable around the indoor control P.C. board or not, and check connection failure of connectors.
- Check failure of transformer for the indoor microcomputer.
- Check indoor control P.C. board failure.

Automatic Address Setup

Address setup procedure 1

1. Turn on power of indoor/outdoor units.
2. (In order of indoor → Outdoor)
   After approx. 1 minute, check that U. 1. L08 (U. 1. flash) is displayed in 7-segment display section on the interface P.C. board of the header unit.
3. Push SW15 and start setup the automatic address.
   (Max. 10 minutes for 1 line (Usually, approx. 5 minutes))
4. When the count Auto 1 → Auto 2 → Auto 3 is displayed in 7-segment display section, and it changes from U. 1. - - - (U. 1. flash) to U. 1. - - - (U. 1. light) , the setup finished.

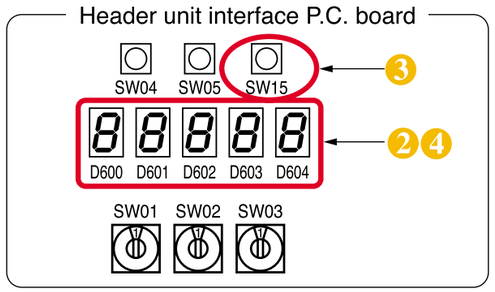

5. When perform a central control, connect a relay connector between [U1, U2] and [U3, U4] terminals in the header unit.

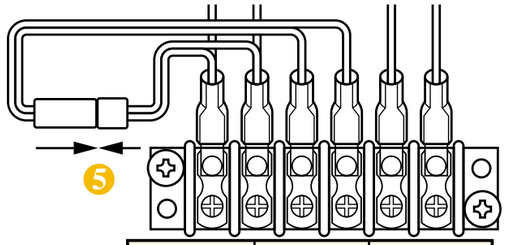

U1 U2	U3 U4	U5 U6
For internal wiring between indoor and outdoor	For wiring of central control system	For internal wiring between outdoor units

Address setup procedure 2

1. Using SW13 and 14 on the interface P.C. board of the header unit in each system, set up the refrigerant line address for each system.
   (At shipment from factory: Set to Address 1)

   Note) Do not to duplicate with other refrigerant line.
   Max. system address is up to 28

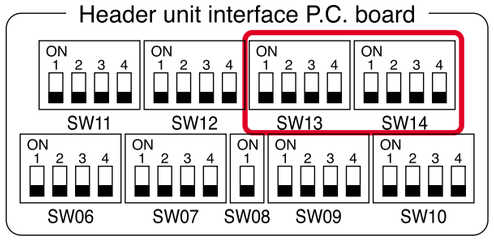

System address switch on outdoor interface P.C. board (O : Switch ON, X : Switch OFF)

	SW13				SW14			
	1	2	3	4	1	2	3	4
1				X	X	X	X	X
2				X	O	X	X	X
3				X	X	O	X	X
4				X	O	O	X	X
5				X	X	X	O	X
6				X	O	X	O	X
7				X	X	O	O	X
8				X	O	O	O	X
9				X	X	X	X	O
10				X	O	X	X	O
11				X	X	O	X	O
12				X	O	O	X	O
13				X	X	X	O	O
14				X	O	X	O	O

	SW13				SW14			
				4	1	2	3	4
15				X	X	O	O	O
16				X	O	O	O	O
17				O	X	X	X	X
18				O	O	X	X	X
19				O	X	O	X	X
20				O	O	O	X	X
21				O	X	X	O	X
22				O	O	X	O	X
23				O	X	O	O	X
24				O	O	O	O	X
25				O	X	X	X	O
26				O	O	X	X	O
27				O	X	O	X	O
28				O	O	O	X	O

: Is not used for setup of system address. (Do not change setup.)

2. Check that the relay connectors between [U1U2] and [U3U4] terminals are come out in all the header units to which the central control is connected.
(At shipment from factory: No connection of connector)
3. Turn on power of indoor/outdoor.
(In order of indoor → outdoor)
4. After approx. 1 minute, check that 7-segment display is U.1.L08 (U.1. flash) on the interface P.C. board of the header unit.
5. Push SW15 and start setup the automatic address.
6. (Max. 10 minutes for 1 line (Usually, approx. 5 minutes))
When the count Auto 1 → Auto 2 → Auto 3 is displayed in 7-segment display section, and it changes from U. 1. - - - (U. 1. flash) to U. 1. - - - (U. 1. light), the setup finished.
7. Procedure 4. to 6. are repeated in other refrigerant lines.
8. How to set up resistance of the end terminal When all the address setups have finished in the same refrigerant circuit system, put the resistance of the end terminals in the same central control line into one.
   - Remain only SW03-2 of the header outdoor unit with the least circuit system address number as it is ON.
   (With end terminal resistance)
   - Set up SW03-2 of the other header outdoor units to OFF.
   (Without end terminal resistance)
9. Connect the relay connector between [U1U2] and [U3U4] of the header unit for each refrigerant line.
10. Then set up the central control address.
(For the central control address setup, refer to the Installation manual of the central control devices.)

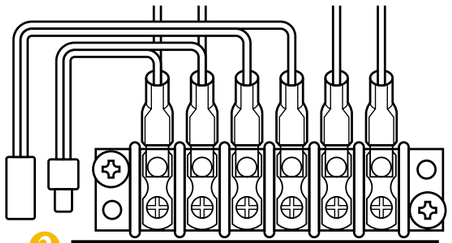

U1 U2	U3 U4	U5 U6
For internal wiring between indoor and outdoor	For wiring of central control system	For internal wiring between outdoor units

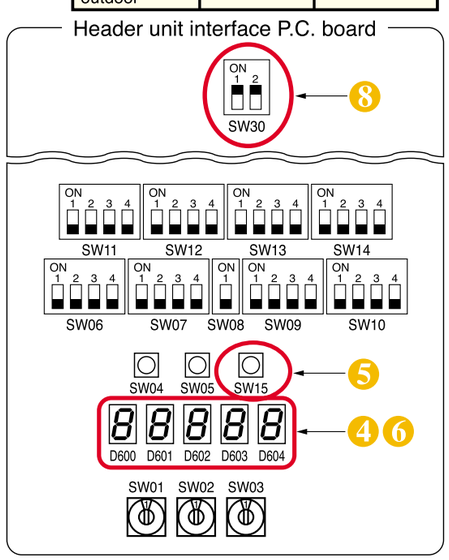

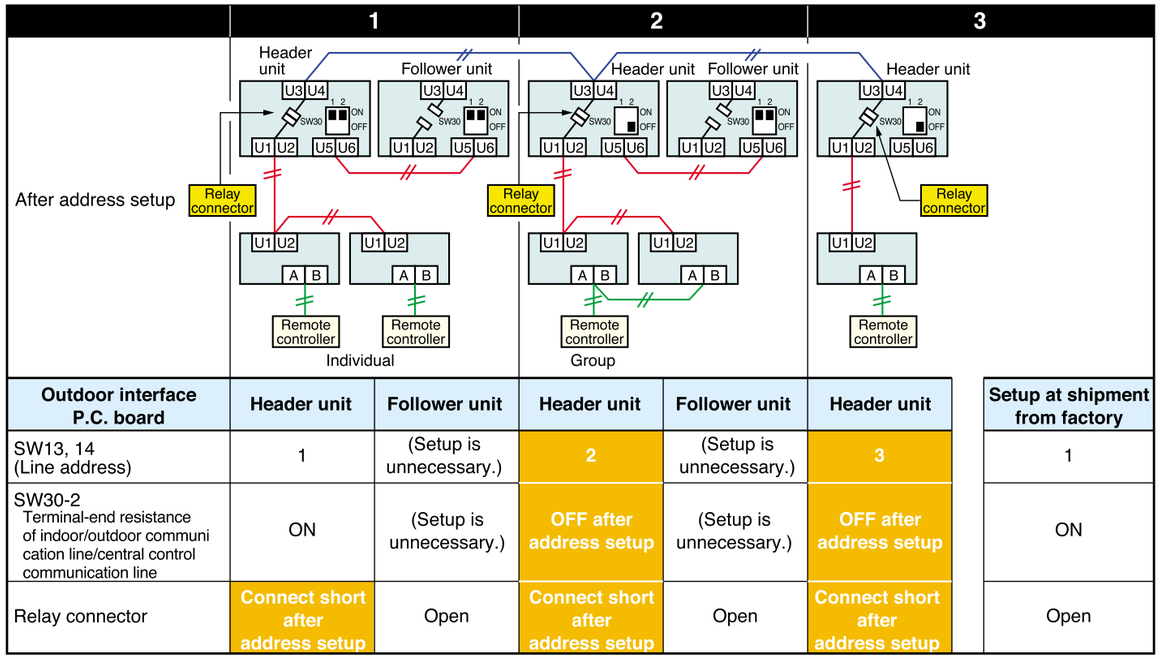

Outdoor interface P.C. board	Header unit	Follower unit	Header unit	Follower unit	Header unit	Setup at shipment from factory
SW13, 14 (Line address)	1	(Setup is unnecessary.)	2	(Setup is unnecessary.)	3	1
SW30-2 Terminal-end resistance of indoor/outdoor communication line/central control communication line	ON	(Setup is unnecessary.)	OFF after address setup	(Setup is unnecessary.)	OFF after address setup	ON
Relay connector	Connect short after address setup	Open	Connect short after address setup	Open	Connect short after address setup	Open

Indoor side (Automatic setup)

Line address	1	1	2	2	3
Indoor unit address	1	2	1	2	1
Group address	0	0	1	2	0

Point

Relay connector — NOTE —

Never connect a relay connector until address setup for all the refrigerant lines finishes; otherwise address cannot be correctly set up.

Manual address setup from remote controller

In case to decide an address of the indoor unit prior to finish of indoor cabling work and unpracticed outdoor cabling work (Manual setup from remote controller)

Arrange one indoor unit and one remote controller set to 1 by 1.

Turn on the power.

Line address

1. **Push simultaneously SET + CL + 🔧 buttons for 4 seconds or more.**
   LCD changes to flashing.
   (Line address)
2. **Using the setup temp. ▲ / ▼ buttons, set 12 to the item code.**
3. **Using the timer time ▲ / ▼ buttons, set up the line address.**
   (Match it with the line address on the interface P.C. board of the header unit in the identical refrigerant line.)

Indoor address

4. **Push SET button.**
   (OK when display goes on.)
   (Indoor address)
5. **Using the setup temp. ▲ / ▼ buttons, set 13 to the item code.**
6. **Using the timer time ▲ / ▼ buttons, set up the indoor address.**

Group address

7. **Push SET button.**
   (OK when display goes on.)
   (Group address)
8. **Using the setup temp. ▲ / ▼ buttons, set 14 to the item code.**
9. **Using the timer time ▲ / ▼ buttons, set Individual = 0000, Header unit = 0001, Follower unit = 0002.**
10. **Push SET button.**
    (OK when display goes on.)
11. **Push 🔧 button.**
    Setup operation finished.
    (Status returns to normal stop status.)

Operation procedure

1 → 2 → 3 → 4 →
5 → 6 → 7 → 8 →
9 → 10 → 11 end

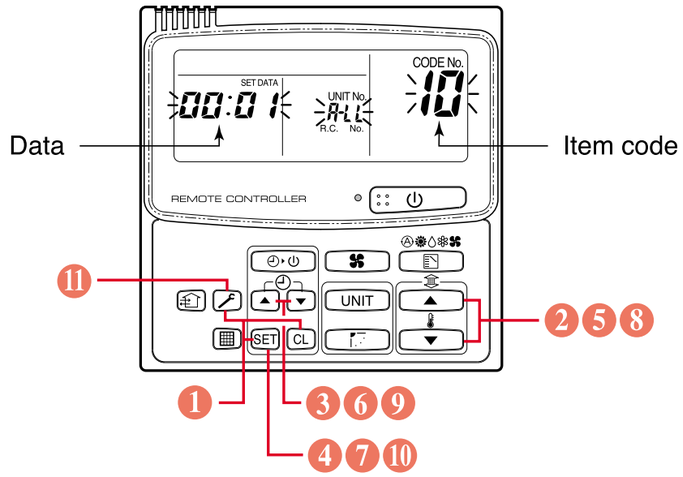

Wiring example in 2 lines

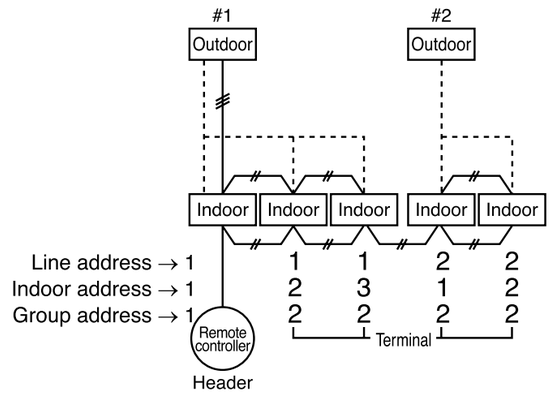

In the above example, under condition of no inter-unit wire of the remote controller, set the address after individual connecting of the wired remote controller.

Group address

Individual	: 0000	
Center unit	: 0001	} In case of group control
Terminal unit	: 0002	

Note 1)
When setting the line address from the remote controller, do not use address 29 and 30.
The address 29 and 30 cannot be set up in the outdoor unit. Therefore if they are incorrectly set up, a check
code [E04] (Indoor/outdoor communication circuit error) is output.

Clearance of Indoor's Address

Clearance of address (Return to status (Address undecided) at shipment from factory)

Method 1 An address is individually cleared from a wired remote controller.

Item code	line addoress	indoor address	group address	central address
	12	13	14	03

→ **<0099>**

Method 2 Clear the indoor addresses in the same refrigerant line from the outdoor unit.

Point

Turn off the power of the refrigerant line to be returned to the status at shipment, and change the header unit to the following status.

1) Remove the relay connector between [U1U2] and [U3U4].(If it has been already removed, leave it as it is.)
2) Turn on SW30-2 on the interface P.C. board of the header unit if it is OFF.(If it has been already ON, leave it as it is.)

Relay connector

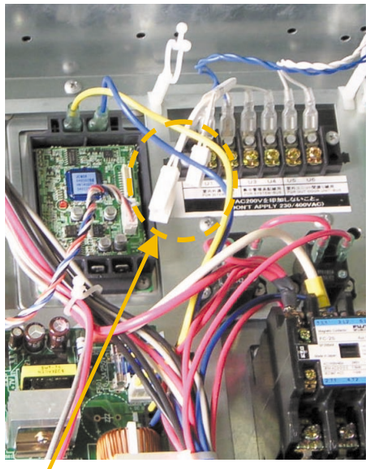

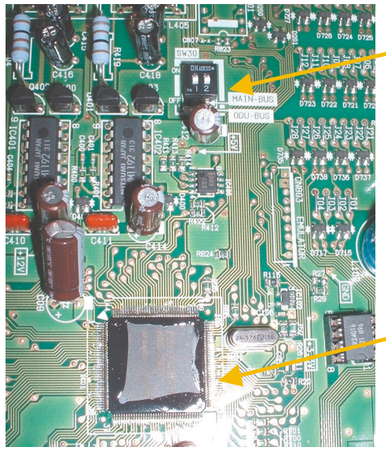

SW30
left : SW30-1
right : SW30-2

MCU

Relay connector

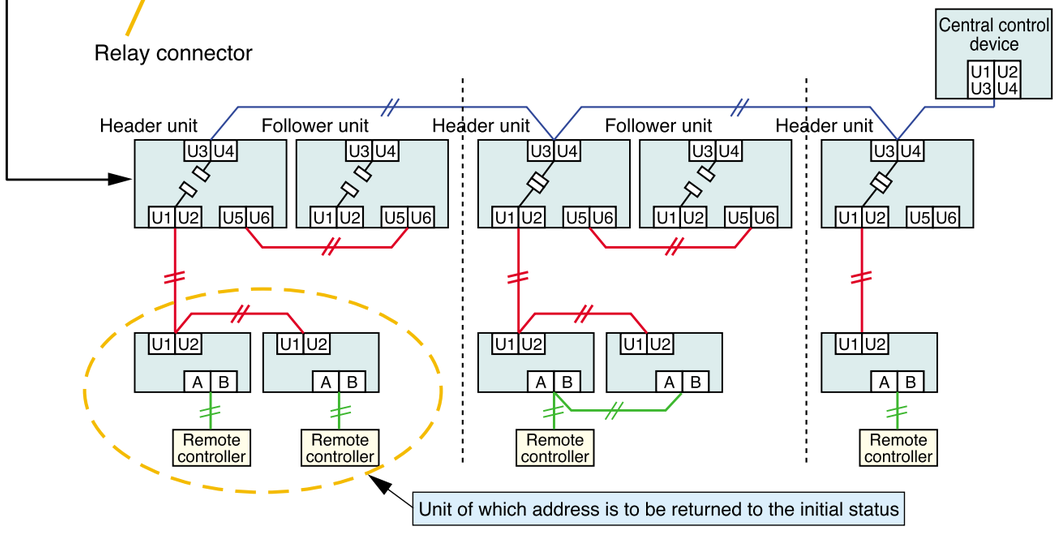

address Clear

Turn on the indoor/outdoor power of which address is to be cleared. After approx. 1 minute, check that "U.1. - - -" is displayed, and then execute the following operation on the interface P.C. board of the header unit of which address is to be cleared in the refrigerant line.

SW01	SW02	SW03	SW04	Address which can be cleared
2	1	2	After checking that "A.d.buS" is displayed on 7-degment display, and then push SW04 for 5 seconds or more.	Line + Indoor + Group address
2	2	2	After checking that "A.d.nEt" is displayed on 7-degment display, and then push SW04 for 5 seconds or more.	Central address

1. After "A.d. c.L." has been displayed on 7-degment display, return SW01/SW02/SW03 to 1/1/1.
2. When the address clearing has correctly finished, "U.1.L08" is displayed on 7-degment display after a while. If "A.d. n.G." is displayed on 7-degment display, there is a possibility which is connected with the other refrigerant line. Check again the relay connector between [U1U2] and [U3U4] terminals.

   NOTE) Be careful that the other refrigerant line address may be also cleared if clearing operation is not correctly executed.

3. After clearing of the address, set up an address again.

1 A check Code is Displayed on the Remote Controller

Check code displayed on remote controller	Center unit 7-segment display	Cause	Countermeasures
E04	E19-00	Outdoor power is formerly turned on.	Turn on the power again. (In order of Indoor → Outdoor)
		There is none of outdoor terminal resistance, or there are two or more resistances. (After address setup)	Check SW30 bit 2 of the header unit. No connection between multiple refrigerant lines: SW30 bit 20N Connection between multiple refrigerant lines: SW30 bit 2 of the connected header unit is turned on only in one line.
		After address was decided, all the indoor units do not correctly response after power-ON in outdoor unit. 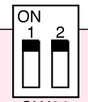	Check and modifies disconnection of indoor/outdoor communication line.(Communication line between center unit and the leading indoor unit) Check influence of communication noise.
	L08	Address setup error • Only line addresses of the connected indoor units are undefined. • The outdoor line address and the line addresses in all indoor units do not match. • The indoor addresses are duplicated. (Units except those displaying E04 are duplicated.) • A header unit is not set up in a group. (Except group displaying E04)	Set up address again.
	E08-XX	Duplication of indoor addresses. (Address No in which sub-code of the check code are duplicated)	Set up address again.
	E07	There is none of outdoor terminal resistance, or there are two or more resistances. (After address setup, when terminal resistance setup is changed after power-ON.) 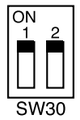	Check SW30 bit 2 of the header unit. No connection between multiple refrigerant lines: SW30 bit 20N Connection between multiple refrigerant lines: SW30 bit 2 of the connected header unit is turned on only in one line.
		Transmission circuit error at interface side (P.C. board failure)	Replace the interface P.C. board.
	E06	After address setup, communication from all the indoor units interrupted under condition that a normal operation can be performed.	Check and correct disconnection of indoor/outdoor communication line.(Communication line between header unit and the leading indoor unit) Check influence of communication noise.
E16	E16-XX	Exceeded No of connected indoor units or exceeded capacity.	Adjust No of connected indoor units or capacity.
E25	E25	Duplication of outdoor addresses. (Only when outdoor address was manually set up)	Do not use a manual setup for outdoor address.
E26	E26-XX	No. of connected outdoor units decreased. • When setting outdoor backup • The power of follower unit is not turned on.	Correct of cause of error occurrence • If it occurred when setting backup, clear the error after setup finish. • If the power of follower unit is not turned on, turn on the power.
L04	L04	Duplication of outdoor line addresses • Line address setup error, occurred after connection between U1, U2 and U3, U4 connectors	Modify line address setup of the header unit between lines. (Set up SW 13 and 14 on the interface P.C. board.)
L05 (*)	L06	Duplicated of indoor units with priority	Set up priority to only one indoor unit.
L06		There are two or more indoor units set up with priority.	
L08	L08	Address setup error • Only indoor addresses of all the connected indoor units are undefined.	Set up address again.

(*) [L05]: Displayed on the indoor unit set up with priority
[L06]: Displayed on the indoor unit except one set up with priority

2 Operation from remote controller is not accepted and a check code is displayed on 7-segment display of the interface P.C. board of the header unit.

Remote controller status	7-segment display of center unit	Cause	Countermeasures
No response	L08	Line addresses and indoor addresses of all the connected indoor units are unset.	Set up addresses.
		There is no header unit of group control.	Set up group address.
	E19-00	Indoor unit power is not turned on.	Turn on the power again. (In order of indoor → outdoor)
		Indoor/outdoor communication line is not correctly connected to the header unit. (Fig. 1) (Indoor/outdoor cannot communicate before address setup.)	Correct cabling.
		There is none of outdoor terminal resistance, or there are two or more resistances. (Before address setup)	Check SW30 bit 2 of the header unit. No connection between multiple refrigerant lines: SW30 bit 2 0N Connection between multiple refrigerant lines: SW30 bit 2 of the connected header unit is turned on only in one line.
	E19-02	When connecting indoor/outdoor communication line between outdoor units under condition of connected communication line between outdoor units (Fig. 2)	Correct cabling.
		SW08 setup error	Turn all SW08 to OFF side.
	E20-01	Address setup is performed with connecting indoor/outdoor communication line between outdoor units. (Fig. 3)	Correct cabling.
		Address setup is performed under condition of connecting between multiple refrigerant lines. (Fig. 3)	Correct cabling.

3 There is no display of a check code on 7-segment display on the interface P.C. board of the header unit though there is indoor unit which does not accept the operation from the remote controller.

Remote controller status	7-segment display of center unit	Cause	Countermeasures
No response	None	Communication line is not connected between indoor and outdoor.	Modify cabling.
		Line and indoor addresses are unset. (Unit which does not response to remote controller)	Set up address.
		The power of the header unit of the group is not turned on in indoor group control.(Unit which does not response to remote controller)	Turn on the power.
		Group address is set up to follower unit in the individual control. (Unit which does not response to remote controller)	Set [0] to group address in case of individual control.
No display on remote controller (No line is output.)	None	The power is not turned on. (Unit which is not displayed on remote controller)	Turn on the power.
		Remote controller is not connected with cable. (Unit which is not displayed on remote controller)	Correct cabling.
		Miscabling of remote controller (Unit which is not displayed on remote controller)	Correct cabling.
		Remote controller communication circuit error (Unit which is not displayed on remote controller) If 230V is incorrectly applied to the remote controller terminal, the remote controller communication circuit fails.	Remove FASTON terminal connected to remote controller terminals (A/B), and check the voltage. If voltage is not applied, replace P.C. board. (15 to 18V usually)

4 In check for No. of connected outdoor units and connected Indoor units after address setup, diminished No. of connected units displayed. (There are outdoor/indoor units which do not operate in a test operation.)

Status	Cause	Countermeasures
Number of connected outdoor units is short.	Miswiring of communication line between outdoor units or unconnected cable (Fig. 4) (Address setup operation has finished without recognition of miswired follower unit.)	After modification of wiring, set up address again and check No. of the connected outdoor units.
Number of connected indoor units is short.	Miswiring of communication line between indoor units or unconnected cable (Fig. 5) (Address setup operation has finished without recognition of miswired indoor unit.)	After modification of wiring, set up address again and check No. of the connected indoor units.
Number of outdoor units connected to group is short in group operation from remote controller.	Remote controller is not connected with cable. Miscabling of remote controller	Using the main remote controller connected to a group, start a test operation, specify the unit which does not operate (Unit unconnected to group), and then check cabling.
	Remote controller communication circuit error If 230V is incorrectly applied to the remote controller terminal, the remote controller communication circuit fails.	Using the main remote controller connected to a group, start a test operation, specify the unit which does not operate (Unit unconnected to group). Remove Fasten receptacle connected to remote controller terminals (A/B), and check the voltage If voltage is not applied, replace P.C. board. (15 to18V in normal time).

When using a remote controller with the model name RBC-ATM21E, the following monitor functions can be used.

Push CL + buttons simultaneously for 4 seconds or more to call up the service monitor mode.
Pushing button returns the display to the normal display.

	Item code	Data name	Unit	Display format
Indoor unit data (NOTE 2)	00	Room temp (During control)	°C	
	01	Room temp (Remote controller)	°C	
	02	Indoor suction temp (TA)	°C	X 1
	03	Indoor coil temp (TCJ)	°C	X 1
	04	Indoor coil temp (TC2)	°C	X 1
	05	Indoor coil temp (TC1)	°C	X 1
	06	Indoor discharge temp (Tf) (NOTE 1)	°C	X 1
	08	Indoor PMV opening	pulse	X 1/10
System data	0A	No. of connected indoor units	unit	
	0b	Total HP of connected indoor units	HP	X 10
	0C	No. of connected outdoor units	unit	
	0d	Total HP of indoor units	HP	X 10

	Item code	Data name	Unit	Display format
Outdoor unit individual data (NOTE 4, 5)	10	Compressor 1 discharge temp (Td1)	°C	X 1
	11	Compressor 2 discharge temp (Td2)	°C	X 1
	12	High-pressure sensor detention pressure (Pd)	MPa	X 100
	13	Low-pressure sensor detention pressure (Ps)	MPa	X 100
	14	Suction temp (TS)	°C	X 1
	15	Outdoor heat exchanger temp (TE)	°C	X 1
	16	Temp at liquid side (TL)	°C	X 1
	17	Outside ambient temp (TO)	°C	X 1
	18	Low-pressure saturation temp (TU)	°C	X 1
	19	Compressor 1 current (I1)	A	X 10
	1A	Compressor 2 current (I2)	A	X 10
	1b	PMV1 + 2 opening	pulse	X 1/10
	1d	Compressor 1, 2 ON/OFF	—	(NOTE 3)
	1E	Outdoor fan mode	—	0 to 31
	1F	Outdoor unit HP	HP	X 1

(NOTE 1) Only a part of indoor unit types is installed with the discharge temperature sensor.This temperature is not displayed for other types.
(NOTE 2) When the units are connected to a group, data of the header indoor unit only can be displayed.
(NOTE 3) 01 : Compressor 1 only is ON.
10 : Compressor 2 only is ON.
11 : Both compressor 1 and 2 are ON.
(NOTE 4) For item code, an example of the header unit is described.
(NOTE 5) The upper digit of the item code indicates the outdoor unit No.
1 : Header unit (A)
2 : Follower unit (B)
3 : Follower unit (C)
4 : Follower unit (D)

Confirmation of indoor unit address and position by using the remote controller

Confirmation of indoor unit address and the position

When you want to know the indoor address though position of the indoor unit itself can be recognized;

Procedure (Operation while the air conditioner operates)

1. **If it stops, push button.**
2. **Push UNIT UNIT button.**

The unit NO 1-1 is displayed on the LCD. (Disappears after several seconds) The displayed unit No indicates the line address and indoor address. (If there is other indoor unit connected to the same remote controller (Group control unit), other unit No is displayed every pushing UNIT UNIT button.)

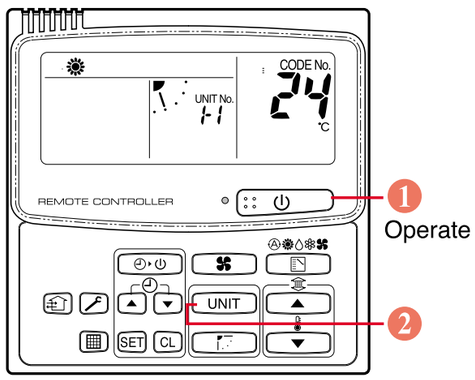

Operation procedure
1 → 2

When you want to know position of the indoor unit using the address

• To confirm the unit numbers in a group control;

Procedure (Operation while the air conditioner stops)

The indoor unit numbers in a group control are successively displayed, and the corresponding indoor fan is turned on. (Operation while the air conditioner stops)

1. **Push + buttons simultaneously for 4 seconds or more.**
   • Unit No ALL is displayed.
   • The fans of all the indoor units in a group control are turned on.
2. **Every pushing UNIT button, the indoor unit numbers in the group control are successively displayed.**
   • The firstly displayed unit No indicates the address of the header unit.
   • Only fan of the selected indoor unit is turned on.
3. **Push button to finish the procedure.**
   All the indoor units in group control stop.

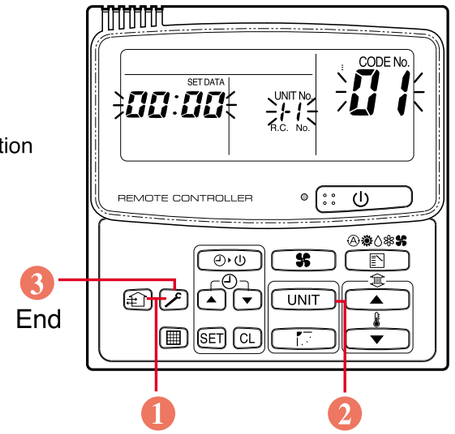

Operation procedure
1 → 2 → 3 End

• To confirm all the unit numbers from an arbitrary wired remote controller;

Procedure (Operation while the air conditioner stops)

The indoor unit No and position in the same refrigerant piping can be confirmed. An outdoor unit is selected, the indoor unit numbers in the same refrigerant piping are successively displayed, and then its indoor unit fan is turned on.

1. **Push the timer time + buttons simultaneously for 4 seconds or more.**
   Firstly, the line 1, item code AC (Address Change) is displayed. (Select outdoor unit.)
2. **Using UNIT + buttons, select the line address.**
3. **Using SET button, determine the selected line address.**
   • The indoor unit address, which is connected to the refrigerant pipe of the selected outdoor unit is displayed and the fan is turned on.
4. **Every pushing UNIT button, the indoor unit numbers in the identical pipe are successively displayed.**
   • Only fan of the selected indoor unit operates.played and the fan is turned on.

[To select another line address]

5. **Push CL button to return to procedure 2).**
   • The indoor address of another line can be succes- sively confirmed.
6. **Push button to finish the procedure.**

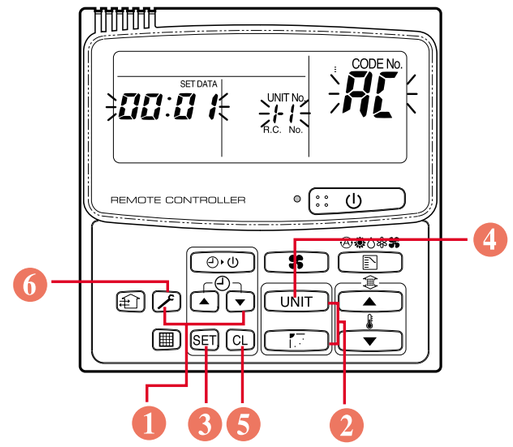

Operation procedure
1 → 2 → 3 → 4 → 5 → 6 End

Change of indoor address from remote controller

Change of indoor address from wired remote controller

- **To change the indoor address in individual operation (Wired remote controller : Indoor unit = 1 : 1) or group control**
  (When the setup operation with automatic address has finished, this change is available.)

Procedure (Operation while the air conditioner stops)

1. **Push simultaneously SET + CL + buttons for 4 seconds or more.**
   (The firstly displayed unit No indicates the header unit in group control.)
2. **In group control, select an indoor unit No to be changed by UNIT button.**
   (The fan of the selected indoor unit is turned on.)
3. **Using the setup temp. ▲ / ▼ buttons, set 13 to the item code.**
4. **Using the timer time ▲ / ▼ buttons, change the displayed setup data to a data which you want to change.**
5. **Push SET button.**
6. **Using the UNIT button, select the unit No. to be changed at the next time. Repeat the procedure 4 to 6 and change the indoor address so that it is not duplicated.**
7. **After the above change, push UNIT button to confirm the changed contents.**
8. **If it is acceptable, push button to finish confirmation.**

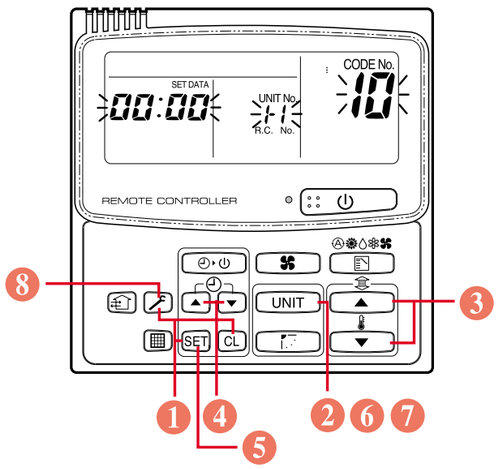

Operation procedure

1 → 2 → 3 → 4 → 5 → → 6 → 7 → 8 **End**

- **To change all the indoor addresses from an arbitrary wired remote controller;** (When the setup operation with automatic address has finished, this change is available.)

Contents : Using an arbitrary wired remote controller, the indoor unit address can be changed for each same refrigerant piping line

Change the address in the address check/change mode.

Procedure (Operation while the air conditioner stops)

1. **Push the timer time ▼ + buttons simultaneously for 4 seconds or more.**
   Firstly, the line 1, item code AC (Address Change) is displayed.
2. **Using UNIT + buttons, select the line address.**

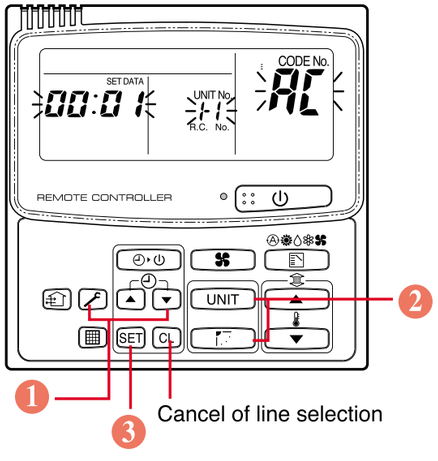

Here, if the unit No is not called up, the outdoor unit in this line does not exist.
Push CL button, and then select a line according to procedure 2 .

3. **Push SET button.**
   - The indoor unit address, which is connected to the refrigerant pipe of the selected outdoor unit is displayed and the fan is turned on.
     First the current indoor address is displayed on the setup data.
     (Line address is not displayed.)
4. **The indoor address of the setup data moves up/down by the timer time ▲ / ▼ buttons.**
   Change the setup data to a new address.
5. **Push SET button to determine the setup data.**
6. **Every pushing UNIT button, the indoor unit numbers in the identical pipe are successively displayed. Only fan of the selected indoor unit operates.**
   Repeat the procedure 4 to 6 and change all the indoor addresses so that they are not duplicated.
7. **Push SET button.**
   (All the displays on LCD go on.)
8. **Push button to finish the procedure.**

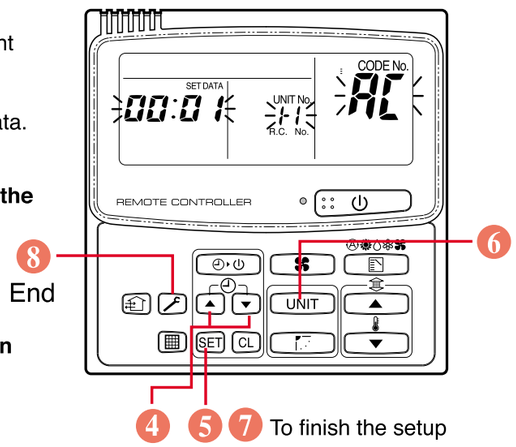

Operation procedure

1 → 2 → 3 → 4 → 5 → → 6 → 7 → 8 **End**

Error Clearing Function

Clearing from the main remote controller

[Error clearing in outdoor unit]

Error of the outdoor unit is cleared by the unit of one refrigerant circuit system to which the indoor units operated by the remote controller. (Error of the indoor unit is not cleared.)
For clearing errors, the service monitor function of the remote controller is used.

Method

1. **Change the mode to service monitor mode by pushing CL + buttons simultaneously for 4 seconds or more.**
2. **Using ▲ / ▼ buttons, set " FF " to item code.**
   The display in Section A in the following figure is counted with interval of 5 seconds as
   "0005" → "0004" → "0003" → "0002" → "0001" → "0000"
   When the count arrives "0000", the error is cleared.
   *However, counting from "0005" is repeated on the display.
3. **When button is pushed, the status returns to the normal status.**

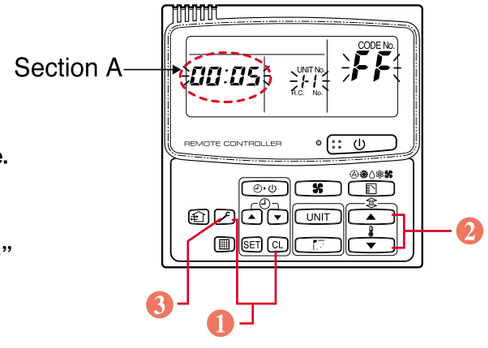

Operation procedure

1 → 2 → 3

The status returns to the normal status.

[Error clearing in indoor unit]

Error in the indoor unit is cleared by button on the remote controller.
(Only error of the indoor unit connected with operating remote controller is cleared.)

Applied control

Procedure Execute the setup operation while the unit stops.

1. **Push SET, CL, and buttons simultaneously for 4 seconds or more.**
   The firstly displayed unit No. indicates the header indoor unit address in the group control.
   In this time, the fan of the selected indoor unit is turned on.
2. **Every pushing UNIT button, the indoor unit numbers in the group control are successively displayed. In this time, the fan of the selected indoor unit only is turned on.**
3. **Specify the item code (DN) using the setup temperature ▲ and ▼ buttons.**
4. **Select the setup data using the timer time ▲ and ▼ buttons.**
   (When selecting the DN code to "33", change the temperature indication of the unit from "°C" to "°F" on the remote controller.)
5. **Push SET button. (OK if display goes on.)**
   - To change the selected indoor unit, return to procedure 2.
   - To change the item to be set up, return to procedure 3.
6. **Pushing button returns the status to normal stop status.**

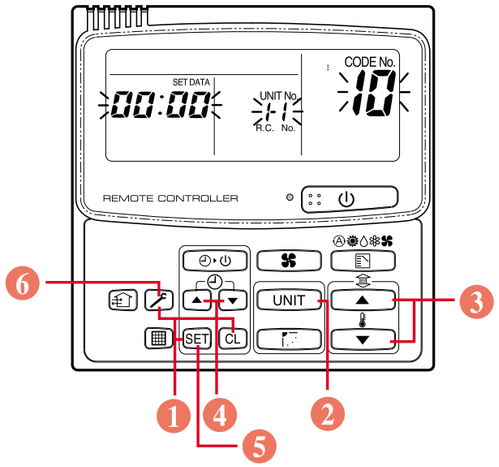

TYPE
Item code [10]

Setup data	Type	Abbreviated Model name
0000	1-way Air Discharge Cassette	MMU-AP XXX SH
0001	4-way Air Discharge Cassette	MMU-AP XXX H
0002	2-way Air Discharge Cassette	MMU-AP XXX WH
0003	1-way Air Discharge Cassette (Compact type)	MMU-AP XXX YH
0004	Concealed Duct Standard	MMD-AP XXX BH
0006	Concealed Duct High Static Pressure	MMD-AP XXX H
0007	Under Ceiling	MMC-AP XXX H
0008	High Wall	MMK-AP XXX H
0010	Floor Standing Cabinet	MML-AP XXX H
0011	Floor Standing Concealed	MML-AP XXX BH
0013	Floor Standing	MMF-AP XXX H
~	–	

Indoor unit capacity
Item code [11]

Setup data	Model
0001	007
0003	009
0005	012
0007	015
0009	018
0011	024
0012	027
0013	030
0015	036
0017	048
0018	056
0021	072
0023	096
~	–

Table: Function selecting item numbers (DN)
(Items necessary to perform the applied control at the local site are described.)

DN	Item	Description	At shipment
01	Filter sign lighting time	0000 : None 0001 : 150H 0002 : 2500H 0003 : 5000H 0004 : 10000H	According to type
02	Dirty state of filter	0000 : Standard 0001 : High degree of dirt (Half of standard time)	0000 : Standard
03	Central control address	0001 : No.1 unit to 0064 : No.64 unit 0099 : Unfixed	0099 : Unfixed
04	Specific indoor unit priority	0000 : No priority 0001 : Priority	0000 : No priority
06	Heating temp shift	0000 : No shift 0001 : +1°C 0002 : +2°C to 0010 : +10°C (Up to +6 recommended)	0002 : +2°C (Floor type 0000: 0°C)
0d	Existence of automatic cool/heat mode	0000 : Provided 0001 : Not provided (Automatic selection from connected outdoor unit)	0001 : Not provided
0F	Cooling only	0000 : Heat pump 0001 : Cooling only (No display of [AUTO] [HEAT])	0000 : Heat pump
10	Type	0000 : (1-way air discharge cassette) 0001 : (4-way air discharge cassette) to 0037	According to model type
11	Indoor unit capacity	0000 : Unfixed 0001 to 0034	According to capacity type
12	Line address	0001 : No.1 unit to 0030 : No.30 unit	0099 : Unfixed
13	Indoor unit address	0001 : No.1 unit to 0064 : No.64 unit	0099 : Unfixed
14	Group address	0000 : Individual 0001 : Header unit of group 0002 : Follower unit of group	0099 : Unfixed
19	Flap type (Adjustment of air direction)	0000 : Not provided 0001 : Swing only 0004 : [4-way Air Discharge Cassette type] and [Under Ceiling type]	According to type
1E	Temp difference of automatic cooling/ heating mode selection COOL → HEAT,HEAT,→COOL	0000 : 0 deg to 0010 : 10deg (For setup temperature, reversal of COOL/HEAT by ± (Data value)/2)	0003 : 3 deg (Ts±1.5)
28	Automatic reset of power failure	0000 : None 0001 : Reset	0000 : None
29	Operation condition of humidifier	0000 : Usual 0001 : Condition ignored (Detection control for heat exchanger temperature)	0000 : Usual
2A	Selection of option/ error input (CN70)	0000 : Filter input 0001 : Alarm input (Air washer, etc.) 0002 : Humidifier input	0002 : Humidifier
2E	HA terminal (CN61) select	0000 : Usual 0001 : Leaving-ON prevention control	0000 : Usual (HA terminal)
30	Automatic elevating grille	0000 : Unavailable (Standard, Oil guard panel) 0001 : Available (Auto grille, Oil guard, Auto grille panel)	0000 : Unavailable
31	Ventilating fan control	0000 : Unavailable 0001 : Available	0000 : Unavailable
32	TA sensor selection	0000 : Body TA sensor 0001 : Remote controller sensor	0000 : Body TA sensor
33	Temperature unit select	0000 : °C (at factory shipment) 0001 : °F	0000 : °C
40	Control for humidifier (+ drain pump control)	0000 : None 0001 : Humidifier + Vaporizing system (Pump ON) 0002 : Humidifier + Ultrasonic system (Pump ON after specified time passed) (Unused) 0003 : Humidifier + Natural drain system (Pump OFF)	0003 : Humidifier ON, Pump OFF
5d	High ceiling selection (Air volume selection)	[4-way Air Discharge Cassette type] and [Under Ceiling type] 0000 : Standard filter 0001 : Super-long life [Concealed Duct Standard type] 0000 : Standard static pressure (40Pa) 0001 : High static pressure 1 (70Pa) 0003 : High static pressure 2 (100Pa) 0005 : Correspond to quiet sound 0006 : Low static pressure (20Pa)	0000 : Standard
60	Timer set (Wired remote controller)	0000 : Available (Operable) 0001 : Unavailable(Operation prohibited)	0000 : Available
62	Smudging-proof control clear	0000 : Clear	4- way Air Discharge Cassette type only
92	Outside interlock release condition	0000 : Operation stop 0001 : Release communication signal receive	0000 : Operation stop

Function to Start/Stop (ON/OFF) Indoor Unit from Outdoor Unit

The following functions of the indoor unit can start or stop by the switches on the interface P.C. board of the header unit.

No.	Function	Outline	Setup/Release	7-segment display
1	Cooling test operation	Changes the mode of all the connected indoor units collectively to cooling test operation. Note) Control operation same as usual test operation from remote control is performed.	[Setup] Push SW04 for 2 seconds or more with SW01"2", SW02"5", SW03"1". [Release] Return SW01, SW02, SW03 to "1".	Section A [C] Section B [–C]
2	Heating test operation	Changes the mode of all the connected indoor units collectively to heating test operation. Note) Control operation same as usual test operation from remote control is performed.	[Setup] Push SW04 for 2 seconds or more with SW01"2", SW02"6", SW03"1". [Release] Return SW01, SW02, SW03 to "1".	Section A [H] Section B [–H]
3	Batch start	Starts all the connected indoor units collectively. Note) The contents follow to the setup of remote controller.	[Setup] Push SW04 for 2 seconds or more with SW01"2", SW02"7", SW03"1". [Release] Return SW01, SW02, SW03 to "1".	Section A [CH] Section B [11] [11] is displayed on Section B for 5 seconds.
	Batch stop	Stops all the connected indoor units collectively.	[Setup] Push SW05 for 2 seconds or more with SW01"2", SW02"7", SW03"1". [Release] Return SW01, SW02, SW03 to "1".	Section A [CH] Section B [00] [00] is displayed on Section B for 5 seconds.
4	Individual start	Starts the specified indoor unit. Notes) • The contents follow to the setup of remote controller. • The other indoor units keep the status as they are.	[Setup] Push SW04 for 2 seconds or more set SW01 "16" and set SW02 and SW03 to address No. (1 to 64) to be started. [Release] Return SW01, SW02, SW03 to "1".	Section A [ ] Section B [ ] Section A: Displays the corresponding indoor address. Section B: Displays [11] for 5 seconds from operation-ON.
	Individual stop	Stops the specified indoor unit. Note) The other indoor units keep the status as they are.	[Setup] Push SW05 for 2 seconds or more set SW01 "16" and set SW02 and SW03 to address No. (1 to 64) to be stopped. [Release] Return SW01, SW02, SW03 to "1".	Section A [ ] Section B [ ] Section A: Displays the corresponding indoor address. Section B: Displays [00] for 5 seconds from operation-OFF.
	Individual test operation	Operates the specified indoor unit. Note) The other indoor units keep the status as they are.	[Setup] Push SW04 for 10 seconds or more set SW01 "16" and set SW02 and SW03 to address No. (1 to 64) to be operated. [Release] Return SW01, SW02, SW03 to "1".	Section A [ ] Section B [ ] Section A: Displays the corresponding indoor address. Section B: Displays [FF] for 5 seconds from test operation-ON.

NOTE 1) This start/stop function only sends the signals from the outdoor unit to the indoor unit, such as start, stop, operation mode, etc. It does not resend the signals even if the indoor unit does not follow the sent signals.

NOTE 2) The above controls are not used during abnormal stop.

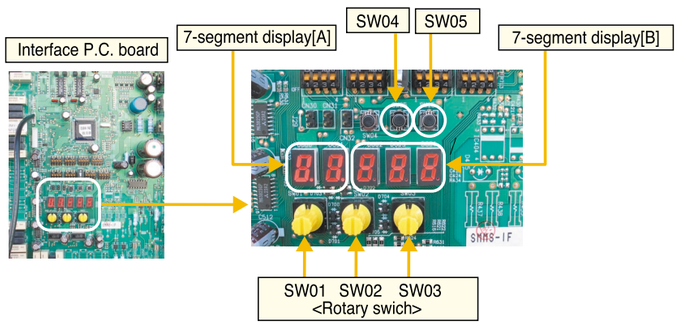

1 Data display of system information (Displayed on the header outdoor unit only)

SW01	SW02	SW03	Display contents				
1	1	3	Refrigerant name	Displays refrigerant name.		A	B
				Model with refrigerant R410A		r4	10A
				Model with refrigerant R407C		r4	07C
	2		System capacity	A	[5] to [48] :5 to 48HP		
				B	[HP]		
	3		No. of outdoor units	A	[1] to [4] :1 to 4 units		
				B	[P]		
	4		No. of connected indoor units/ No. of units with cooling thermo ON	A	[0] to [48] : 0 to 48 units (No. of connected units)		
				B	[C0] to [C48] : 0 to 48 units (No. of units with cooling thermo ON)		
	5		No. of connected indoor units/ No. of units with heating thermo ON	A	[0] to [48] : 0 to 48 units (No. of connected units)		
				B	[H0] to [H48] :0 to 48 units (No. of units with heating thermo ON)		
	6		Compressor command correction amount	A	Data is displayed with hexadecimal notation		
				B			
	7		Release control	A	Normal time :[r], During release control: [r1]		
				B	—		
	8		Oil-equalization control	A	Normal time :[oiL-0]		
				B	During oil equation : [oiL-1]		
	9		Oil-equalization request	A	Displays with segment LED lighting pattern		
				B	Display A / Display B A, B, C, D, E, F, G, Dp U2 U3 U4 F in the left figure goes on: Header requests oil equalization. C in the left figure goes on: Follower requests oil-equalization. (Outdoor unit number)		
	10		Refrigerant/oil recovery operation	A	During sending of cooling refrigerant oil recovery signal : [C1]. Normal time :[C]		
				B	During sending of heating refrigerant oil recovery signal : [H1]. Normal time :[H]		
	11		Automatic address	A	[Ad]		
				B	Automatic addressing : [FF], Normal time : [ ]		
	12		Demand operation	A	[dU]		
				B	Normal time :[ ]. In 50% to 90% : [50 to 90] When controlling by communication line input : [E50 to E90]		
	13		Optional control (P.C. board input)	Displays optioned control status		A	B
				Operation mode selection : In heating with priority (Normal)		h.*	*.*.*.
					Priority on cooling	c.*	*.*.*.
					Heating only	H.*	*.*.*.
					Cooling only	C.*	*.*.*.
					Priority on No of operating indoor units.	n.*	*.*.*.
					Priority on specific indoor unit	U.*	*.*.*.
				Batch start/stop :Normal		*.···.	*.*.*.
					Start input	*.1.	*.*.*.
					Stop input	*.0.	*.*.*.
				Night low-noise operation : Normal		*. *.	···.*.*.
					Operation input	*. *.	1.*.*.
				Snow fan operation : Normal		*. *.	*.···.*.
					Operation input	*. *.	*.1.*.
	14		Option control (BUS line input)		Same as above		
	15		Unused				
	16		—	A	—		
				B	—		

*mark: Indicates none on display

2 Data display of outdoor unit information (Displayed on each outdoor unit)

SW01	SW02	SW03	Display contents				
1	1	1	Error data	A	Displays outdoor unit number: [U1] to [U4]		
				B	Displays check code (Latest code only is displayed.) There is no check code: [– – –] There is sub-code: Check code [* * *] for 3 seconds, sub-code [– * *] for 1 second alternately		
			<SW04> push function : Fan of unit with error only drives. 7-segment A: [E1] <SW04 + SW05> push function : Fan of normal unit only drives. 7-segment A: [E0] <SW05> push function : Interruption of fan operation function				
	2		—	A	—		
				B	—		
	3		Operation mode	A	Stop: [ ] Normal cooling: [C], Normal heating: [H], Normal defrost: [J]		
				B	—		
	4		Outdoor unit HP	A	5HP: [5], 6HP: [6], 8HP: [8], 10HP: [10], 12HP: [12]		
				B	[HP]		
	5		Compressor operation command	A	No.1 compressor operation command is displayed. Data display with Hexadecimal notation: [00 to FF]		
				B	No.2 compressor operation command is displayed. Data display with Hexadecimal notation: [00 to FF]		
			<SW04> push function : Inverter frequency is exchanged to decimal notation. 7-segment display (A/B) : [**] [** H] (Normal display by pushing <SW05>)				
	6		Outdoor fan step	A	[FP]		
				B	Step 0 to 31: [0 to 31]		
	7		Compressor backup	A	Displays No.1 compressor setup status Normal: [ ], Backup setup: [C1]		
				B	Displays No.2 compressor setup status Normal: [ ], Backup setup: [C2]		
	8		—	A	—		
				B	—		
	9		Control valve output data	Displays control output status of solenoid valve		A	B
				4-way valve: ON		H. 1	··· ··· ···
				4-way valve: OFF		H. 0	··· ··· ···
	10			SV2: ON / SV5: OFF		2. 1	··· 5. 0
				SV2: OFF / SV5: ON		2. 0	··· 5. 1
	11			SV3A: ON / SV3B: OFF / SV3C: OFF /SV3D: OFF		3. 1	0 0 0
				SV3A: OFF / SV3B: ON / SV3C: OFF /SV3D: OFF		3. 0	1 0 0
				SV3A: OFF / SV3B: OFF / SV3C: ON /SV3D: OFF		3. 0	0 1 0
				SV3A: OFF / SV3B: OFF / SV3C: OFF /SV3D: ON		3. 0	0 0 1
	12			SV41: ON / SV42: OFF		4. ···	1 0 ···
				SV41: OFF / SV42: ON		4. ···	0 1 ···
	13			—		··· ···	··· ··· ···
				—		··· ···	··· ··· ···
	14		PMV1 /PMV2 opening	Displays opening data (Decimal) (Total opening)		* *	* *. P
	15		—	—		··· *1	* *. P
	16		Oil level judgment status	A	[oL] <SW05> push SW function: The following data is displayed for 2 seconds. * During oil shortage in compressor 1: [L···], during oil shortage in compressor 2: [··· L]		
				B	Initial display: [··· ··· ···], Oil level judgment result: [A. #. *] Judgment result of compressor 1 in [#], compressor 2 in [*] (0: Normal, 1, 2: Shortage) is displayed.		

3 Data display of outdoor cycle (Displayed on each outdoor unit)

SW01	SW02	SW03	Display contents			A	B
1	1	2	Pd pressure data	Pd pressure (MPaG) is displayed with decimal data. (MPaG: Approx. 1/10 value of kg/cm^{2}G data)		A	B
						P d.	*. * *
	2		Ps pressure data	Ps pressure (MPaG) is displayed with decimal data.		P S.	*. * *
	3		PL pressure conversion data	Estimated pressure of liquid line (MPaG) is displayed with decimal data.		P L.	*. * *
	4		TD1 sensor data	Temperature sensor data (°C) is displayed with decimal notation. • Symbol displayfor 1 sec. and data display for 3 sec. are alternately displayed. • Data is displayed in [*]. • Negative data is displayed as [– * * * *].	Symbol	t d	1
					Data	*	* *. *
	5		TD2 sensor data		Symbol	t d	2
					Data	*	* *. *
	6		TS sensor data		Symbol	t S	
					Data	*	* *. *
	7		TE sensor data		Symbol	t E	
					Data	*	* *. *
	8		–		Symbol	–	–
					Data	–	–
	9		TL sensor data		Symbol	t L	
					Data	*	* *. *
	10		TO sensor data		Symbol	t o	
					Data	*	* *. *
	11		TK1 sensor data		Symbol	F 1	
					Data	*	* *. *
	12		TK2 sensor data		Symbol	F 2	
					Data	*	* *. *
	13		TK3 sensor data		Symbol	F 3	
					Data	*	* *. *
	14		TK4 sensor data		Symbol	F 4	
					Data	*	* *. *

4 Data display of outdoor cycle (Displayed on the header unit)

* This method is used when information of the follower unit is displayed on 7-segment display of the header unit.

SW01	SW02	SW03	Display contents		
3	1	1 to 3	Error data	A	[U.*] * : SW03 setup number + 1 number (Outdoor unit number U2 to U4)
				B	Check code is displayed. (Latest check code only) No check code: [– – –]
	2		Installed compressor type	A	[U.*] * : SW03 setup number + 1 number (Outdoor unit number U2 to U4)
				B	
	3		Outdoor unit capacity	A	[U.*] * : SW03 setup number + 1 number (Outdoor unit number U2 to U4)
				B	8HP: [··· ··· 8]. 10HP: [··· 1 0], 5 to 12HP
	4		Compressor operation command	A	[U.*] * : SW03 setup number + 1 number (Outdoor unit number U2 to U4)
				B	No.1 compressor ON: [C10], No.2 compressor ON: [C01] For unconnected compressor, " – " is displayed.
	5		Fan operation mode	A	[U.*] * : SW03 setup number + 1 number (Outdoor unit number U2 to U4)
				B	Stop time: [F ··· 0], Mode 31: [F 3 1]
	6		Release signal	A	[U.*] * : SW03 setup number + 1 number (Outdoor unit number U2 to U4)
				B	Normal time: [r ··· ···], Release received: [r ··· 1]
	7		Oil level judgment	A	[U.*] * : SW03 setup number + 1 number (Outdoor unit number U2 to U4)
				B	Normal time: [··· ··· ···], Oil shortage: [··· ··· L]

NOTE) The follower unit is setup by changing SW03.

SW03	1	2	3
7-segment display A	U2	U3	U4

5 Data display of indoor unit information (Displayed on the header unit only)

SW01	SW02	SW03	Display contents		
4	1 to 16	1 to 3	Receiving status of indoor BUS communication	B	Receiving time: [··· ··· 1], Not received: [··· ··· ···]
5			Indoor check code	B	No check code: [– – –]
6			Indoor capacity (HP) horse power	B	0. 2, 0. 5, 0. 8, ··· 1, 1. 2, 1. 7, ··· 2, 2. 5, ··· 3, 3. 2, ··· 4, ··· 5, ··· 6, ··· 8, 1 0, 1 6, 2 0
7			Indoor request command (S code)	B	Data is displayed with Hexadecimal notation [··· ··· 0 to ··· ··· F] : Heating
8			Indoor PMV opening data	B	Data is displayed with Hexadecimal notation
9			Indoor TA sensor data	B	Data is displayed with Hexadecimal notation
10			Indoor TF sensor data	B	Data is displayed with Hexadecimal notation
11			Indoor TCJ sensor data	B	Data is displayed with Hexadecimal notation
12			Indoor TC1 sensor data	B	Data is displayed with Hexadecimal notation
13			Indoor TC2 sensor data	B	Data is displayed with Hexadecimal notation

NOTE) Indoor address No. is chosen by changing SW02 and SW03.

SW03	SW02	Indoor address	7-segment display A
1	1 to 16	SW02 setup number	[01] to [16]
2	1 to 16	SW02 setup number + 16	[17] to [32]
3	1 to 16	SW02 setup number + 32	[33] to [48]

6 Outdoor EEPROM write-in error code display (Displayed on the header unit only)

The latest error code written in EEPROM of each outdoor unit is displayed.
(It is used when confirming the error code after power supply has been reset.)
Set SW01 to 03 as shown in the following table, and the push SW04 for 5 seconds or more to display an error code.

SW01	SW02	SW03	Display contents	7-segment display	
				A	B
1	1	16	The latest error code of the header unit 1 (U1)	E. r	1. – –
	2		The latest error code of the follower unit 1 (U2)	E. r	2. – –
	3		The latest error code of the follower unit 2 (U3)	E. r	3. – –
	4		The latest error code of the follower unit 3 (U4)	E. r	4. – –

7 Service support function list

SW01	SW02	SW03	7-segment display [A]	Function contents
2	1	1	[J C]	Refrigerant circuit and control communication line check function (Cooling operation)
	2		[J H]	Refrigerant circuit and control communication line check function (Heating operation)
	3		[P]	Indoor PMV forced full open function
	4		[A 1]	Indoor remote controller discriminating function
	5		[C]	Cooling test operation function
	6		[H]	Heating test operation function
	7		[C H]	Indoor collective start/stop (ON/OFF) function
	11		[r d]	Outdoor refrigerant recovery operation function (Pump down function)
	16		[E r]	Error clear function
2		3	[H r]	Solenoid valve forced open/close function
2	1 to 16	4 to 5	[F d]	Fan forced operation function
2		15	[t o]	Outside temp sensor manual adjustment function
16	1 to 16	1	[0 1] to [1 6]	Indoor No. 1 to 16 unit — Indoor individual start/stop (ON/OFF) function
		2	[1 7] to [3 2]	Indoor No.17 to 32 unit
		3	[3 3] to [4 8]	Indoor No.33 to 48 unit
		4	[4 9] to [6 4]	Indoor No.49 to 64 unit

SW01	SW-2	SW03	7-segment display [A/B]	Function contents
1	1	1	[U 1] [E28]	Follower unit error / Corresponding unit fan operation function

8 Pulse Motor Valve (PMV) Forced Open Fully/Close fully Function in Outdoor Unit

This function is provided to forcedly open or close fully P.M.V. (PMV1/PMV2) used in the outdoor unit for 2 minutes.

[Open fully]
Short-circuit for CN30 on the outdoor interface P.C. board.

[Close fully]
Short-circuit for CN31 on the outdoor interface P.C. board.

[Clear]
After 2 minutes, the opening returns to the normal opening.
Be sure to remove the short-circuited (as short pin, etc.) after confirmation.

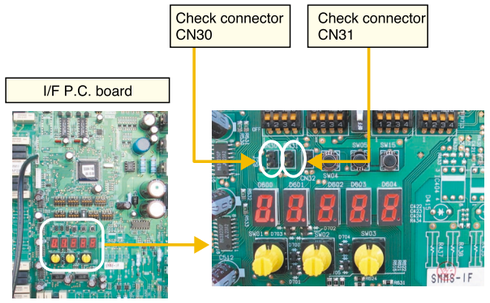

9 Solenoid Valve Forced Open/Close Function in Outdoor Unit

This function is provided to forcedly open each solenoid valve mounted in the outdoor unit by the switch operation on the interface P.C. board in the outdoor unit to using this function, check there is no refrigerant clogging with ON/OFF operation of the solenoid valve.

Operation

1. Set the switch on the interface P.C. board SW01 to [2], SW02 to [1], SW03 to [3].
2. When [H.] is displayed in 7-segment display [A], keep pushing the switch SW04 for 2 seconds or more.
3. From when [2] is displayed in 7-segment display [B], SV2 is turned on.
4. After then, ON and OFF of each solenoid valve are exchanged by changing the setup number of the switch SW02. (ON/OFF output pattern of each solenoid valve is as below.)

NOTE 1) Display in 7-segment display [B] is exchanged just when the number of SW02 has been changed, on the other hand, the solenoid valve output is exchanged when SW02 has kept with the same number for 5 seconds or more.
NOTE 2) The mark [○] in the table indicates the corresponding solenoid valve is forcedly turned on.
NOTE 3) The mark [–] in the table indicates ON/OFF of the solenoid valve is controlled based upon the specifications of the air conditioner.
NOTE 4) The mark [●] in the table indicates the corresponding solenoid valve is forcedly turned off with this operation.
NOTE 5) The case heater outputs heat air for both compressor and accumulator heaters.

SW02	7-segment display [B]	Operation pattern of solenoid valve									Case heater output relay
		SV2	SV5	SV41	SV42	SV3A	SV3B	SV3C	SV3D	SV3E	
1	[2]	○	–	–	–	–	–	–	–	○	○
2	[5]	–	○	–	–	–	–	–	–	○	○
3	[4–]	–	–	○	○	–	–	–	–	○	○
4	[3A]	–	–	–	–	○	–	–	–	○	○
5	[3b]	–	–	–	–	–	○	–	–	○	○
6	[3C]	–	–	–	–	–	–	○	–	○	○
7	[3d]	–	–	–	–	–	–	–	○	○	○
8	[3E]	–	–	–	–	–	–	–	–	●	○
9	[3–]	–	–	–	–	○	○	○	–	–	○
10 to 15	[ ]	–	–	–	–	–	–	–	–	○	○
16	[ALL]	○	○	○	○	○	○	○	○	○	○

[Clear] Return numbers of SW01, SW02, and SW03 on the interface P.C. board to [1/1/1] each.
NOTE) As this function is not based on the specified general control, be sure to release this mode after operation.

Abnormal Outdoor Unit Discrimination Method <By Fan Operating Function>

This function is provided to forcedly operate the fan of the outdoor unit in which an error occurred or the fan of the normal outdoor unit by the switch operation on the interface P.C. board in the header unit.
To specify which one of the follower units connected to the system was faulty, use this function for the system stop due to a follower unit fault (Check code [E28]).

Operation

<In case to operate the fan in the erroneous outdoor unit only>

1. Check all the switches, SW01, SW02, and SW03 on the interface P.C. board in the header unit are set to [1].

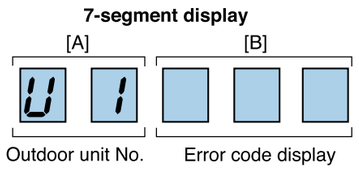

2. Push the push-switch SW04 for 2 seconds or more.
3. “E 1” is displayed on 7-segment display [A].
4. The fan of the outdoor unit in which error occurred starts operation within approx. 10 seconds when “E 1” was displayed.

<In case to operate the fans in all the normal outdoor units>

1. Check all the switches, SW01, SW02, and SW03 on the interface P.C. board are set to [1/1/1].
2. Push the push-switches SW04 and SW05 at the same time for 2 seconds or more.
3. “E 0” is displayed on 7-segment display [A].
4. The fans of all the normal outdoor units start operation with the Max. fan speed within approx. 10 seconds when “E 0” was displayed.

[Release]

Push the push-switch SW05 on the interface P.C. board in the header unit for 2 seconds or more.
The outdoor fan which was operated stops.
* Check [U. 1] is displayed on 7-segment display [A], and then finish the work.

Pulse Motor Valve (PMV) Forced Open/Close Function in Indoor Unit

This function is provided to open or close forcedly PMV for 2 minutes in all the indoor units by the switch operation on the interface P.C. board of the header unit.
This function is also used to open PMV fully when turning off the power and executing an operation.

Operation

[Open fully]

Set the switch SW01 on the interface P.C. board of the header unit to [2], SW02 to [3], SW03 to [1], and push SW04 for 2 seconds or more.
(Display appears on 7-segment display for 2 minutes as follows.) [P] [FF]

[Close fully]

Set the switch on the interface P.C. board of the header unit SW01 to [2], SW02 to [3], SW03 to [1], and push SW05 for 2 seconds or more.
(Display appears on 7-segment display for one minute as follows.) [P] [00]

[Clear]

After 2 minutes (1 minutes for “Close fully”) passed when setup has finished, the opening automatically returns to the normal opening.

When a trouble occurred at an outdoor unit or at one of the compressors in outdoor unit, the troubled unit or troubled compressor stops and a backup operation (emergency operation) is available by other outdoor units and the compressors. Set up a backup operation following to the procedure below.

Before Backup Operation

Method of the backup operation differs by the contents of the trouble. Refer to the following table.

Trouble contents	Backup operation method	Setup procedure
When a trouble occurred on one of the compressors in the same unit (Note 1)	Compressor backup	To item 2
When troubles occurred on the both compressors in the same unit	Outdoor unit backup or outdoor unit backup during cooling season (Note 2)	To item 3 or item 4
Trouble of compressor coil (Such as defect of compressor coil)		
When a trouble occurred on refrigerating system parts, fan system parts, or electoric system parts		
When a trouble occurred on temperature sensor or pressure sensor		

(Note 1) When a trouble of compressor coil, etc occurred, deterioration of the oil is heavy.
Therefore do not perform a backup operation; otherwise a trouble of the other outdoor units may be caused.
(Note 2) The outdoor unit to be processed with a backup operation should be restricted to one unit in the system of 1 system.

Compressor Backup Setup

Outline

When a trouble occurred on one of the two compressors, follow the procedure below if it is necessary to perform a backup operation by the other normal compressor.

Work procedure

1. Turn off the main power supplies of all the units connected to the system.
2. Set up the switch SW06 on the interface P.C. board of the outdoor unit with failure compressor as shown below.

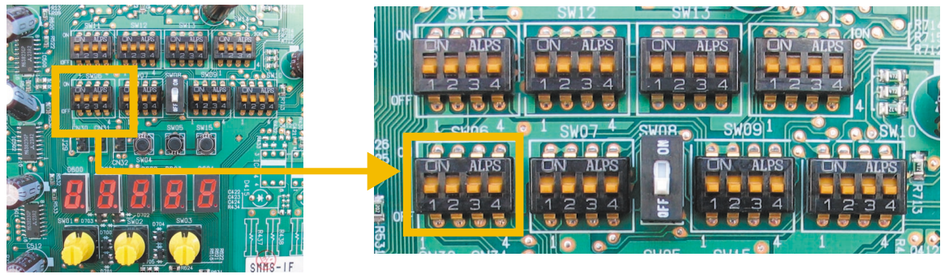

	SW06			
	Bit1	Bit2	Bit3	Bit4
Initial setup at shipment from factory	OFF	OFF	OFF	OFF
No.1 compressor (Left side) is defective.	ON	OFF	OFF	OFF
No.2 compressor (Right front side) is defective.	OFF	ON	OFF	OFF

3. Turn on the main power supplies of all the units connected to the system.

Then setup operation for the compressor backup finishes.

Outdoor Unit Backup Setup

Outline

Against a case that a trouble occurs on the outdoor unit, backup operation can be set up to either header unit or follower unit. For the multiple outdoor unit system (Failure of compressor coil), perform an outdoor unit backup operation if the following error modes occurred.

- Trouble on compressor
- Trouble on pressure sensor (Pd, Ps) /temperature sensor (TD1, TD2, TS1, TE1, TK1, TK2, TK3, TK4, TL)

Note: Backup of the outdoor unit should be restricted to one unit in one system.

1 In case of Trouble on Follower Outdoor Unit (Backup setup for follower outdoor unit)

Work procedure

1. Turn off the main power supplies of all the units connected to the system.

[Setup for outdoor unit with trouble]

2. Close fully the gas side service valve of the unit with trouble.
3. Leave service valve of the balance pipe of the liquid pipe opened. (To prevent refrigerant stagnation in the unit) However close fully service valve of the liquid pipe when there is PMC leakage in outdoor unit (PMV does not close.).
4. <In case of trouble on the compressor or electric parts system (Compressor, electric system parts, I/F P.C. board, IPDU P.C. board)>
   After then, keep OFF for the main power supply of the unit with trouble.
   <In case of trouble on the refrigerant circuit parts system (Pressure sensor, temperature sensor, refrigerat circuit parts,fan system parts)>
   Remove the communication (BUS2) connector [CN03] between outdoor units on the interface P.C. board.

Setup for outdoor unit with trouble

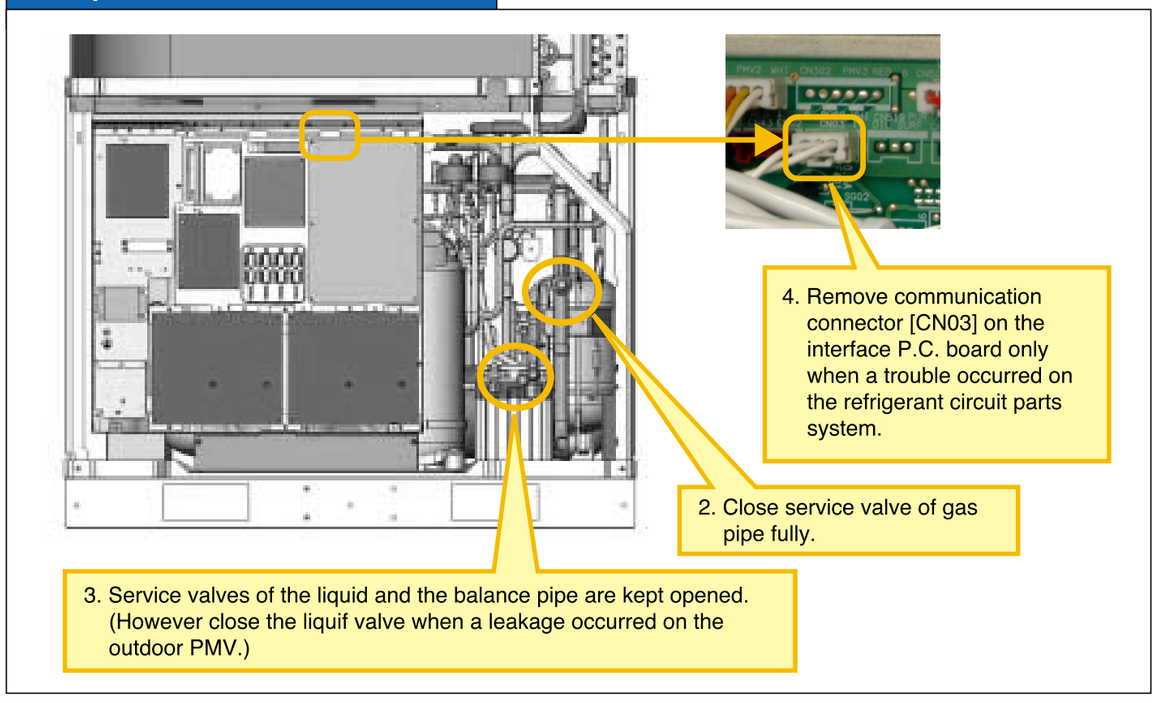

[Setup for header unit]

5. Turn on Bit 2 of the Dip SW09 on the interface P.C. board of the header unit.
(Setup not to detect the indoor capacity over)

6. Turn on the power supplies of all the units other than the unit with trouble.
As for power supply of the unit with trouble, follow the procedure below.
<In case of trouble on the compressor or electric parts system (Compressor, electric system parts, I/F P.C. board, IPDU P.C. board)> Keep OFF for the main power supply of the unit.
<In case of trouble on the refrigerant circuit parts system (Pressure sensor, temperature sensor, refrigerant circuit parts, fan system parts> Turn on the power supply to protect the compressor. (Case heater ON) (Although [E19] (Outdoor header unit quantity error) is displayed on 7-segment display after turning on the power supply of the unit, it is not a problem because it is only interruption of communication with the header unit.)

Interface P.C. board of the header unit

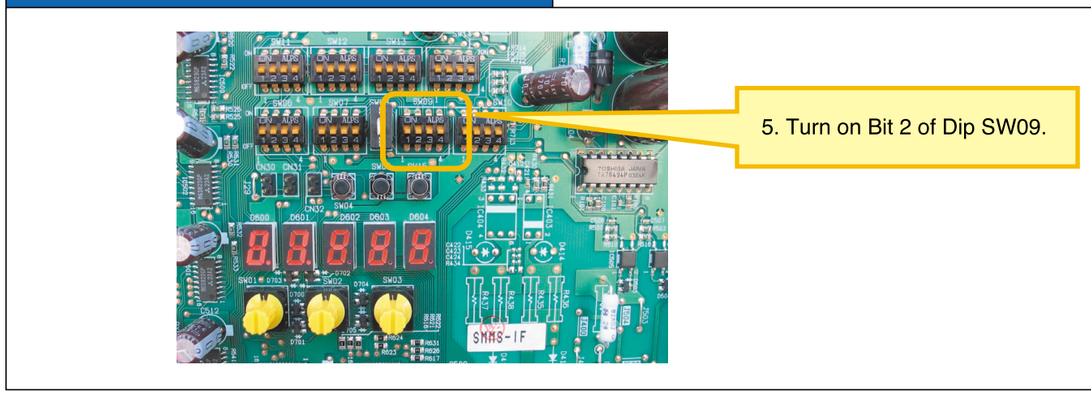

[Setup for the header unit]

7. Error clear is set up from the header unit.
   1) Check [U1] [E26] (Decrease of No. of connected outdoor units) is displayed on 7-segment display under condition that the rotary switches SW01/02/03 are set to 1/1/1 on the interface P.C. board.
   2) Set the rotary switches SW01/02/03 on the interface P.C. board to 2/16/1, and then push the push SW04 for 5 seconds or more after [Er] [ ] have been displayed on 7-segment display.
   3) [Er] [CL] are displayed on 7-segment display. (Error clear completes.)
   4) Return SW01/02/03 to 1/1/1. (It is normal if [U1] [– – –] are displayed.)

Interface P.C. board of the header unit

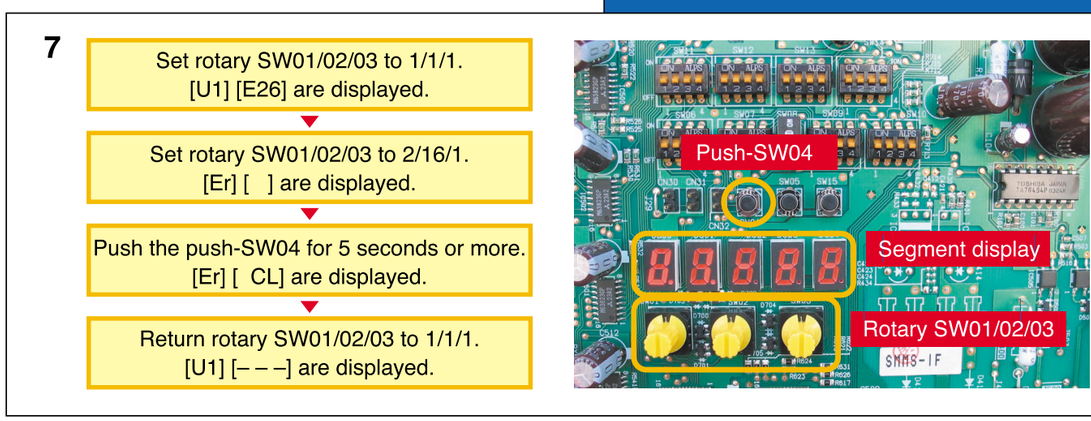

All the backup setup for the header unit has completed. Check the operation.

2 In Case of Trouble on Header Unit (Backup setup for header unit)

Work procedure

1. Turn off the main power supplies of all the units connected to the system.

[Setup for outdoor unit with trouble]

2. Close fully the gas side service valve of the unit with trouble.
3. Leave service valve of the balance pipe and the liquid pipe fully opened. (To prevent refrigerant stagnation in the unit)
   However close fully service valve of the liquid pipe when there is PMV leakage in outdoor unit
   (When PMV can not be closed fully)
4. <In case of trouble on the compressor or electric parts system (Compressor, electric system parts, I/F P.C. board, IPDU P.C. board)>
   After then, keep OFF for the main power supply of the unit with trouble.
   <In case of trouble on the cycle parts system (Pressure sensor, temperature sensor, refrigerat circuit parts, fan system parts)>
   Remove the communication (Refrigerant circuit) connector [CN03] between outdoor units on the interface P.C. board.

Setup for outdoor unit with trouble

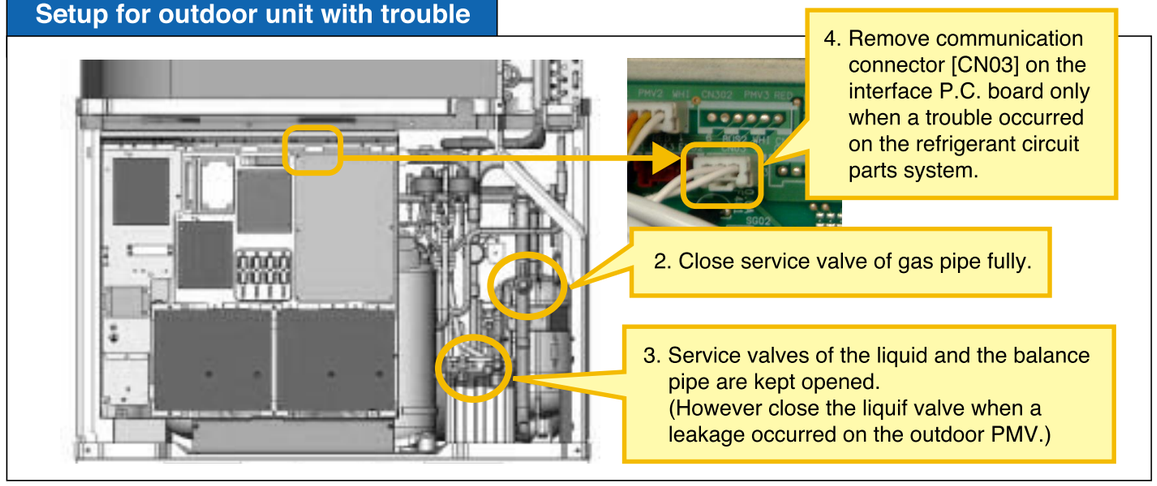

[Selection of header unit]

5. Select a header unit among the follower units based upon the following criteria.
- If only one follower unit is connected, select it as the header unit.
- When two or more follower units are connected, select an outdoor unit nearest to the header unit as the header unit.

[Setup for the unit selected as the header unit]

6. Match the setup of SW13 and SW14 on the interface P.C. board with SW setup of the unit with trouble.
   (Refrigerant system address setup)
7. Turn on Bit 2 of SW09 on the interface P.C. board. (Setup not to detect the indoor capacity over)
8. Match the setup of SW30 Bit 1 and 2 on the interface P.C. board with SW setup of the unit with trouble.
   (Setup for end terminal resistance of communication)

Outdoor interface P.C. board of the unit selected as the header unit

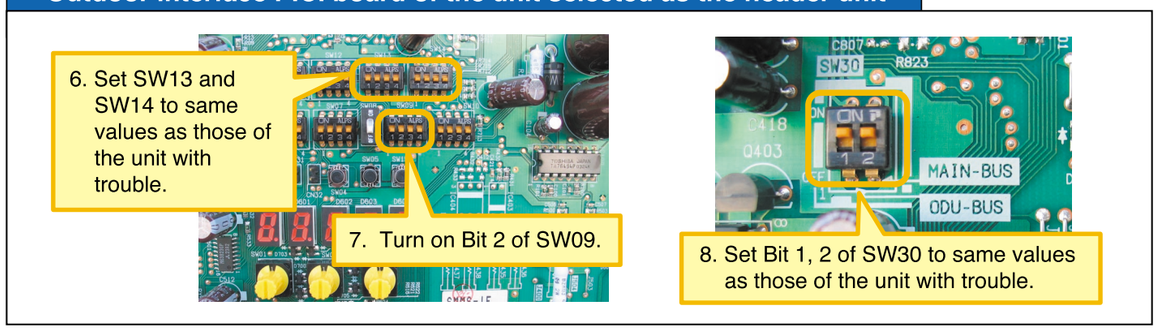

[Connection change of the communication line]

9. Change the communication line between outdoor and indoor from [U1, U2] terminal of the header unit with trouble to [U1/U2] of the unit selected as the header unit.
10. If a central control device is connected, connect the communication line [U3/U4] of the central control system to the communication line [U3/U4] terminal of the unit selected as the header unit, and connect a relay connector between [U1/U2] and [U3/U4] terminals.

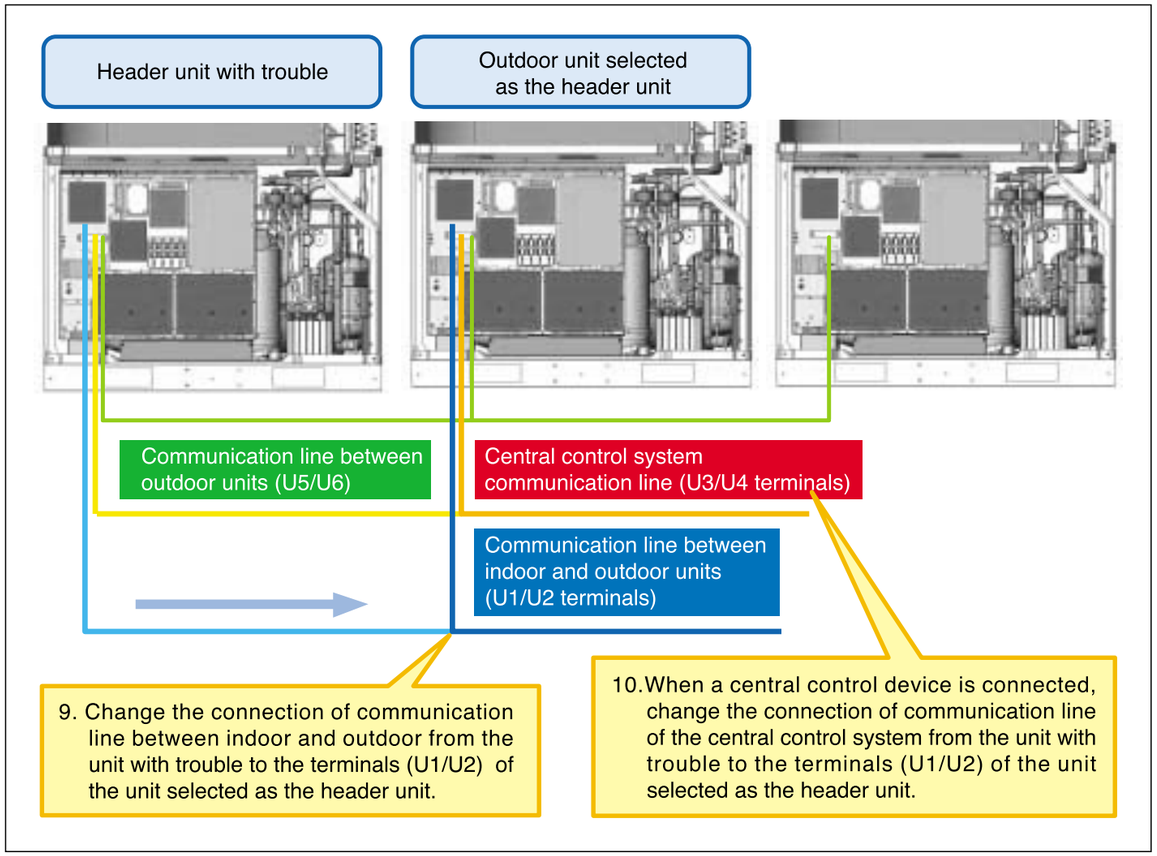

11. Turn on the power supplies of each outdoor unit.
    Turn on the main power supplies of all the units other than the unit with trouble. As for power supply of the unit with trouble, follow the procedure below.
    Leave the main power supply of the unit with trouble as it is.
    <In case of trouble on the compressor or electric parts system (Compressor, electric system parts, I/F P.C. board, IPDU P.C. board)> Keep OFF for the main power supply of the unit.

    < In case of trouble on the refrigerant circuit parts system (Pressure sensor, temperature sensor, refrigerat circuit parts, fan system parts)> Turn on the main power supply to protect the compressor. (Case heater ON) (Although [E19] (Outdoor header unit quantity error) is displayed on 7-segment display after turning on the power supply of the unit, it is not a problem because it is only interruption of communication with the header unit.)

Then all the backup setup for the header unit has finished. Check the operation.